Marconi
Instruments

COMMUNICATIONS SERVICE MONITOR

2948

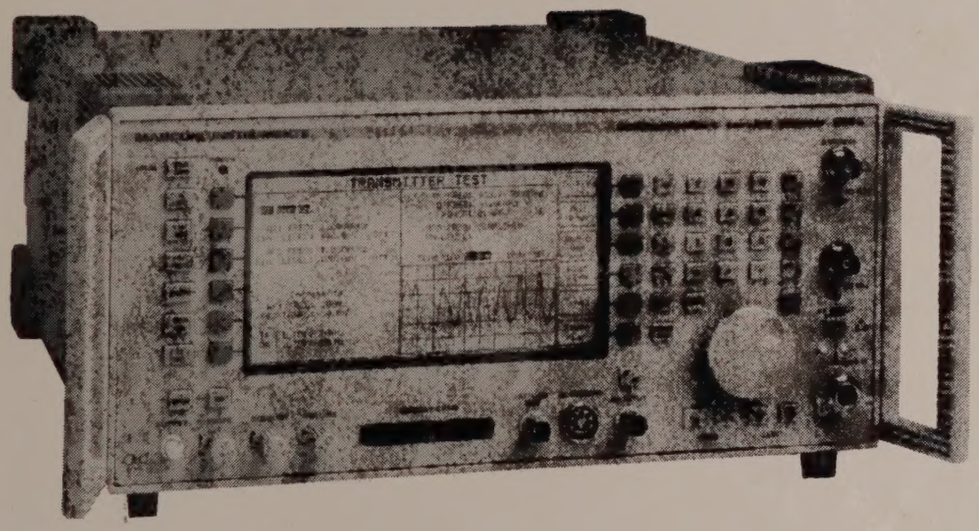

Maintenance Manual

46882-342W

COMMUNICATIONS SERVICE MONITOR

2948

© Marconi Instruments Ltd. 1997

No part of this book may be reproduced or transmitted in any form or by any means, electronic or mechanical, including photocopying, or recorded by any information storage or retrieval system, without permission in writing by Marconi Instruments Ltd.

Printed in the UK

Manual part no. 46882-342W
Issue 1

21 February 1997

About this manual

This manual provides servicing information to component level for the Communications Service Monitor 2948.

Intended audience

The book is intended for qualified service engineers and assumes a knowledge of the instrument to a level covered in Operating Manual 46882-341S.

Structure

Chapter 1 Technical description

This includes block diagrams and detailed board circuit descriptions. The circuit descriptions refer directly to the servicing diagrams contained in Chapter 7.

Chapter 2 Access and layout

Refer to this chapter for board and unit access, service policy and routine safety testing and inspection.

Chapter 3 Adjustment and calibration

Refer to this chapter for information on user calibrations, software calibrations and hardware adjustments.

Chapter 4 Initial repair

This chapter contains information regarding simple fault finding.

Chapter 5 Fault finding

The information in this chapter is in flow chart form, giving several levels of fault diagnosis information from very basic repair down to board component level.

Chapter 6 Replaceable parts

Contains board component parts and a section on miscellaneous (including mechanical) parts.

Chapter 7 Servicing diagrams

Contains interconnection drawings, board circuits and board component layout drawings.

Associated publications

Refer to the Operating Manual 46882-341S for an up to date list of associated publications.

Contents

		Tab numbers
Precautions		
Chapter 1	TECHNICAL DESCRIPTION	1
Chapter 2	ACCESS AND LAYOUT	2
Chapter 3	ADJUSTMENT AND CALIBRATION	3
Chapter 4	INITIAL REPAIR	4
Chapter 5	FAULT DIAGNOSIS	5
Chapter 6	REPLACEABLE PARTS	6
Chapter 7	SERVICING DIAGRAMS	7
ADDRESSES		8

Precautions

WARNING **CAUTION** **Note**

These terms have specific meanings in this manual:

WARNING **information to prevent personal injury.**

CAUTION **information to prevent damage to the equipment.**

Note **important general information.**

Symbols

The meaning of hazard symbols appearing on the equipment is as follows:

Symbol	Description
	General hazard
	Dangerous voltage
	Toxic hazard
	Hot surface
	Static sensitive components

General conditions of use

This product is designed and tested to comply with the requirements of EN61010-1/IEC1010-1 'Safety requirements for electrical equipment for measurement, control and laboratory use', for Class I portable equipment and is for use in a pollution degree 2 environment. The equipment is designed to operate from an installation category I or II supply.

Equipment should be protected from the ingress of liquids and precipitation such as rain, snow, etc. When moving the equipment from a cold to a hot environment, it is important to allow the temperature of the equipment to stabilise before it is connected to the supply to avoid condensation forming. The equipment must only be operated within the environmental conditions specified in Chapter 1 'Performance Data' in the Operating/Instruction manual.

This product is not approved for use in hazardous atmospheres. If the equipment is to be used in a safety-related application, the suitability of the product must be assessed and approved for use by a competent person.

WARNING

Electrical Hazards

AC supply voltage

This equipment conforms with IEC Safety Class 1, meaning that it is provided with a protective grounding lead. To maintain this protection the supply lead must always be connected to the source of supply via a socket with a grounded contact.

Be aware that the supply filter contains capacitors that may remain charged after the equipment is disconnected from the supply. Although the stored energy is within the approved safety requirements, a slight shock may be felt if the plug pins are touched immediately after removal.

Fuses

Note that the internal supply fuse is in series with the live conductor of the supply lead. If connection is made to a 2-pin unpolarized supply socket, it is possible for the fuse to become transposed to the neutral conductor, in which case, parts of the equipment could remain at supply potential even after the fuse has ruptured.

Removal of covers

Disconnect the supply before removing the covers so as to avoid the risk of exposing high voltage parts. If any internal adjustment or servicing has to be carried out with the supply on, it must only be performed by a skilled person who is aware of the hazard involved.

WARNING

Fire Hazard

Make sure that only fuses of the correct rating and type are used for replacement.

If an integrally fused plug is used on the supply lead, ensure that the fuse rating is commensurate with the current requirements of this equipment.

WARNING

Toxic Hazards

Some of the components used in this equipment may include resins and other materials which give off toxic fumes if incinerated. Take appropriate precautions, therefore, in the disposal of these items.

Lithium

A Lithium battery (or a Lithium battery contained within an IC) is used in the following components in this equipment:

IC10	B2	46829/936
IC10	B2/1	46830/110
See below †	B3/1	46830/181.
IC9	B9	46830/074.

† When B3/1 board is fitted to provide the option 2 facilities, a 3.5 V Lithium Thionyl Chloride battery is fitted to the top tray of the Service Monitor adjacent to the audio proccessor board B1.

As Lithium is a toxic substance, the battery should in no circumstances be crushed, incinerated or disposed of in normal waste.

Do not attempt to recharge this type of battery. Do not short circuit or force discharge since this might cause the battery to vent, overheat or explode.

WARNING

Hot Surfaces

Take care when touching the RF Input Type N connector after the application of high levels of continuous power. If 50 W is exceeded for a prolonged period, the temperature of the connector can become excessive.

WARNING

Liquid crystal display module

Do not dismantle the display module.

The Liquid Crystal substance within the display panel used in this equipment is a toxic substance. If the display panel is damaged and any of the Liquid Crystal substance leaks out, do not allow it to come into contact with your mouth. If the substance comes into contact with your skin, immediately wash the affected areas with soap and water, and seek medical advice.

The display illumination is produced by a Cold Cathode Fluorescent Tube (CCFT). This contains a small amount of mercury gas which is a toxic substance.

Both the display panel and the CCFT are made of glass. Therefore do not subject the module to mechanical shocks which might cause fractures.

Do not dispose of these modules, or any part of them, in domestic waste. Use only approved waste disposal methods.

WARNING

Tilt Facility

When the instrument is in the tilt position, it is advisable, for stability reasons, not to stack other instruments on top of it.

CAUTION

Static Sensitive Components

The presence of static sensitive components is indicated in the equipment by yellow disks, flags or labels bearing the symbol . Certain handling precautions should be observed to prevent these components being permanently damaged by static charges or fast surges.

(1) If a printed board containing static sensitive components (as indicated by warning disk or flag) is removed, it must be temporarily stored in a conductive plastic bag.

(2) If a static sensitive component is to be removed or replaced, the following anti-static equipment should be used:

A **work bench** with a grounded conductive surface.

Metallic tools grounded either permanently or by repeated discharges.

A **low-voltage** grounded soldering iron.

A **grounded wrist strap** and a conductive **grounded seat cover** for the operator whose outer clothing should not be of man-made fibre.

(3) As a general precaution, avoid touching the leads of a static sensitive component. When handling a new one, leave it in its conducting mount until it is required for use.

(4) If using a freezer aerosol in fault finding, take care not to spray programmable ICs as this may affect their contents.

CAUTION

Input overload

On the RF N connector the input power should not exceed 150 W.

On the RF BNC ANTENNA the input power should not exceed 1 W.

On the RF BNC output connector, the input power should not exceed 1 W.

Précautions

WARNING **CAUTION** **Note**

Les termes suivants ont, dans ce manuel, des significations particulières:

WARNING contient des informations pour éviter toute blessure au personnel.

CAUTION contient des informations pour éviter les dommages aux équipements.

Note contient d'importantes informations d'ordre général.

Symboles signalant un risque

La signification des symboles liés à cet équipement est la suivante:

Symbole	Nature du risque
	Risques généraux
	Tension dangereuse
	Danger produits toxiques
	Surfaces chaudes

Conditions générales d'utilisation

Ce produit a été conçu et testé pour être conforme aux exigences des normes EN61010-1/CEI1010-1 "Règles de sécurité pour appareils électriques de mesurage, de régulation et de laboratoire", pour des équipements Classe I portables et pour une utilisation dans un environnement de pollution de niveau 2. Cet équipement est conçu pour fonctionner à partir d'une alimentation de catégorie I or II.

Cet équipement doit être protégé de l'introduction de liquides ainsi que des précipitations d'eau, de neige, etc... Lorsqu'on transporte cet équipement d'un environnement chaud vers un environnement froid, il est important de laisser l'équipement se stabiliser en température avant de le connecter à une alimentation afin d'éviter toute formation de condensation. L'doit être utilisé uniquement dans les conditions d'environnement spécifiées dans "Performance data" dans le chapitre 1 du manuel d'utilisation.

Ce produit n'est pas garanti pour fonctionner dans des atmosphères dangereuses. Si l'équipement doit être utilisé pour des applications liées à la sécurité, la compatibilité du produit doit être établie et approuvée par une personne compétente.

WARNING

Sécurité électrique (tension d'alimentation alternative)

Cet appareil est protégé conformément à la norme CEI de sécurité Classe 1, c'est-à-dire que sa prise secteur comporte un fil de protection à la terre. Pour maintenir cette protection, le câble d'alimentation doit toujours être branché à la source d'alimentation par l'intermédiaire d'une prise comportant une borne de terre.

Notez que les filtres d'alimentation contiennent des condensateurs qui peuvent encore être chargés lorsque l'appareil est débranché. Bien que l'énergie contenue soit conforme aux exigences de sécurité, il est possible de ressentir un léger choc si l'on touche les bornes sitôt après débranchement.

Fusibles

Notez que le fusible d'alimentation interne est en série avec la phase du câble d'alimentation. Si la prise d'alimentation comporte deux bornes non polarisées, il est possible de connecter le fusible au neutre. Dans ce cas, certaines parties de l'appareil peuvent rester à un certain potentiel même après coupure du fusible.

Retrait des couvercles

L'appareil doit être débranché avant de retirer les couvercles afin d'éviter tout contact avec les éléments haute tension. Si toutefois un réglage interne ou une réparation nécessitent la présence de l'alimentation, ils devront être effectués par une personne qualifiée et avisée des risques encourus.

WARNING

⚠ Risque lié au feu

Lors du remplacement des fusibles vérifiez l'exactitude de leur type et de leur valeur.

Si le câble d'alimentation comporte une prise avec fusible intégré, assurez vous que sa valeur est compatible avec les besoins en courant de l'appareil. Pour la consommation, reportez-vous au "Performance data" dans le chapitre 1 du manuel d'utilisation.

Danger produits toxiques

Certains composants utilisés dans cet appareil peuvent contenir des résines et d'autres matières qui dégagent des fumées toxiques lors de leur incinération. Les précautions d'usages doivent donc être prises lorsqu'on se débarrasse de ce type de composant.

WARNING

Lithium

Une pile au Lithium ou un CI contenant une pile au Lithium est utilisé dans les composants suivants:

IC10	B2	46829/936
IC10	B2/1	46830/110
Voir ci-dessous †	B3/1	46830/181.
IC9	B9	46830/074.

†Lorsque la carte B3/1, assurant les fonctions de l'option 2, est présente dans l'appareil, celui est équipé d'une batterie Lithium Thyonil Chloride de 3,5V située dans la partie supérieure du châssis à côté de la carte d'analyse audio B1.

Les piles au lithium présentent deux types de danger:

Le Lithium étant une substance toxique, il ne faut en aucun cas l'écraser, l'incinérer ou le jeter avec des déchets normaux.

N'essayez pas de recharger ce type de pile. Ne court-circuitez pas ou ne forcez pas la décharge de la pile car cela pourrait causer une fuite, une surchauffe ou une explosion.

WARNING

Surfaces chaudes

Faire attention, lors de la manipulation d'un connecteur "N", après l'injection de haute puissance en continu sur l'entrée RF de ce connecteur. Si une puissance supérieure à 50 W est envoyée pendant une longue durée, la température du connecteur peut être très élevée.

WARNING

Module d'affichage à cristaux liquides.

Ne pas démonter le module d'affichage à cristaux liquides.

La matière contenue dans l'afficheur à cristaux liquides utilisé dans cet appareil est une substance toxique. Si l'afficheur est endommagé ou si la matière des cristaux liquides s'écoule, il faut éviter de la mettre en contact avec sa bouche. En cas de contact avec la peau, laver immédiatement la surface touchée avec de l'eau et du savon et s'adresser à un service médical.

L'éclairage de l'afficheur provient d'un tube cathodique fluorescent (CCFT). Celui-ci contient une petite quantité de gaz mercure, qui est une substance toxique.

L'afficheur ainsi que le tube CCFT sont en verre. Il faut donc éviter de leur faire subir des chocs mécaniques pouvant causer des dégâts.

Ne pas se débarrasser de ces modules ni d'aucun de leurs composants dans une poubelle à usage domestique. Utilisez uniquement les containers à déchets appropriés.

WARNING

Position inclinée

Lorsque l'appareil est dans une position inclinée, il est recommandé, pour des raisons de stabilité, de ne pas y empiler d'autres appareils.

Vorsichtsmaßnahmen

WARNING **CAUTION** **Note**

Diese Hinweise haben eine bestimmte Bedeutung in diesem Handbuch:

WARNING dienen zur Vermeidung von Verletzungsrisiken.

CAUTION dienen dem Schutz der Geräte.

Note enthalten wichtige Informationen.

Gefahrensymbole

Die Gefahrensymbole auf den Geräten sind wie folgt:

Symbol	Gefahrenart
	Allgemeine Gefahr
	Gefährliche Spannung
	Warnung vor giftigen Substanzen
	Heiße Oberfläche

Allgemeine Hinweise zur Verwendung

Dieses Produkt wurde entsprechend den Anforderungen von EN61010-1/EC1010-1 "Sicherheitsanforderungen für elektrische Ausrüstung für Meßaufgaben, Steuerung und Laborbedarf", Klasse I transportabel zur Verwendung in einer Grad 2 verunreinigten Umgebung, entwickelt und getestet. Dieses Gerät ist für Netzversorgung Klasse I oder II zugelassen.

Das Gerät sollte vor dem Eindringen von Flüssigkeiten sowie vor Regen, Schnee etc. geschützt werden. Bei Standortänderung von kalter in wärmere Umgebung sollte das Gerät wegen der Kondensation erst nach Anpassung an die wärmere Umgebung mit dem Netz verbunden werden. Das Gerät darf nur in Umgebungsbedingungen wie in Kapitel 1 "Leistungsdaten (Performance data)" der Bedienungsanleitung beschrieben, betrieben werden.

Dieses Produkt ist nicht für den Einsatz in gefährlicher Umgebung (z.B. Ex-Bereich) geprüft. Sollte das Gerät für den Einsatz in einer solchen Umgebung vorgesehen sein, so ist dies von einer für diesen Bereich zuständigen Person zu beurteilen und zu genehmigen.

WARNING

Elektrische Schläge (Wechselspannungsversorgung)

Das Gerät entspricht IEC Sicherheitsklasse 1 mit einem Schutzleiter nach Erde. Das Netzkabel muß stets an eine Steckdose mit Erdkontakt angeschlossen werden.

Filterkondensatoren in der internen Spannungsversorgung können auch nach Unterbrechung der Spannungszuführung noch geladen sein. Obwohl die darin gespeicherte Energie innerhalb der Sicherheitsmargen liegt, kann ein leichter Spannungsschlag bei Berührung kurz nach der Unterbrechung erfolgen.

Sicherungen

Die interne Sicherung in der Spannungszuführung ist in Reihe mit der spannungsführenden Zuleitung geschaltet. Bei Verbindung mit einer zweiadrigen, nicht gepolten Steckdose kann die Sicherung in der Masseleitung liegen, so daß auch bei geschmolzener Sicherung Geräteteile immer noch auf Spannungspotential sind.

Abnahme von Abdeckungen

Die Spannungsversorgung muß vor Abnahme von Gehäuseabdeckungen unterbrochen sein, damit hochspannungsführende Teile gefahrlos zugänglich sind. Falls Abgleiche oder Servicearbeiten unter Spannung notwendig werden, dürfen solche Arbeiten nur von fachkundigem Personal durchgeführt werden, das die Gefahren kennt.

WARNING

Feuergefahr

Es dürfen nur Ersatzsicherungen vom gleichen Typ mit den korrekten Spezifikationen entsprechend der Stromaufnahme des Gerätes verwendet werden. Siehe hierzu die Leistungsdaten (Performance Data) in Kapitel 1.

WARNING

Warnung vor giftigen Substanzen

In einigen Bauelementen dieses Geräts können Epoxyharze oder andere Materialien enthalten sein, die im Brandfall giftige Gase erzeugen. Bei der Entsorgung müssen deshalb entsprechende Vorsichtsmaßnahmen getroffen werden.

WARNING

Lithium

Eine Lithium Batterie oder eine Lithium Batterie innerhalb eines IC wird in den folgenden Bauelementen dieses Geräts verwendet:

IC10	B2	46829/936
IC10	B2/1	46830/110
Siehe unten †	B3/1	46830/181.
IC9	B9	46830/074.

†Wenn auf Grund von Option 2 die Leiterplatte B3/1 eingebaut ist, befindet sich im oberen Bereich des Funkmeßplatzes, gegenüber der Audioprozessor-Leiterplatte B1 eine 3,5 Volt Lithium Thionyl Chlorid Batterie.

Lithiumzellen bergen folgende Gefahren:

Da Lithium giftig ist, darf die Batterie niemals geöffnet, zerstört oder verbrannt und mit normalem Müll entsorgt werden.

Die Batterie darf nicht aufgeladen werden. Kurzschließen der Batterie kann zu Überhitzung, Öffnung der Explosion führen.

WARNING

Heiße Oberfläche

Vorsicht bei Berührung der HF Eingangsbuchse Typ N nach Einspeisen hoher Dauerleistung. Falls über längere Zeit 50 Watt überschritten wird, kann die Temperatur der Buchse über Normal steigen.

WARNING

Das LCD Modul

Die Flüssigkristallsubstanz, die im Displaymodul dieses Gerätes enthalten ist, enthält giftige Substanzen. Falls das Displaymodul beschädigt wird und die darin enthaltene Flüssigkristallsubstanz entweicht, so achten Sie darauf, daß diese Substanz in keinem Fall mit Schleimhäuten in Berührung kommt. Sollte die Substanz mit Ihrer Haut in Berührung kommen, so waschen Sie die betroffenen Hautpartien mit Wasser und Seife ab und geben sich in ärztliche Behandlung.

Die Hintergrundbeleuchtung des Displays besteht aus einer CCFT (Cold Cathode Fluorescent Tube). Dieses enthält kleine Mengen Quecksilbergas. Dieses Gas ist giftig.

Sowohl das Display als auch die Hintergrundbeleuchtung bestehen aus Glas. Mechanische Einwirkungen können diese Gläser zerstören.

Entsorgen Sie diese Module oder Teile davon nicht über den normalen Hausmüll, sondern über eine geeignete Sondermüllverwertung.

WARNING

Schrägstellung

Bei Schrägstellung des Geräts sollten aus Stabilitätsgründen keine anderen Geräte darauf gestellt werden.

Precauzioni

WARNING **CAUTION** **Note**

Questi termini vengono utilizzati in questo manuale con significati specifici:

WARNING riportano informazioni atte ad evitare possibili pericoli alla persona.

CAUTION riportano informazioni per evitare possibili pericoli all'apparecchiatura.

Note riportano importanti informazioni di carattere generale.

Simboli di pericolo

Significato dei simboli di pericolo utilizzati nell'apparato:

Simbolo	Tipo di pericolo
	Pericolo generico
	Tensione pericolosa
	Pericolo sostanze tossiche
	Superfici ad alta temperatura

Condizioni generali d'uso

Questo prodotto è stato progettato e collaudato per rispondere ai requisiti della direttiva EN61010-1/IEC1010-1 'Safety requirements for electrical equipment for measurement, control and laboratory use' per apparati di classe I portatili e per l'uso in un ambiente inquinato di grado 2. L'apparato è stato progettato per essere alimentato da un alimentatore di categoria I o II.

Lo strumento deve essere protetto dal possibile ingresso di liquidi quali, ad es., acqua, pioggia, neve, ecc. Qualora lo strumento venga portato da un ambiente freddo ad uno caldo, è importante lasciare che la temperatura all'interno dello strumento si stabilizzi prima di alimentarlo per evitare formazione di condense. Lo strumento deve essere utilizzato esclusivamente nelle condizioni ambientali descritte nel capitolo 1 'Performance Data' del manuale operativo.

Questo prodotto non è stato approvato per essere usato in ambienti pericolosi. Se lo strumento deve essere usato per applicazioni particolari (collegate alla sicurezza), occorre che una persona o un istituto competente ne certifichi l'uso.

WARNING

⚠ Pericoli da elettricità (alimentazione c.a.)

Quest 'apparato è provvisto del collegamento di protezione di terra e rispetta le norme di sicurezza IEC, classe 1. Per mantenere questa protezione è necessario che il cavo, la spina e la presa d'alimentazione siano tutti provvisti di terra.

Il circuito d'alimentazione contiene dei filtri i cui condensatori possono restare carichi anche dopo aver rimosso l'alimentazione. Sebbene l'energia immagazzinata è entro i limiti di sicurezza, purtuttavia una leggera scossa può essere avvertita toccando i capi della spina subito dopo averla rimossa.

Fusibili

Notare che un fusibile è posto sul filo caldo del cavo di alimentazione. Qualora l'alimentazione avvenga tramite due poli non polarizzati, è possibile che il fusibile vada a protezione del neutro per cui anche in caso di una sua rottura, l'apparato potrebbe restare sotto tensione.

Rimozione dei coperchi

Prima di rimuovere i coperchi occorre scollegare la spina d'alimentazione onde evitare il rischio di esposizione di parti ad alta tensione. Eventuali operazioni di manutenzione che richiedono la presenza dell'alimentazione dovranno essere eseguite solo da parte di personale specializzato ed a conoscenza dei pericoli coinvolti.

WARNING

Pericolo d'incendio

Assicurarsi che, in caso di sostituzione, vengano utilizzati solo fusibili della portata e del tipo prescritti.

Se viene usata una spina con fusibili, assicurarsi che questi siano di portata adeguata ai requisiti di alimentazione richiesti dallo strumento. Tali requisiti sono riportati nel cap. 1 "Performance data".

WARNING

Pericolo sostanze tossiche

Alcuni dei componenti usati in questo strumento possono contenere resine o altri materiali che, se bruciati, possono emettere fumi tossici. Prendere quindi le opportune precauzioni nell'uso di tali parti.

WARNING

Litio

Batteria al litio o integrati contenenti batterie al litio sono usati nei seguenti componenti:

IC10	B2	46829/936
IC10	B2/1	46830/110
Vedi oltre†	B3/1	46830/181.
IC9	B9	46830/074.

† Nel caso in cui è stata inserita la piastra B3/1, per fornire le caratteristiche dell'opzione 2, è da considerare che nella parte alta del cestello del Service Monitor, vicino alla piastra processore audio (audio processor) B1, è stata collocata una batteria al litio clorato di tionile da 3,5V.

Le pile al litio presentano due pericoli:

Poiché il litio è una sostanza tossica, la batteria non deve mai essere rotta, bruciata o gettata tra I rifiuti normali.

Questo tipo di batteria non deve mai essere sottoposta a ricarica né va cortocircuitata o sottoposta a scarica violenta in quanto ciò potrebbe comportare fumi surriscaldamento o esplosione.

WARNING

Superfici ad alta temperatura

Fare attenzione nel toccare il connettore d'ingresso di tipo N dopo aver applicato una potenza elevata e continua. Una potenza superiore a 50 W per tempi prolungati può portare il connettore ad una temperatura molto elevata.

WARNING

Schermo a cristalli liquidi (LCD - Liquid Crystal Display)

Non disassemblare il modulo LCD.

La sostanza contenuta nello schermo LCD è tossica. Se il modulo LCD viene danneggiato e si ha una perdita di liquido, occorre evitarne il contatto con la bocca. In caso di contatto con la pelle, lavare immediatamente le aree interessate con acqua e sapone e contattare un medico.

L'illuminazione dello schermo è prodotta tramite un tubo fluorescente a catodo freddo (CCFT - Cold Cathode Fluorescent Tube) che contiene una piccola quantità di gas mercurio, anch'esso tossico.

Sia lo schermo LCD sia il tubo CCFT sono di vetro, per cui non devono essere sottoposti a shock meccanici che possono causarne la rottura.

Il modulo LCD, il tubo CCFT o i loro residui vanno eliminati come residui speciali secondo la normativa vigente.

WARNING

Posizionamento inclinato

Quando lo strumento è in posizione inclinata è raccomandato, per motivi di stabilità, non sovrapporre altri strumenti.

Precauciones

WARNING **CAUTION** **Note**

Estos términos tienen significados específicos en este manual:

WARNING contienen información referente a prevención de daños personales.

CAUTION contienen información referente a prevención de daños en equipos.

Note contienen información general importante.

Símbolos de peligro

Los significados de los símbolos de peligro que aparecen en los equipos son los siguientes:

Símbolo	Naturaleza del peligro
	Peligro general
	Voltaje peligroso
	Aviso de toxicidad
	Superficies a altas temperaturas

Condiciones generales de uso

Este producto ha sido diseñado y probado para cumplir los requerimientos de la normativa EN61010-1/IEC1010-1 "Requerimientos de la normativa para equipos eléctricos de medida, control y uso en laboratorio", para equipos clase I portátiles y para uso en un ambiente con un grado de contaminación 2. El equipo ha sido diseñado para funcionar sobre una instalación de alimentación de categorías I o II.

Debe protegerse el equipo de la entrada de líquidos y precipitaciones como nieve, lluvia, etc. Cuando se traslada el equipo de entorno frío a un entorno caliente, es importante aguardar la estabilización el equipo para evitar la condensación. Sólo debe utilizarse el aparato en las condiciones ambientales especificadas en el capítulo 1 "Especificaciones" o "Performance Data" del Manual de Instrucciones/Manual de Operación/Funcionamiento.

Este producto no ha sido aprobado para su utilización en entornos peligrosos. Si se va a utilizar el equipo en una aplicación con implicaciones en cuanto a seguridad, es preciso que un experto competente en materia de seguridad apruebe su uso.

WARNING

Nivel peligroso de electricidad (tensión de red)

Este equipo cumple las normas IEC Seguridad Clase 1, lo que significa que va provisto de un cable de protección de masa. Para mantener esta protección, el cable de alimentación de red debe de conectarse siempre a una clavija con terminal de masa.

Tenga en cuenta que el filtro de red contiene condensadores que pueden almacenar carga una vez desconectado el equipo. Aunque la energía almacenada está dentro de los requisitos de

seguridad, pudiera sentirse una ligera descarga al tocar la clavija de alimentación inmediatamente después de su desconexión de red.

Fusibles

Se hace notar que el fusible de alimentación interno está enserie con el activo del cable de alimentación a red. Si la clavija de alimentación de red cuenta con sólo dos terminales sin polaridad, el fusible puede pasar a estar en serie con el neutro, en cuyo caso existen partes del equipo que permanecerían a tensión de red incluso después de que el fusible haya fundido.

Para retirar las tapas

Desconectar de red antes de retirar las tapas para evitar el riesgo que supone tener accesibles aquellas partes del equipo expuestas a alta tensión. Aquellas operaciones que requieran tener alimentación con las tapas abiertas para mantenimiento o ajuste deben de ser realizadas por personal cualificado, que esté al tanto de los riesgos implicados.

WARNING

⚠ Peligro de incendio

Asegúrese de utilizar sólo fusibles del tipo y valores especificados como repuesto.

Si se utiliza una clavija con fusible incorporado, asegúrese de que los valores del fusible corresponden a los requeridos por el equipo. Ver sección de especificaciones del capítulo 1 para comprobar los requisitos de alimentación.

WARNING

Aviso de toxicidad

Alguno de los componentes utilizados en este equipo pudieran incluir resinas u otro tipo de materiales que al arder produjeran sustancias tóxicas, Por tanto, tome las debidas precauciones en la manipulación de esas piezas.

WARNING

Litio

Baterías de Litio o circuitos integrados que contienen baterías de Litio, se utilizan en los siguientes componentes del equipo:

IC10	B2	46829/936
IC10	B2/1	46830/110
Mirar abajo†	B3/1	46830/181.
IC9	B9	46830/074.

† Cuando se instala la placa B3/1 para disponer de la opción 2, se coloca una batería de Cloruro de Tionilo de Litio en la bandeja superior del monitor de comunicaciones junto a la placa del procesador de audio B1.

Las baterías de Litio presentan dos tipos de riesgo para lo que se recomiendan las siguientes precauciones:

Debido a que el \litio es una substancia tóxica, en ninguna circunstancia deberá ser aplastada, incinerada o desechada con basura normal.

No intente recargar este tipo de batería. No cortocircuito o fuerce la descarga ya que esto podría motivar la destrucción, sobrecalentamiento o explosión de la batería.

WARNING

Superficies a altas temperaturas

Tenga cuidado al tocar el conector de entrada RF tipo N tras la aplicación continuada de altos niveles de potencia. La temperatura del conector puede llegar a ser excesiva si se sobrepasan 50 W durante un periodo prolongado de tiempo.

WARNING

Módulo de visualizador de cristal liquido

No desmonte el módulo del Visualizador.

La sustancia que forma el Cristal Liquido del panel de visualización es tóxica. En caso de dañarse el visualizador y salir a exterior dicha sustancia, no permita que la misma entre en contacto con su boca. Si la sustancia se pusiera en contacto con su piel, lave inmediatamente las áreas afectadas con agua y jabón y busque asistencia médica.

La iluminación del visualizador se efectúa mediante un Tubo Fluorescente de Cátodo Frío (CCFT). Este tubo contiene una pequeña cantidad de gas de mercurio que es una sustancia tóxica.

Tanto el visualizador como el tubo fluorescente están hechos de vidrio. Por tanto no les someta a golpes que puedan romperlos.

No tire estos módulos, ni parte de ellos a la basura doméstica. Deshágase de ellos con métodos aprobados para residuos industriales. [IT1]

WARNING

Tener en cuenta con el equipo inclinado

Si utiliza el equipo en posición inclinada, se recomienda, por razones de estabilidad, no apilar otros equipos encima de él.

Chapter 1
TECHNICAL DESCRIPTION

Contents

Background 1-3
Overview of operation 1-3
Detailed technical description 1-4
A0 Overall assembly 1-8
CONTROL AND MMI 1-9
B2/1 Microprocessor board (44830/110) 1-10
Front panel/keyboard (46662/603) 1-30
Display (28624-308) 1-31
Power supply module (44991/179) 1-31
RECEIVER SECTION 1-34
A11/1 Input/output switching and broad band power meter (44830-163) 1-34
A21 2 stage input attenuator (44429/081) 1-38
A2 Input mixer (44829/922) 1-39
A7/1 1st local oscillator control (44830/111) 1-41
A8/1 1st local oscillator (44830/112) 1-44
AA1 Voltage controlled oscillator (41830/160) 1-48
A3 2nd & 3rd mixer (44829/923) 1-49
A10 90 MHz swept local oscillator (44829/930) 1-52
A9/1 2nd & 3rd local oscillator (44830/097) 1-55
A4/1 10.7 MHz IF & log amplifier (44830/103) 1-58
A15 Single sideband demodulator board (optional) (44830/021) 1-62
AUDIO PROCESSING 1-64
B1/2 Audio processor (44830/180) 1-64
B4 600 Ω audio input/output interface (optional) (44829/972) 1-79
B13 CCITT filter (44830/136) 1-81
B13/1 CMESS filter (44830/176) 1-82
SIGNAL GENERATOR 1-83
C1 RF generator control (44830/113) 1-84
C2 RF oscillator (44830/104) 1-85
AF3 Voltage controlled oscillator board (44829/853) 1-85
C3 RF divider (44830/105) 1-91
C4 Bypass board (44830/106) 1-94
C5 BFO board (44830/107) 1-96
C6 RF tray interconnection PCB (44830/108) 1-97
A6/1 RF output amplifier and AM modulator (44829/925) 1-99
A20 3 stage output attenuator (44429/080) 1-102
INTERFACES 1-103
B7 GPIB interface (optional) (44829/991) 1-103
B12 Memory card (optional) (44830/114) 1-105
B10 Parallel interface (optional) (44829/992) 1-108
B11 Light-weight power head interface (optional) (44830/074) 1-112
SYSTEMS 1-115
B3/1 Cellular radio systems board (optional) (44830/181) 1-115

List of tables

Table 1-1 Memory map 1-17
Table 1-2 I/O map 1-18
Table 1-3 Microprocessor interrupt lines 1-19
Table 1-4 Analogue to Digital Converter IC44 inputs 1-23
Table 1-5 LCD display inputs 1-25
Table 1-6 LCD backlight level control 1-28
Table 1-7 Spectrum analyzer video bandwidth filter selection 1-28
Table 1-8 Oscilloscope and spectrum analyzer signal routeing 1-29
Table 1-9 Power requirements from power supply module 1-31
Table 1-10 Voltmeter ranging circuit selection 1-74
Table 1-11 Set deviation ranges for differing signal generator frequencies 1-90
Table 1-12 C2/AF3 Deviation ranges and FM attenuation 1-90
Table 1-13 Software control C2 1-91
Table 1-14 Software control C3 1-93
Table 1-15 Diode switching levels 1-93
Table 1-16 Parallel port connections 1-110
Table 1-17 Accessory port connections 1-111

List of figures

Fig. 1-1 Simplified block diagram. 1-5
Fig. 1-2 Block diagram of control and measurement systems 1-12
Fig. 1-3 Block diagram of master clock. 1-14
Fig. 1-4 Front panel key matrix 1-20
Fig. 1-5 Simplification of keyboard encoding 1-21
Fig. 1-6 Variable control direction determination 1-22
Fig. 1-8 Detailed block diagram of A11/1 Input switch and power meter 1-35
Fig. 1-9 Detailed block diagram of A2 1-40
Fig. 1-10 Detailed block diagram of A7/1 and A8/1, showing the complete control loop. 1-42
Fig. 1-11 Detailed block diagram of A3 1-50
Fig. 1-12 Detailed block diagram of A10 1-53
Fig. 1-13 Detailed block diagram of A9/1 1-56
Fig. 1-14 Detailed block diagram of A4/1. 1-59
Fig. 1-15 Signal routeing for alternative bandwidth filters 1-60
Fig. 1-16 Block diagram of audio generators 1-67
Fig. 1-17 Detailed block diagram of RF oscillator system. 1-83
Fig. 1-18 Detailed block diagram of A6/1 1-100
Fig. 1-19 Data and strobe timing 1-110
Fig. 1-20 A typical I^2C data transfer waveform 1-113

Background

The technical descriptions in this chapter are intended to assist service engineers engaged in the maintenance or repair of the Communications Service Monitor 2948. It is referred to as the *Service Monitor* in the rest of this chapter, unless a fuller description is necessary for clarity.

Overview of operation

As an introduction to these descriptions, a brief insight of the purpose of the Service Monitor and its method of operation is given. For more detailed information consult the operating manual.

The Communications Service Monitor 2948, is an integrated test instrument primarily designed for testing mobile radio communication equipment. It is AC mains or DC powered.

The Service Monitor contains RF and AF signal generator circuits, RF and AF measuring circuits, with a back-lit LCD display for setting up test parameters and presenting test results. Alternative oscilloscope and spectrum analyzer display modes are included.

The SYSTEM test facility, allows radio communication equipment, designed to function on automatic systems, to be tested using optional programs within the Service Monitor.

A microprocessor controls all functions of the instrument.

The Service Monitor can be controlled manually from the front panel, or remotely using RS232 or GPIB interfaces.

Transmitter testing

To test a mobile radio transmitter, the Service Monitor produces an AF signal, which is fed to the AF input of the transmitter.

The RF output from the transmitter is fed to the Service Monitor, usually by direct connection.

Frequency and power measurements are made to the RF signal. Distortion, modulation level, and other measurements are made to the demodulated signal.

The parameters for transmitter testing are set up using the TRANSMITTER TEST screen, accessed by pressing the [Tx TEST] key. The test results are also displayed on this screen.

Receiver testing

To test a mobile radio receiver, the Service Monitor generates an RF test signal, which is fed to the receiver, usually by direct connection. The test signal can be FM or AM modulated.

The demodulated output from the receiver is fed to the AF input of the Service Monitor where the parameters of the signal are measured.

The parameters for receiver testing are set up using the RECEIVER TEST screen, accessed by pressing the [Rx TEST] key. The test results are also displayed on this screen.

Duplex testing

The Service Monitor is a duplex instrument.

When carrying out tests on duplex transceivers, the Service Monitor is able to generate modulated RF signals, while providing an AF signal to modulate the transmitter.

The measuring circuits are able to make all measurements to the frequency offset, incoming RF signal, including the demodulated signal, and to the AF output of the receiver. The frequency offset between the transmit and the receive signals can also be measured.

The RF input and output connectors can be set for any permutation, to suit 'one port' or 'two port' connections.

When switching between the Rx TEST mode, the Tx TEST mode and the Dx TEST mode, no changes take place to the set-up of the Service Monitor or to the state of the output signals and measurement functions.

The DUPLEX screen, accessed by pressing the [Dx TEST] key, allows the results of both receiver and transmitter tests to be seen simultaneously. Primary parameters of receiver testing and transmitter testing can be set from this screen. Transmitter distortion results and oscilloscope displays are not shown on the DUPLEX screen.

Spectrum analyzer mode

The SPECTRUM ANALYZER mode of the Service Monitor is accessed by pressing the [SPEC ANA] key. It configures the internal circuits to provide a display which shows signal strength against frequency. The RF input signal is applied to the Y axis of the display, while the Service Monitor receiver circuits are repeatedly swept over the required frequency range, in step with the X axis of the display.

Tracking generator

With the tracking generator function active, the output of the Service Monitor RF generator is made to sweep in synchronisation with the RF input tuning. This allows the response of filters and other frequency dependent circuits to be measured and viewed. The tracking generator is activated from the SPECTRUM ANALYZER display.

Look and Listen

The Look and Listen mode of the spectrum analyzer, allows the signal tuned to the centre frequency of the display to be demodulated and fed to the internal loudspeaker or to the accessory socket. The Look and Listen mode is activated from the SPECTRUM ANALYZER display.

AF testing

The AF TEST mode allows the AF generators and the AF measuring circuits to be used for active testing of audio circuits.

The parameters for AF testing are set up using the AUDIO TEST screen, accessed by pressing the [AF TEST] key.

Detailed technical description

This technical description of the constituent assemblies of the Service Monitor is sub-divided into the following areas:-

1. Control and MMI
2. Receiver
3. Audio processing
4. Signal generator
5. Interfaces
6. Systems

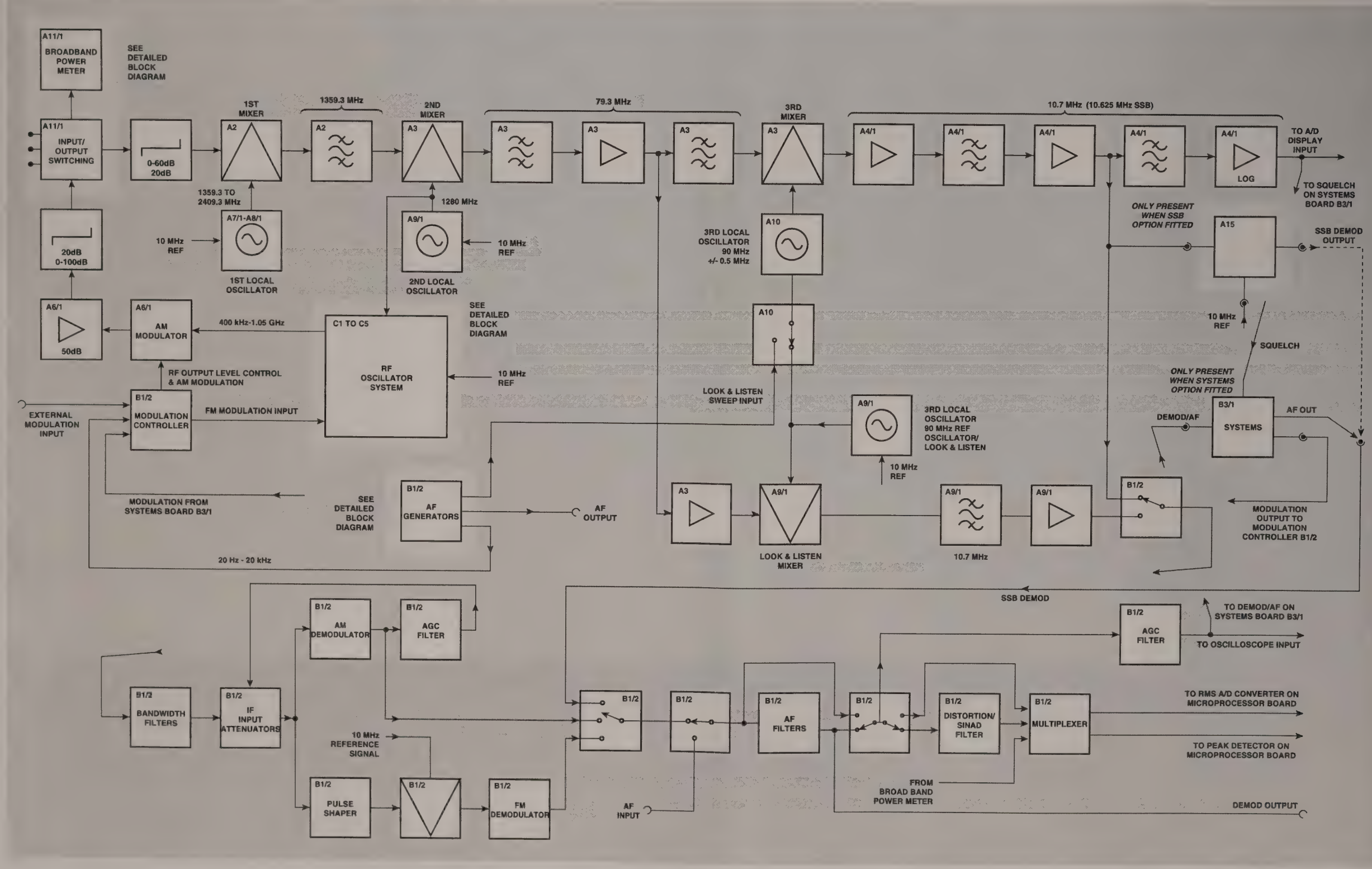

Fig. 1-1 Simplified block diagram

Simplified block diagram

The sequence of descriptions for the circuit sections of each board, follow the flow of the relevant circuit diagram sheets from left to right, starting from sheet one.

A block diagram showing the RF circuits and the audio processing circuits of the Service Monitor is shown in Fig. 1-1 *Simplified block diagram.* Detailed block diagrams are included in the technical descriptions where necessary.

Each board description has a table showing the connections to it, with individual pins listed where this is practical. DC voltages, signal frequencies and levels, and control line labels are shown.

The DC supply voltages to each board are tabulated, with currents shown where this is practical.

A0 Overall assembly

Most of the active circuits of the Service Monitor are contained on multi-layer printed circuit boards, which are fitted to metal trays within the instrument. The trays which contain RF circuits are fitted with metal lids to provide total RF screening. There are also sub-assemblies such as switched attenuators, the power supply module, the display module and the keyboard.

Components such as the mains switch, the ventilation fan, the RF input load, front panel rotary controls etc. are fitted directly to the a main assembly. Refer to the *Overall connection diagram* in chapter 7.

AC and DC supply connections

The AC supply is connected to the rear of the Service Monitor using 3 pin IEC connections. The chassis mounted male connector meets UL and CSA approval. It has integral RF filters for EMC control. A 20 mm cartridge fuse in the live conductor, is also incorporated. This is accessible by pulling out the fuse carrier at the bottom of the connector. A spare fuse can also be stored in the fuse carrier. The live and neutral conductors pass through the ON-OFF switch (See Below) to the power supply module. The earth conductor connects directly to the chassis of the Service Monitor.

The DC supply is connected to the rear of the Service Monitor using a 3 pin XLR type connector. The positive conductor is taken through FS2, housed in a fuse holder on the rear panel, then to the power supply module. The negative conductor is taken to the chassis of the Service Monitor. The negative input for the power supply module is taken from the same chassis connection.

The outer conductor on most coaxial connections on the Service Monitor connects directly to the chassis. Therefore these are at either earth or DC negative potential. Exceptions to this are the AF INPUT connector and the AF GEN OUT connector. These can be isolated from the chassis under some operating conditions.

ON-OFF switch

The power ON/OFF switch for the Service Monitor is a push ON - push OFF device, with a 2 pole single throw section and an isolated 2 pole double throw section. The AC supply from the fused connector to the power supply module is switched by the single throw section. One normally open contact of the double throw section activates the power supply module DC to DC converter. The other contacts of the double throw section are not used.

Ventilation fan

The ventilation fan is fitted to the rear of the Service Monitor. It is powered from a 12 V DC supply provided from CON C on the PSU assembly.

20 dB load attenuator

The N type RF input/output connection is fed through a 20 dB load attenuator. A thermistor with a negative temperature coefficient is fitted in thermal contact to this load, so that rises in its temperature will cause the resistance of the thermistor to drop. A connection to the microprocessor board B2/1 triggers the overload detection circuit at a preset temperature. The action of the detector is described as part of the microprocessor board B2/1.

Rotary controls

The rotary control potentiometers for VOLUME, SQUELCH and oscilloscope trace POSITION, are fitted to the front panel and connected to the audio processor board B1/2. All three potentiometers are connected across the 5 V rail, supplied from B1/2 board. The slider of each potentiometer provides a 0 to +5 V control signal to the appropriate circuit. The volume and oscilloscope position are controlled on B1/2, the squelch control circuit is on B2/1. The connections to the variable controls are made through PLD on B1/2, with the squelch control signal being routed through B1/2 to B2/1.

Continuously variable control

The continuously variable control produces two square wave signals when rotated. The two signals have a 90° phase difference, which is used to detect the direction of rotation, with each pulse stepping the selected parameter up or down in value. The devices within the control are powered by the +5 V rail. Connections are made to B2/1 through PLH on that board.

Loudspeaker

The monitoring loudspeaker is fitted to the right hand side of the overall assembly. This is an 8 Ω, 200 mW unit, fed from PLK on the audio processor board B1/2.

CONTROL AND MMI

B2/1 Microprocessor board (44830/110)

Overview

The microprocessor board is fitted within the underside of the top tray. It contains the 80C188 microprocessor which controls all functions of the Service Monitor, together with the required memory in the form of RAM, NOVRAM, EPROM and EEPROM.

As well as the microprocessor and memory, this board contains the hardware for most of the control and display functions of the Service Monitor. These are:-

- The components which form the master clock, used by the microprocessor and other areas of the Service Monitor.
- I/O address decoding.
- Keyboard decoding and variable control interpretation.
- Serial interface control.
- Interface to the parallel, GPIB and memory card options.
- Analogue measurements, by A to D conversion.
- RF attenuator control drivers.
- RF frequency control.
- Display generation, updating and control; including oscilloscope and spectrum analyzer displays.
- Cellular and other system test option interfacing.

Board replacement

This board holds information unique to the particular instrument, and also the current calibration data. If the board is replaced with a substitute board, recalibration of the whole Service Monitor will be necessary. The unique data can only be replaced at a Marconi Instruments Service Centre. See Chapter 3, Adjustment and Calibration.

Connections

(refer to the relevant circuit diagram for pin connections)

PLA	From the external frequency standard socket on the rear panel.
PLB	Supplies power and frequency correction to the Oven Controlled crystal (Xtal) Oscillator. Returns the 10 MHz, TTL output from the oscillator to the board.
PLC	Supplies 2 individual 10 MHz clock signals to the RF tray. (A8/1 and A9/1). 50 Ω, 0 dBm.
PLD	Single pin connection from temperature sensor on 20 dB 50 Ω load. Voltage below 2.5 V causes the overload warning to trigger.
PLE	Multi-pin connection to Cellular systems and memory card/time stamp options.
PLF	Multi-pin connection to the front panel keyboard.
PLG	Multi-pin connection to GPIB/parallel interface option.
PLH	Voltage supply to, and signalling from, the rotary control.
PLJ	Multi-pin connection to RS232 interface.
PLK	Multi-pin connection to audio processor board B1/2. (Also see PLM).
PLL	Multi-pin connection for control signals to RF attenuators A20 and A21.
PLM	Multi-pin connection to audio processor board B1/2. (Also see PLK).
PLN	Multi-pin connection to RF tray assembly
PLP	Not used in this instrument.
PLR	Supply voltage to LCD back-light inverter.
PLS	Power rail connections from power supply unit. LOW BATT signalling from power supply unit.
PLT	Log amplifier output signal from A4/1
PLU	Supplies 10 MHz clock signal to A15. 50 Ω, 0 dBm
PLW	Carrier detection signal to optional Cellular Systems board, B3/1.
PLX	Sweep mode test point. Goes LOW during analyzer sweep.
PLY	10 MHz clock signal to C6 for RF generator tray.
SKA	Voltage supplies and data to Liquid Crystal Display.

Power rails

Power rail	Entry point	In situ current	'Board only' current
-12 V	PLS pins 3 and 4	400 mA	250 mA
+5 V	PLS pins 5 and 6	620 mA	580 mA
+12 V	PLS pins 7 and 8	580 mA	350 mA
0 V	PLS pins 1 and 2		

A block diagram of the board, showing the main elements of the control and measurement systems, is given in Fig. 1-1.

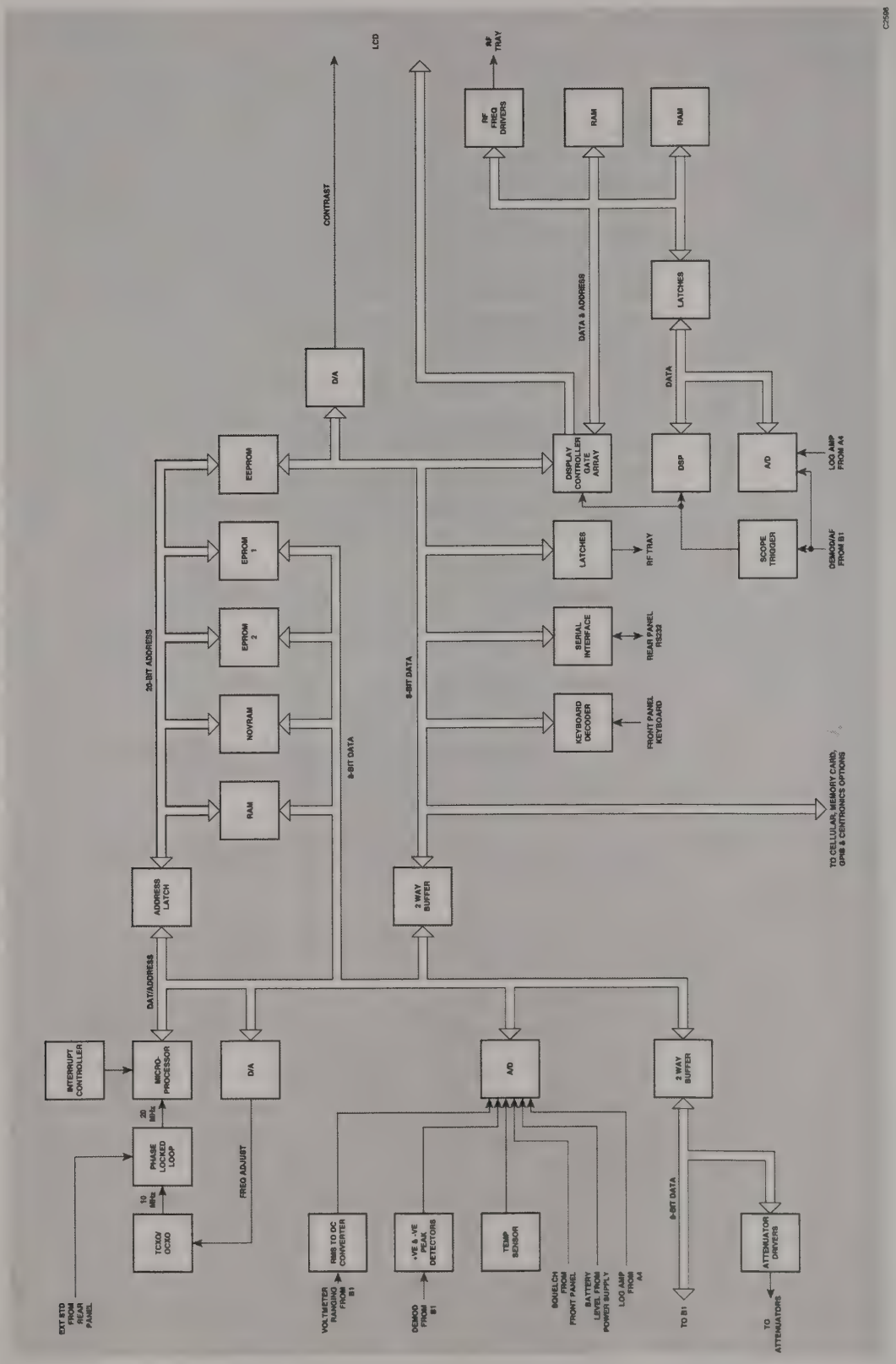

Fig. 1-2 Block diagram of control and measurement systems

Detailed description

Supply Voltages

The +5 V, –12 V and +12 V supplies required for the board are routed from the power supply module through PLS. A branch taken from each supply is given additional filtering to provide a clean supply where required.

Voltage regulator, 5 Volt

Voltage regulator IC80 provides a noise-free 5 V supply from the +12 V supply. This provides the clean supply for the OCXO 10 MHz crystal oscillator.

10 MHz master clock

The 10 MHz internal frequency standard for the Service Monitor is provided by a Oven Controlled Crystal Oscillator (OCXO). This is mounted on the frame of the 'B' tray and connected to the board through PLB.

The clock signals of various frequencies, required for this board and for other areas of the Service Monitor, are all produced by the master clock circuits or derived from it. If an external frequency standard is connected to the instrument, the OCXO is locked to the external standard. See Fig. 1-3, *Block diagram of master clock.*

OCXO

The OCXO requires a 12 V supply, connected through PLB, pin 4. The 5 V supply connected to pin 3 is not used in this instrument. The frequency control voltage is supplied to it through pin 5, and the 10 MHz, TTL output to the board is through pin 1. If no correction is applied, this will have a nominal level of +2-5 V. Increasing the control voltage to +5 V will increase the output frequency by approximately 150 Hz, while reducing it to 0 V will reduce the output frequency by approximately 150 Hz.

Frequency correction

The frequency of the internal frequency standard can be corrected to offset any error in its basic frequency. A frequency offset is applied from the frequency standard adjustment screen, accessed by using the [HELP/SETUP], *[Calibrate]*, *[Freq Stnd]*, key sequence. A security code restricts the use of the *[Calibrate]*, key. Details of the use of all the calibration facilities will be found in Chapter 3, Adjustments and Calibration.

Correction to the clock frequency is achieved by applying a correction voltage to the oscillator. Correction data entered from the instrument calibration screen is processed and sent over the data bus to a digital to analogue converter IC51. Course and fine control voltages are produced from the outputs of this IC, which are buffered by IC75a and IC75b. The buffered outputs are fed to the summing circuit built around IC75c.

The correction voltage will be applied to the internal oscillator whenever the Service Monitor is operating.

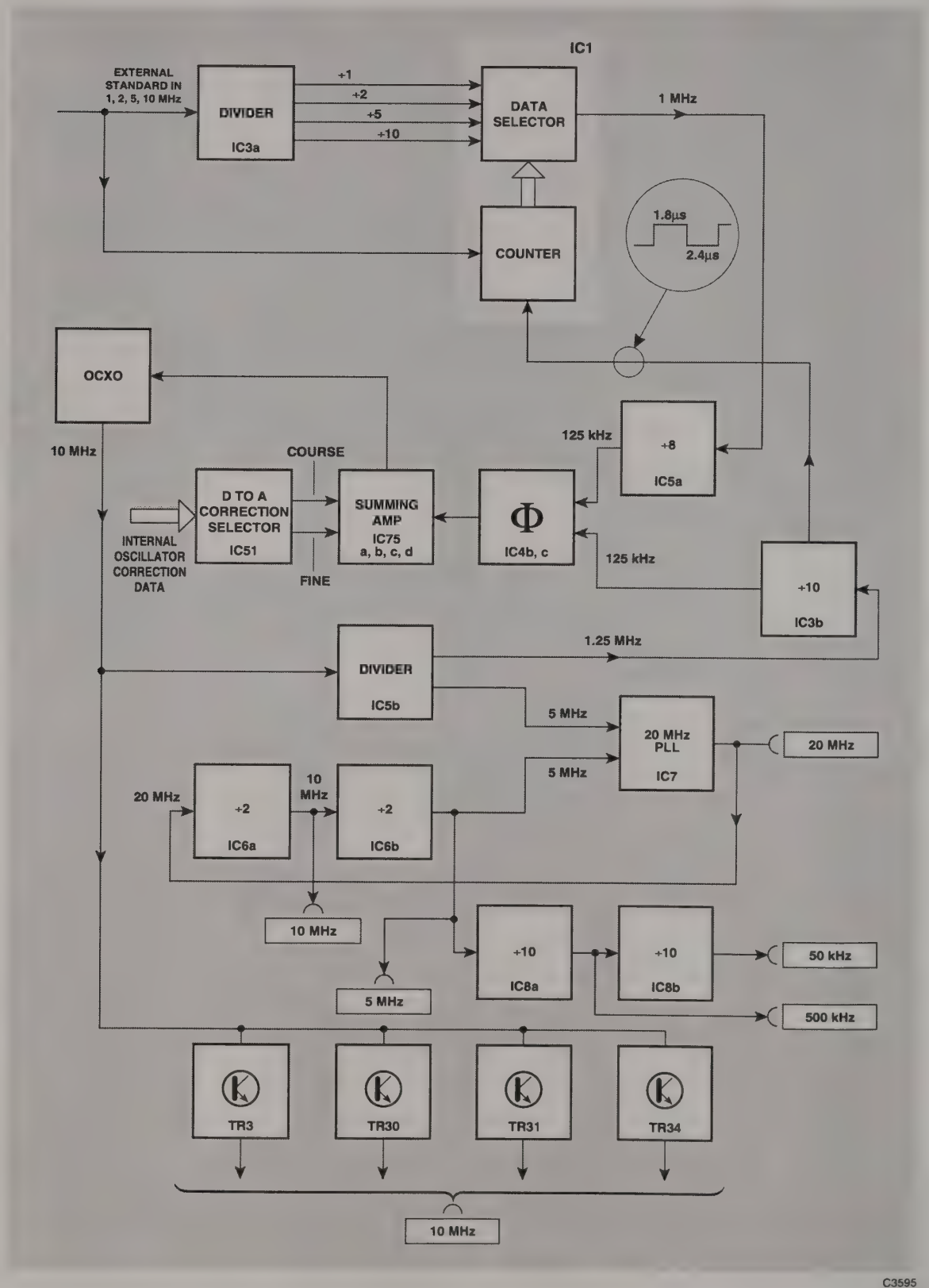

Fig. 1-3 Block diagram of master clock.

External standard frequency sensing and dividing

The external standard does not drive the clock system directly, but is compared with the frequency of the internal oscillator and a difference signal generated to correct the internal oscillator. The external frequency standard signal enters the board at PLA, pin 2, then fed to buffer amplifier TR2. It can be locked to an external frequency standard of 1, 2, 5 or 10 MHz.

The output from the collector of TR2 is passed through an inverter and level corrector, IC82e, then to the clock input of PAL IC1, pin 1 and also to the 'Divide by 1' input.

The buffered external reference signal is also fed to the 'A' input of frequency divider IC3a, which provides outputs ÷2 on pin 3, ÷5 on pin 5 and ÷10 on pin 6. These outputs are fed to the 'Divide by 2', 'Divide by 5' and the 'Divide by 10' inputs of PAL IC1.

A periodic reference signal, derived from the internal 10 MHz clock, is produced by IC3b and fed to the REF input, pin 2, of IC1. This reference signal has a high period of 1.8 µS and a low period of 2.4 µS. The logic programmed into IC1 counts the number of pulses on its clock input, pin 1, during the low period of the reference signal, and from the result, selects one of the 'Divide by' inputs to route to the output on pin 13. The selected signal will always be 1 MHz.

The 1 MHz signal is fed to the 'A' input of IC5a which is configured to ÷8, thereby producing an output of 125 kHz, derived from the external frequency standard, on pin 5.

IC5b is configured to ÷8, and a signal from the internal 10 MHz clock is fed to the 'A' input, pin 13. The 1.25 MHz obtained is passed from the QC output on pin 9, to the 'B' input of IC3b. This is configured to ÷10, thereby producing a 125 kHz signal, derived from the internal frequency standard, on pin 13.

The output from IC5a is fed to one input of XOR gate IC4b, and that from IC3b, to the other input. An output from IC4b will only result from any phase difference between the two signals. This is fed through XOR gate IC4c and then to integration network R8, R9, R10, C5 and C6. The voltage developed across C6 is fed through R11, to be summed with the frequency control voltage from IC75c through R13, at the input to IC75d.

The phase difference between the output of IC5a and the output of IC3b under locked conditions is approximately 90°. Therefore the voltage across C6 will rise or fall with any phase change between the two signals, producing an increase or decrease in the control voltage to the internal frequency standard, thereby locking it to the external standard.

20 MHz phase locked loop

Although the 80C188 microprocessor IC13, runs at 10 MHz, it requires a 20 MHz clock input, which it divides by 2 so as to produce a 10 MHz clock with an accurate 50/50 mark/space ratio. This is fed into the microprocessor X1 input, pin 59. Test point TP5 is a monitor point for this.

The 20 MHz clock is produced by the phase locked loop oscillator, IC7.

The frequency setting capacitors C13 and C14, cause the oscillator on the IC to run at approximately 20 MHz.

The phase comparison inputs of the oscillator are configured to operate at 5 MHz, with 50/50 mark/space ratio signals. The input signal fed into pin 6 is obtained from the QA output of IC5b, which is a ÷2 output obtained from the 10 MHz clock.

The 5 MHz signal for the 'Phase' input, pin 3, is obtained from the oscillator output 'OUT 1' and fed through two ÷2 flip-flops IC6a and IC6b. Any phase difference between the two inputs is used within IC7 to correct the output frequency.

Master clock outputs

The master clock provides emitter follower outputs from TR3, TR30, TR31 and TR34. Each of these is configured to give 50 Ω, 0 dBm outputs.

The output from TR3 leaves the board on PLC pin 1 for use on the 1st local oscillator board, A8/1.

TR30 provides the clock signal for the 2nd and 3rd local oscillator board A9/1, routed through PLC pin 4.

The output from TR31 is routed through PLC, pin 6 and PLY, pin 2. These are not used on this instrument.

TR34 provides the clock signal for the optional SSB demodulator board through PLU.

A 10 MHz signal from pin 6 of IC6a is routed to the AF processor board B1/2, through PLK, pin 3.

Other frequency outputs

The master clock circuit also produces frequency-stable clock signals for use on the microprocessor board:-

A 5 MHz signal from pin 8 of IC6b, is fed to PLG, pin 5, for use by the optional GPIB/parallel interface.

A 500 kHz signal derived from the 5 MHz signal on IC6b, pin 8, is produced at the ÷10 output of IC8a, and used as the clock for 8 channel A to D converter IC44.

A 50 kHz signal is produced by dividing by 10, the signal from IC8a, using IC8b. This is used within the microprocessor, IC13, as a timing standard for 'Tones' generation, being fed to the 'TMRIN0' input on pin 20 and can be monitored at TP6.

This 50 kHz signal is also used to switch the diode pump circuit, TR21 and TR22, which produces -18 V for the LCD backlight.

Reset circuit

A reset circuit functions whenever the Service Monitor is powered up. This resets the microprocessor, which initiates an instrument reset.

The reset line for the microprocessor is provided by IC81 and can be monitored at TP16. This monitors the +5 V power rail and produces a 300 ms low pulse from the RES connection, pin 5, after the power rail has risen above 4.5 V. The reset line is directly connected to the RES (low) connection, pin 24, of the microprocessor. When this pin is held low the microprocessor resets internally and sends the RESET connection, pin 57, high. RESET stays high until RES (low) is returned to the normal (high) state. RESET is fed to the following circuits:-

IC19 address decoder PAL

The serial interface.

The GPIB/parallel interface connection.

The systems board option (if fitted).

A reset can be initiated by shorting test point TP4, to test point TP30, using a shorting connector. The microprocessor will remain in the reset state, with RES (low) held low until the link is removed.

Microprocessor

The 80C188 processor has a 16-bit internal data bus, with an 8-bit external data bus and a 20-bit external address bus.

The lower 8 bits of address (A0-A7), are time-multiplexed with the data lines (D0-D7), on AD0, pin 17, to AD7, pin 2.

The address/data lines AD0-AD7 and the address lines A8-A19 contain a valid address during the first period of an address/data operation. Each of these lines is coupled to one input of latches IC14, IC15 or IC16.

During this time ALE, pin 61, is high, which enables the latches, thereby allowing the address bits to enter.

At the end of the address period, ALE goes low, the latches are disabled, and the address bits retained within the latches are readable from the Q connections.

Data transfer can then take place.

Addressing

The 20-bit address bus accesses 1 M byte of memory, which is divided up as shown in the following table :-

Table 1-1 Memory map

Address	Description	IC number
00000H to 1FFFFH	RAM	IC9
20000H to 21FFFH	NOVRAM	IC10
22000H to FFFFFH	EPROM main software	IC11 and IC12

Address decoding for the RAM, IC9, is generated by the 80C188 on the LCS(low), pin 33. This pin goes low when a RAM address is referenced, thereby taking CE1 low on the RAM, pin 22.

Address decoding for the NOVRAM, IC10, is also generated by the 80C188, but on MCS0, pin 38, which enables the NOVRAM by taking its CE1 low, pin 22.

Address decoding for the EPROMs is generated by PAL IC18. I/O7, pin 18, being taken low will enable IC11, and I/O5, pin 16 enables IC12.

The design of this board allows either 256 kbyte or 512 kbyte EPROMs to be used, depending on the software requirements. The size of each EPROM is setup in software, by writing to latch IC40, immediately after power-up. ROM 1 SIZE, from IC40, pin 19, to IC18 IN1, pin 2, selects the size of IC11. A low selects a 256 kbyte 27C020 and a high selects a 512 kbyte 27C040.

Similarly, ROM 2 SIZE, from IC40, pin 16, to IC18 IN2, pin 3, selects the size of IC12.

IC11 being a 27C020 and IC12 being a 27C040 is not a valid selection.

As well as providing 1 Mbyte of memory space, the 80C188 provides 64 kbytes of I/O space. This is selected when S2, pin 54, on the microprocessor is low.

All peripherals except the RAM, NOVRAM and EPROM are accessed through I/O.

I/O address decoding

I/O address decoding is performed by five devices as shown in the following table. A decode of the address by the device results in the specified pin going low.

Wait states

Because the different peripherals on the I/O require different bus speeds, wait states are inserted into the read/write cycles for certain I/O locations. The control of these wait states is one of the functions performed by PAL, IC19. The number of wait states inserted for each perennial location is shown in the decode table.

The wait state PAL latches in A13, A14, A15 and S2 on ALE, and controls the ARDY line, pin 55, on the microprocessor. This holds the microprocessor until the peripheral is ready.

Table 1-2 I/O map

Address	Description	Pin number	Wait states
PAL IC18			
0000H to 3FFFH	8-channel ADC	13	2
3 to 8 line decoder, IC24			
4000H to 47FFH	Memory card option	15	1
4800H to 4FFFH	Memory card page	14	1
5000H to 57FFH	DSP interrupt	13	1
5800H to 5FFFH	Options fitted buffer	12	1
6000H to 67FFH	Interrupt buffer	11	0
6800H to 6FFFH	RF1 latch	10	0
7000H to 77FFH	RF2 latch	9	0
7800H to 7FFFH	Spare latch	7	0
3 to 8 line decoder, IC25			
8000H to 87FFH	Attenuator latch	15	0
8800H to 8FFFH	Clock adjust DAC	14	0
9000H to 97FFH	Not used	13	0
9800H to 9FFFH	Not used	12	0
A000H to A7FFH	B1/2 board address latch	11	3
A800H to AFFFH	B1/2 board data latch	10	3
B000H to B7FFH	LCD contrast / log amp shifting DAC	9	3
B800H to BFFFH	LCD backlight/input select	7	3
PAL IC19			
C000H to DFFFH	EEPROM	15	0
Microprocessor, IC13			
E000H to E07FH	Serial (RS232)	25	1
E080H to E0FFH	GPIB option	27	2
E100H to E17FH	Cellular option	28	0
E180H to E1FFH	Keyboard	29	0
E200H to E27FH	Front panel variable	30	0
E280H to E2FFH	LCD driver gate array	31	0
E300H to E37FH	Not used	32	0

Other functions of PAL IC19

IC19 performs two other functions.

These are the EEPROM, IC32, chip select on pin 15, and the generation of a 3.077 MHz clock signal.

The 3.077 MHz clock is required by the serial interface controller, IC41, pin 20.

The baud rate signal for the serial interface controller is generated by the microprocessor. The 3.077 MHz clock signal is passed through ÷2 flip-flop IC77a, to produce a 1.5385 MHz signal which is fed to TMR IN 1 of the microprocessor, pin 21. The baud rate signal is produced on TMR OUT 1, pin 23, when required, and fed to the serial interface controller, IC41, pin 25.

Buffered and quiet data busses

The I/O peripherals are connected onto the data bus through one of two bi-directional buffers, IC21 and IC22. The exception to this is the 8-channel analogue to digital converter, IC44, which has direct connections onto the address/data bus AD0 to AD7.

IC21 provides the 'Buffered' data bus, BD0 to BD7, which is active for addresses 4000H to 7FFFH and C000H to FFFFH.

IC22 provides the 'Quiet' data bus, QD0 to QD7, which is only active for addresses 8000H to BFFFH. This provides a bus with less noise, for use by the audio processor board B1/2.

Interrupts

The 80C188 microprocessor provides 4 external interrupt lines, tabulated below:-

Table 1-3 Microprocessor interrupt lines

Interrupt	Description	Multiplexed from:-
IN0	DCS interrupt from Audio processor board, B1/2	
IN1	RxRDY receive interrupt from serial interface, IC41.	
IN2	GPIB interrupt	
IN3	Multiplexed interrupt	Cellular Sweep/DSP * Front panel variable Keyboard * 8 - channel ADC TxRDY from serial controller Tx from audio processor board, B1/2. *

The multiplexed interrupt to IN3 is formed by NANDing the interrupts together using NAND gate IC26. When an interrupt is received on IN3, the microprocessor must determine which of the multiplexed interrupts is active. This is done by reading the output of tristate buffer IC27, the inputs of which are each connected to one interrupt line.

The three interrupts marked * in the above table are passed through XOR gates so that the polarity of the interrupt can be changed. By doing this when the interrupt has been acted upon, a second interrupt is created when the action causing the original interrupt is terminated. Using the keyboard interrupt as an example, pressing a key will cause a keyboard interrupt to be placed on IC29b, pin 4. The state of IC29b output will change, putting an interrupt signal on the appropriate input of NAND gate IC26 and buffer IC27. When the microprocessor has identified the interrupt and acted upon it, the state of pin 5 of IC29b is changed through latch IC28. This changes the state of IC29b output thus removing the interrupt from INT3. When the key is released, the state of IC29b, pin 4, will change, putting a new interrupt on INT3.

IC30, controlled by IC28, is used to select between the sweep and DSP interrupt. The state of input A of IC30, pin 14, controls the selection. When input A is high, sweep interrupt is selected, as 2C1, pin 11 the active input. When input is low, DSP interrupt is selected, as 2C0 is active.

Keyboard decoding

The keys on the front panel of the Service Monitor are connected as an 8 × 8 matrix, with the rows and columns arranged as shown in Fig. 1-4 *Front panel key matrix* below.

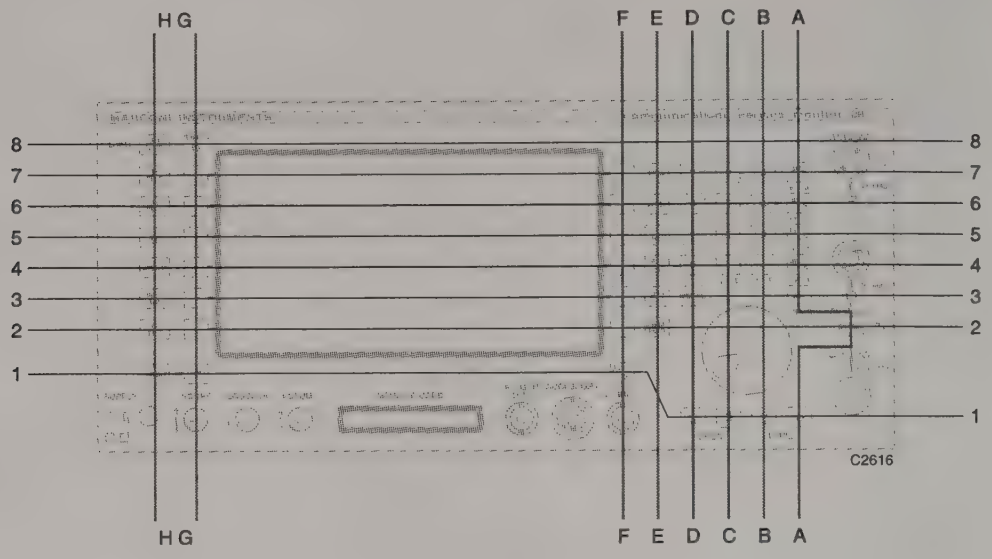

Fig. 1-4 Front panel key matrix

The front panel keys are connected to board B2/1 through PLF. When a key is pressed the connections to the relevant row and column are shorted. The identity of the key is passed to the microprocessor, using priority encoders IC38, IC39 and buffer IC35. The action of this is described below, and a simplified diagram is given in Fig. 1-5 *Simplification of keyboard encoding* below.

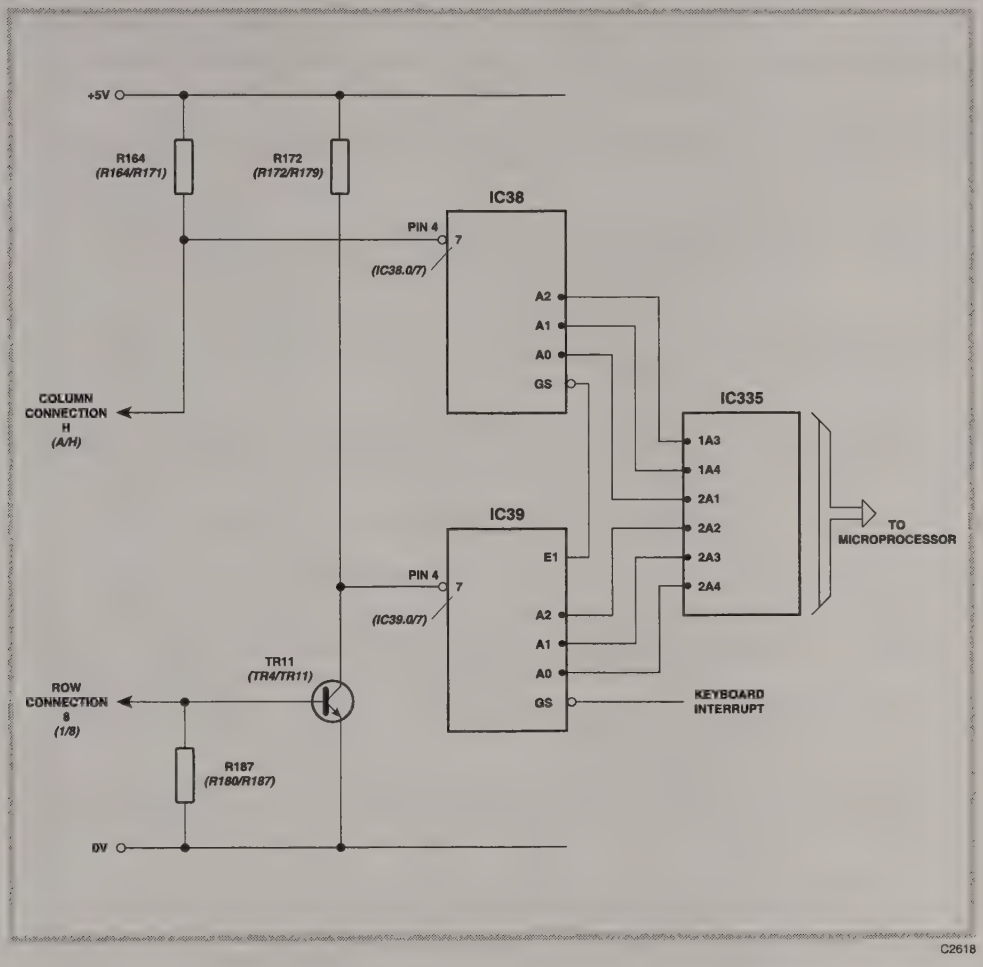

Fig. 1-5 Simplification of keyboard encoding

When a key is pressed, for example the [HELP/SETUP] key, the matrix row line 8 will be connected to matrix column line H. IC38-7, pin 4, will be pulled down to 0.7V as it turns on TR11. IC39-7, pin 4, will also be pulled down as TR11 turns on.

The LOW on priority encoder IC38-7 will be encoded onto its outputs A0 to A2. The LOW on IC39-7 will similarly be encoded. The value of the three bit codes on each of the encoders is read through IC35.

The link from IC38 GS to IC39 E1 connect these encoders in cascade therefore when a key is pressed the GS output from IC39 goes low. This is de-bounced by IC17b and IC17c to generate the keyboard interrupt, which can be monitored at test point TP10.

Front panel LEDs

The LEDs on the front panel are connected onto board B2/1 through PLF pins 5 to 9. They are driven by IC34, a low output turning on the LED. The circuits to pins 3 and 4 are not used.

Front panel variable control

The front panel variable control is connected through PLH. Pins 1 and 3 are the +5V and 0V supply to the active components within the control. When the control is rotated a square wave signal is produced on pin 5 and pin 6. There is a 90° phase difference between these signals, which allows the direction of rotation to be determined by 'D' type flip-flop, IC37b. The value of

PLH/5 is latched into IC37/b by the positive going edge of the signal on PLH/6. The output from IC37b will be low for clockwise rotation and high for anti-clockwise rotation.

See Fig. 1-6 *Variable control direction determination* below.

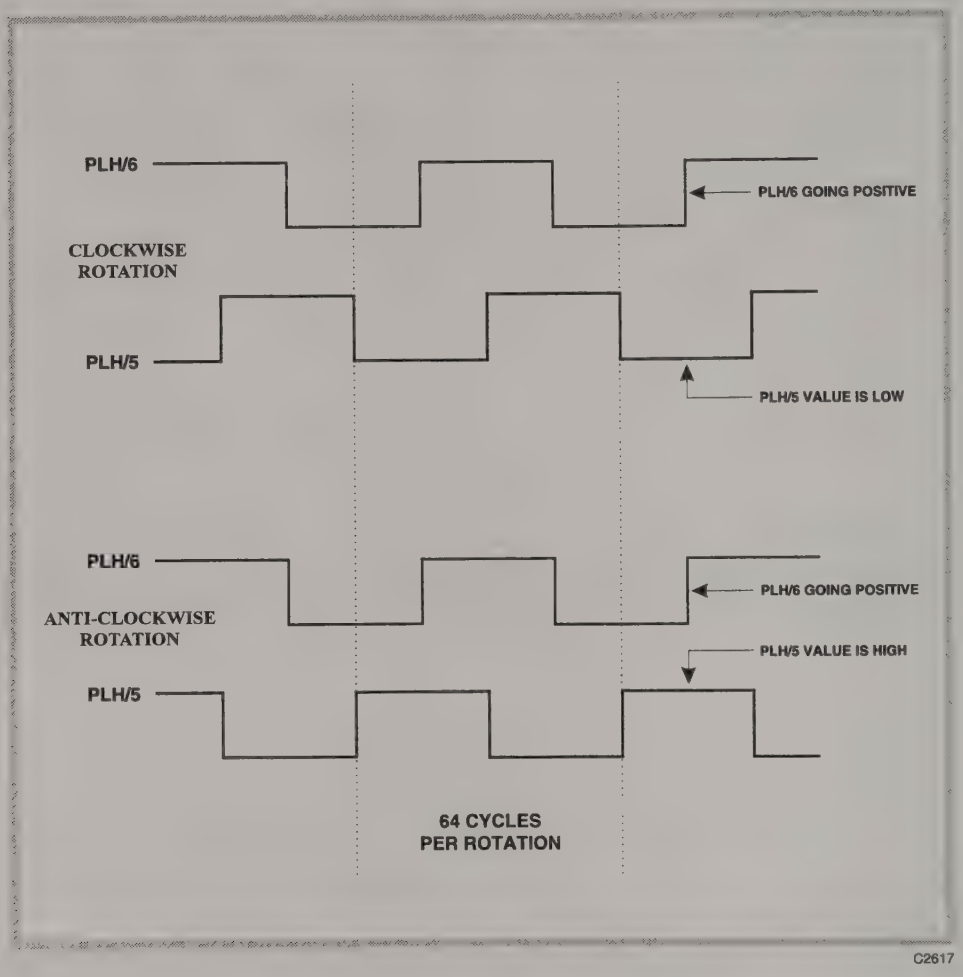

Fig. 1-6 Variable control direction determination

The signal on PLH/6 is also fed to the clock input of IC37a, which generates the 'Variable' interrupt. Each 'Variable' interrupt causes the microprocessor to read the direction of rotation signal and increment the value of the setting currently given to the variable control operation. Each 360° rotation produces 64 cycles of output signal.

Options fitted, identification

The microprocessor has to have an indication of any options that are present in the Service Monitor. This is done using buffers IC33 and IC84. The resistors to each of the inputs of the buffers pulls the inputs high when there is no other connection to the inputs. When an option is fitted, the appropriate input is pulled to 0V on the option board, thereby indicating its presence.

Calibration data storage

The calibration data for the Service Monitor is held in EEPROM IC32. This also holds data relating to fitted options.

Serial interface

The serial interface consists of a UART (universal asynchronous receive transmit) device, IC41; an output driver, IC42; and an input buffer, IC43.

The output data, TxDATA, from the UART, together with the output control signals RTS and DTR, are fed to the output driver IC42. The output from the driver is routed through PLJ to the serial connector on the rear panel.

Input data and the control signals from the rear panel connector are routed through PLJ to the input buffer IC43. The output from this buffer is connected to the UART RxDATA input, and the control inputs CTS and DSR.

The RXRDY interrupt is generated by the UART, and provides a direct input to the microprocessor, whereas the TXRDY interrupt, also generated by the UART, is multiplexed by IC26.

The baud rate clock, produced by the microprocessor, is provided to the Rx CLK input, pin 25, and to the TxCLK input, pin 9, of the UART. The provided signal is 16 times that of the baud rate.

A 3.077 MHz signal, from the master clock circuits, is fed to the UART CLK input, pin 20.

8 channel Analogue to digital converter

The measurements made on the various parameters of the equipment under test must be converted to digital values before being processed by the Service Monitor software. This is carried out by 8 bit, 8 channel, analogue to digital converter, IC44.

The input to be converted is selected by the address on the three address lines ADDA, ADDB and ADDC.

The conversion function is started by a pulse on the START and the ALE inputs of the ADC. The pulse comes from IC45a, as a result of signals from address decoder IC18 and from the microprocessor.

When the ADC has completed the conversion, it generates an interrupt on EOC. The microprocessor then reads the digital value over the address/data lines AD0 to AD7.

Table 1-4 Analogue to Digital Converter IC44 inputs, lists the eight inputs to the ADC, the address which enables each selection and details of the measurement origin.

Table 1-4 Analogue to Digital Converter IC44 inputs

Address	Input selected		Description	From:-
0000H	IN0	(Pin 26)	DC to RMS converter (TP13)	AF volts Wide band power Distortion demod level SINAD reading S/N reading
0001H	IN1	(Pin 27)	Positive peak detector (TP14)	Positive demodulation level
0002H	IN2	(Pin 28)	Negative peak detector (TP15)	Negative demodulation level
0003H	IN3	(Pin 1)	Temperature	Service Monitor internal temperature
0004H	IN4	(Pin 2)	Squelch	Position of front panel control
0005H	IN5	(Pin 3)	Log amplifier	Narrow band power reading
0006H	IN6	(Pin 4)	Low DC supply indicator	External DC supply
0007H	IN7	(Pin 5)	Not used	

The ADC 5 V Reference voltage to pin 12, is supplied from the +12 V rail, through voltage stabiliser IC78. This can be monitored on TP12.

A 500 kHz clock signal from the master clock circuits is supplied to pin 10.

RF attenuator drivers.

The 2-stage RF input attenuator A21 and the 3-stage output RF attenuator A20, are controlled from board B2/1.

Each stage of the attenuator has two activating solenoids, one which inserts the attenuator in circuit, the other to remove it. Two control lines are therefore needed for each stage.

There is no requirement for the input and output attenuators to be switched simultaneously, therefore selection is carried out using common circuitry, with an input or output selector determining which is switched.

Transistors TR12 to TR17 provide a return path for the selected control line while TR18 and TR19 provide a 5 V supply to the selected attenuator assembly. The active transistors are turned on by the appropriate outputs from latch IC47 being made high.

Diode pairs D13 to D15 provide protection against reverse voltage produced by switching the operating solenoids. Diode pairs D16, D17, D18 and D31 prevent current flowing into solenoids that are not selected.

To set up the attenuators, the microprocessor writes to IC47, and the values are latched into it. The clocking signal to IC47 also triggers monostable flip-flop IC46a, which produces a 45 ms pulse to IC47 OE, pin 1. This can be monitored on TP17. The latch is opened for the duration of the pulse, thereby activating the selected attenuator control lines for sufficient time to take up the required states.

Oscilloscope trigger

The oscilloscope trigger signal is produced by the circuit around opamps IC50a, IC50b, IC50c and inverter IC82d.

The signal from audio processor board B1/2, to the oscilloscope input, is tapped by C40 to provide an input to the trigger generator. It is clipped by D19 and D20 before being amplified by IC50a. Further pulse shaping produce a square wave at the output of inverter IC82d. This can be monitored at test point TP18. As well as providing the oscilloscope trigger, this signal drives the AF counter.

RF overload

The Service Monitor gives an audible and visual warning of RF input overload. The trigger signal for this is produced by the RF overload detector circuit.

The inputs to the overload detectors are obtained from two different sources. Peak detectors on the input switching board A11/1 provide negative and positive peak level signals at PLN33 and 34 respectively. An overheat signal, from a thermistor sensor on the RF input load, enters the board on PLD, pin 1.

The peak detector signals are applied to the inputs of opamp IC48d, through the potential dividers formed by R101, R103, and R102, R104. If either of the peak detector signals exceed the design level, the output of IC48d goes to +12 V, producing a +5 V input to OR gate IC36d.

The RF input load overheat signal is fed to the inverting input, pin 9, of IC48c, while the non-inverting input, pin 10, is supplied with 2.5 V from the potential divider R97 and R 98. Under normal conditions, the voltage on pin 9 is greater than 2.5 V, but under overload conditions, the resistance of the thermistor sensor will reduce, pulling the voltage on pin 9 below 2.5 V. This will result in the output of IC48c, pin 8, rising to +12 V, producing a +5 V input to OR gate IC36d.

The output from IC36d feeds into one input of NOR gate IC45c, which ultimately controls the RF input switching. The logic configuration ensures that when the overload detector circuit is triggered, the input switch selects the N type input.

The output of IC36d is also directly coupled to the 2A4 input, pin 17, of buffer IC33. This buffer is read by the microprocessor at frequent intervals, therefore an RF overload will be detected and the audible and visual warning triggered.

RF latches

The RF tray control is performed through latches IC52 and IC53. The control signals are routed to the RF tray through PLN.

TR20 provides the gain control signals for the Input Mixer board A2, which requires -12 V for setting 20 dB gain and +12 V to set 0 dB gain. When IC53 Q6 output is low, the base of TR20 will be at -12 V due to R108, R107 and D1. Therefore the collector of TR20 will be high

When IC53 Q6 output is high, it will be approximately 17 volts above the -12 V line, therefore D1 will conduct. This will take the base of TR20 high, causing TR20 to conduct, taking its collector low.

Latch IC54 is not used in this instrument.

Display controller gate array

Gate array IC55 is programmed with the display controller logic. It contains eight internal registers. These provide the processor interface to:-

The screen RAMs IC63 and IC64

The graphics controller DSP, IC56

The time base generator, (built into the gate array).

Other functions, (screen clearing)

The gate array interfaces directly to the display through SKA, with no additional logic.

The signals on SKA are shown in table 1-5 below:-

Table 1-5 LCD display inputs

SKA	Symbol	Description	
1	Vdd	+5 V	
2	Vss	0 V	
3	Vee	Contrast	(-4 V to -17 V)
4	LP	Latch pulse	One positive pulse every 90 µs
5	FR	Frame pulse	55.6 Hz square wave
6	N/C		
7	N/C		
8	DIN/YD	Start scan pulse	One positive pulse every 9 ms
9	XSCL	Data shift clock	Alternate 200 ns and 300 ns positive pulses, with 200 ns intervals
10	N/C		
11	XD0	Display data	
12	XD1	Display data	
13	XD2	Display data	
14	XD3	Display data	

Screen data consisting of characters and lines is stored in RAM IC63, while RAM IC64 stores moving graphics (oscilloscope traces etc.).

RAM IC64 is also used as a link between the microprocessor and DSP IC56. DSP executable programs are downloaded into IC64 from the microprocessor through the gate array, from where they are subsequently uploaded into the DSP and ran.

Information is also exchanged between the microprocessor and the DSP using IC64. The interface between the DSP and RAM IC64 using a PAL IC57 for address decoding, and five latches IC58 to IC62.

Data transfer from the RAM to the DSP is through IC58, and that from the DSP to the RAM is through IC62.

IC59, IC60 and IC61 are used for address latching.

The DSP IC56 is used for the following functions:-

- Scope trace
- Barcharts
- Spectrum analyzer trace, Including RF sweeping
- Transient analysis trace
- Audio counter
- Sequential and DTMF tones decoding
- DCS tones decoding
- POCSAG decoding
- Circle and line drawing in VOR screen

DSP control lines

The RESET(low) line to the DSP, pin 20, is driven from microprocessor through the gate array IC55, pin 58. It is used to initialise the DSP and cause it to upload a new executable program from RAM IC64. The action of this line can be seen by monitoring test point TP26, while causing a new program to be loaded into IC56 by, for example, pressing the [SPEC ANA] key when in Rx TEST mode.

The FI line to the DSP pin 55, is an output from the gate array that indicates that the previous byte written to RAM IC64 through IC59, IC60 and IC61, has been stored and a new byte can be written. Monitoring this line at test point TP29 will show random negative pulses when in oscilloscope or spectrum analyzer mode. When in sequential tones decode mode the line will be permanently high, except during the reception of tones.

The FO line to the gate array pin 63, is an output from the DSP which instructs the gate array to start the time base generator. The action of this line is best seen when in oscilloscope mode with the Service Monitor time base set 50 µs/division.

Oscilloscope/analyzer ADC

The oscilloscope and spectrum analyzer traces are produced as graphics from DSP IC56. The amplitude level of the analogue signal to be displayed is converted to data using the fast analogue to digital converter IC66.

The analogue signal can be the AF input signal, the Tx TEST mode demodulated signal, or the output from the spectrum analyzer log amplifier. The routeing switches controlling the signal selection are described later under 'AF/log amplifier selection'. The selected signal is fed to the ADC through R113, to VIN, pin 1.

The sampling rate is derived from the time-base generator in the gate array IC55, which is controlled by the microprocessor. The sampling signal is provided on the ADC_WR(low) line from pin 47 of IC55.

This is fed to WR(low) on the ADC, IC66, pin 6, and to the clock input of latch IC65, pin 11. It is also fed through inverter IC17e to provide an interrupt for the DSP on IRQ0, pin 54. This can be monitored on TP27. The digital values of the samples are held in the latch before being read by the DSP.

Fractional-N driver

The frequencies of the Fractional N 1st local oscillator and of the RF generator Fractional N oscillator are set by data from the microprocessor and fed to the RF tray from buffer IC67.

When in Tx TEST, Rx TEST or Dx TEST mode, the frequency of each of these oscillators is determined by the frequencies set for the transmitter and receiver under test. The control data is produced by the microprocessor, and routed through the gate array IC55, to the buffer, then through PLN to the RF tray, and to the control data register of each oscillator.

When in spectrum analyzer mode the RF sweep is produced by a progressive change to the frequency of the 1st local oscillator, while the tracking generator sweep is produced by a progressive change to the RF generator oscillator.

Data relating to the start and stop frequencies of the sweeps is supplied by the microprocessor to DSP IC56, which then produces spot frequency data for each step of the sweep. The data from the DSP is fed through latch IC62, to the buffer IC67.

PAL IC68 decodes address information to route the data to the appropriate Fractional N register. The address of the register is written first. This is written on the rising edge of SIMAL(low)/DUPAL(low). Then the data is written on the rising edge of SIMWR(low)/DUPWR(low).

LCD contrast

The viewing contrast of the liquid crystal display is dependant on the voltage at the VLCO connection with respect to the VSS connection. Minimum contrast is obtained with –19.258 V on VLCO and maximum contrast at –4.208 V. To obtain this voltage range, a 20 V negative supply is produced by the diode pump formed around IC73a, TR21, TR22 and the associated components. This runs at 50 kHz, and the –20 V output can be monitored at test point TP24.

The contrast is adjusted from the HELP/SETUP screen, and the data produced as a result of this is sent to dual digital to analogue converter IC69. The contrast data is used to produce a voltage on IC72a pin 1, which will have a possible range of 0 V to –5 V. This can be monitored on TP22.

Op-amp IC74 is configured to convert this voltage swing to the greater range required by the LCD. It is powered from the +5 V rail and from the –20 V supply from the diode pump circuit.

The equation met by the converter is:-

$$\text{Contrast voltage} = -19.258 - 3.01 \times (\text{voltage at TP22})$$

LCD backlight

The illumination of the LCD is provided by a cold cathode tube and the brightness of the tube is dependant on the supply voltage to it. .The supply is provided from a converter which requires a 24 V input for full output, generated using the +12 V and –12 V supplies

The LCD backlight brightness control circuit provides four different output voltages at PLR1 and PLR2, to feed the converter, thereby giving four different levels of illumination. An OFF state is also provided.

Data relating to the required illumination state is latched into the D4, D5 and D6 of IC70. The outputs from Q4, Q5 and Q6 of this latch control the state of transistors TR23, TR24 and TR25 through op-comparators IC73b, IC73c and IC73d. Resistors R126, R127 and R128 are switched in series with the –12 V supply in various combinations, to provide different levels of illumination as shown in Table 1-6.

Table 1-6 LCD backlight level control

Output from IC70	TR23 state	TR24 state	TR25 state	Brightness level
x000xxxx	OFF	OFF	OFF	OFF
x001xxxx	OFF	OFF	ON	1 (Dim)
x010xxxx	OFF	ON	OFF	2 (Low medium)
x011xxxx	OFF	ON	ON	3 (High medium)
x100xxxx	ON	OFF	OFF	4 (Full)

Video bandwidth filters

There are four video bandwidth filters provided for the spectrum analyzer trace. These are RC filters provided by R234 with C122, C123, C124 or C125. The appropriate capacitor is switched into circuit by the transistor associated with it. Transistors TR26, TR27, TR28 or TR29 are turned on when Q3, Q2, Q1 or Q0 of IC40 are high, because of data latched into it from the microprocessor through data buffer IC21. The user can choose to have the optimum filter to match the current settings of the spectrum analyzer set automatically, or select no video filtering.

Table 1-7 below shows the filters selected by the outputs from IC40, and the components active for each.

Table 1-7 Spectrum analyzer video bandwidth filter selection

Output from IC40	Transistor in ON state	Capacitor selected	Filter cut-off frequency	Filter resolution bandwidth
xxxx0000	None	None	-	-
xxxx0001	TR29	C125	96 Hz	300 HZ
xxxx0010	TR28	C124	650 Hz	3 kHz
xxxx0100	TR27	C123	3 kHz	30 kHz
xxxx1000	TR26	C122	19.8 kHz	300 kHz

Spectrum analyzer shifting circuit

The spectrum analyzer display has two vertical scales, 10 dB/division and 2 dB/division.

The 80 dB range displayed on the 10 dB/division scale, matches the dynamic range of the log amplifier. The log amp input at PLT passes through the filters and the op-amp IC72c to give an overall gain of 1. When 10 dB/division scale is selected switch IC71b is open. This provides a gain of 1 through IC72d. The 80 dB range represents a voltage range of 0 to 5 V at PLT and on the output of IC72d.

When the 2 dB/division scale is selected, switch IC71b is closed, thereby shorting R134, and causing the gain of IC72d to increase to 3.33. A scaling factor of 1.5 is also introduced within the DSP, giving an overall display gain of 5.

Diodes D32, D33 and D34 provide over-voltage protection to keep the output of IC72d within the 0 to 5 V range.

The reference level of the spectrum analyzer display is changed by adding a DC offset to the signal before applying it to the analogue to digital converter. The offset voltage is produced from the 'B' output of digital to analog converter IC69 and op-amp IC72b. It has a range of 0 V to –5 V. It can be monitored at test point TP23. The offset is fed into the inverting input of IC72c, which adds it to the output from the log amplifier. The scale adjustments are produced by the software to coincide with the applied offset.

Carrier detector
(for Cellular Systems option)

The Cellular Systems option has to be able to detect the presence of an RF carrier into the Service Monitor at the tuned frequency. The output from the log amplifier is routed to the Cellular Systems board, when fitted, through PLW. The Cellular Systems board will detect a signal as present when the log amp signal rises through 3.5 V, and as lost when it falls through approximately 2.8 V.

Digital signal processor signal input selection

The graphic traces for the spectrum analyzer and oscilloscope displays are produced by digital signal processor IC56. The digital input signal to the DSP is obtained from the oscilloscope/ analyzer ADC IC66 as described earlier.

Selection between the output from the log amplifier for the spectrum analyzer or the AF/demodulation signal for the oscilloscope, is made using two analogue switches, IC71a and IC71d. The selected signal can be monitored on test point TP21. IC71c switches the oscilloscope input coupling from AC to DC.

The four sections of analogue switch IC71 are controlled by data latched into IC70-Q0, Q1, Q2 and Q3.

Table 1-8 below shows the valid settings of IC71, and the selections which are produced from them.

Table 1-8 Oscilloscope and spectrum analyzer signal routeing

Output from IC70	State of IC71a	State of IC71b	State of IC71c	State of IC71d	Selection
xxxx1111	Open	Open	Open	Open	Nothing selected
xxxx1110	Closed	Open	Open	Open	Spectrum analyzer (×1)
xxxx1100	Closed	Closed	Open	Open	Spectrum analyzer (×5)
xxxx0011	Open	Open	Closed	Closed	Oscilloscope (DC coupled †)
xxxx0111	Open	Open	Open	Closed	Oscilloscope (AC coupled †)

† The oscilloscope coupling capacitor C49, provides AC or DC coupling into the display ADC. AC coupling is required when DTMF and DCS tones decoding is being carried out the by the DSP.

Front panel/keyboard (46662/603)

Overview

This assembly incorporates the front panel of the Service Monitor. It includes the complete key and contact assemblies for each button, as well as the indicating LEDs. There are no user-replaceable parts on this assembly. A new assembly should be fitted in the event of failure.

The Liquid Crystal Display (LCD) is a separate unit, fitted to the rear of this assembly.

The following technical description is provided to assist in localising faults to the keyboard assembly. The functioning of the keyboard in relation to the associated decoding circuits is given within the description of the microprocessor board B2/1.

Assembly replacement

Calibration is not affected by replacement of this assembly.

Connections

The connections to the board are all made through the multi-pin connector PLA, from PLF on microprocessor board B2/1.

PLA	Pins 1 and 2	Connections to LED D1.
	Pins 3 to 9	Switched connections to indicating LEDs D2 to D6
	Pin 10	Common +5 V supply to indicating LEDs D2 to D6
	Pins 11 to 18	Column connections to keyboard switch matrix. Columns H to A respectively.
	Pins 19 to 26	Row connections to keyboard switch matrix. Rows 1 to 8 respectively.

Power rails

The power rails onto this board are:-

Power rail	Entry point	Nominal current
+5 V	PLA pin 10	Varies with L.E.D. illumination

A +5 V supply is obtained from the +5 V rail on B2/1.

Detailed description

The keys are connected in a matrix configuration of eight columns and eight rows. Pressing a key makes a connection between the appropriate column and row rails, which is decoded on the microprocessor board B2/1.

The indicating LEDs D2 to D6 are powered from the microprocessor board B2/1, with a common +5 V anode supply and the cathodes taken to 0 V when required to be illuminated.

The Front panel/keyboard drawing in chapter 7 of this manual shows the circuit diagram and component layout.

Display (28624-308)

Note

Read the warning regarding the Liquid Crystal Display in the precautions section at the front of this manual before removing or servicing it.

Overview

The Liquid Crystal Display used on the Service Monitor is located on the rear of the front panel assembly, with its screen visible through the transparent area of the front panel. It is a sealed unit with no user replaceable parts. The supply inverter PCB for the back-light is permanently attached to the display module by its flexible cable. This is also mounted on the rear of the front panel assembly and is protected by a metal cover.

A new module should be fitted in the event of failure. To assist in localising faults, details of the voltages or data which will be found on each of the connections when functioning correctly, is given in the technical description of the microprocessor board B2/1, (table 1-5 LCD display inputs).

Module replacement

Calibration is not affected by replacement of the display module.

Connections

The data and voltage supply connections to the display are made through the ribbon cable and multi-pin connector attached to it, which connects directly to the microprocessor board B2/1.

The supply to the back-light inverter is from PLA of the microprocessor board B2/1.

Power rails

The display module uses only the +5 V supply taken from pin 1 of SKA of the microprocessor board B2/1. The 0 V connection is made through pin 2.

Power supply module (44991/179)

Overview

The power supply module is not user-repairable. In the event of failure, a replacement module should be fitted, and the faulty module returned to a Marconi Instruments Service Centre.

The following information relating to the power supply module is provided to aid fault location.

The power supply module is a switched mode design, which operates from both an AC supply of 94 to 264 V, 45 to 440 Hz; or a DC supply of 11 to 32 V.

The circuits of the Service Monitor collectively produce a requirement for the DC supplies tabulated below:-

Table 1-9 Power requirements from power supply module

Voltage and polarity	Maximum current
+5 V	3.0 A
+12 V	2.5 A
-12 V	1.2 A
+36 V	100 mA

An additional requirement is for a charging facility to provide a trickle charge to the DC supply when the instrument is working from the AC supply, and a recharge facility when the instrument is not operating.

Module replacement

Fitting a new power supply module does not affect the calibration of the Service Monitor.

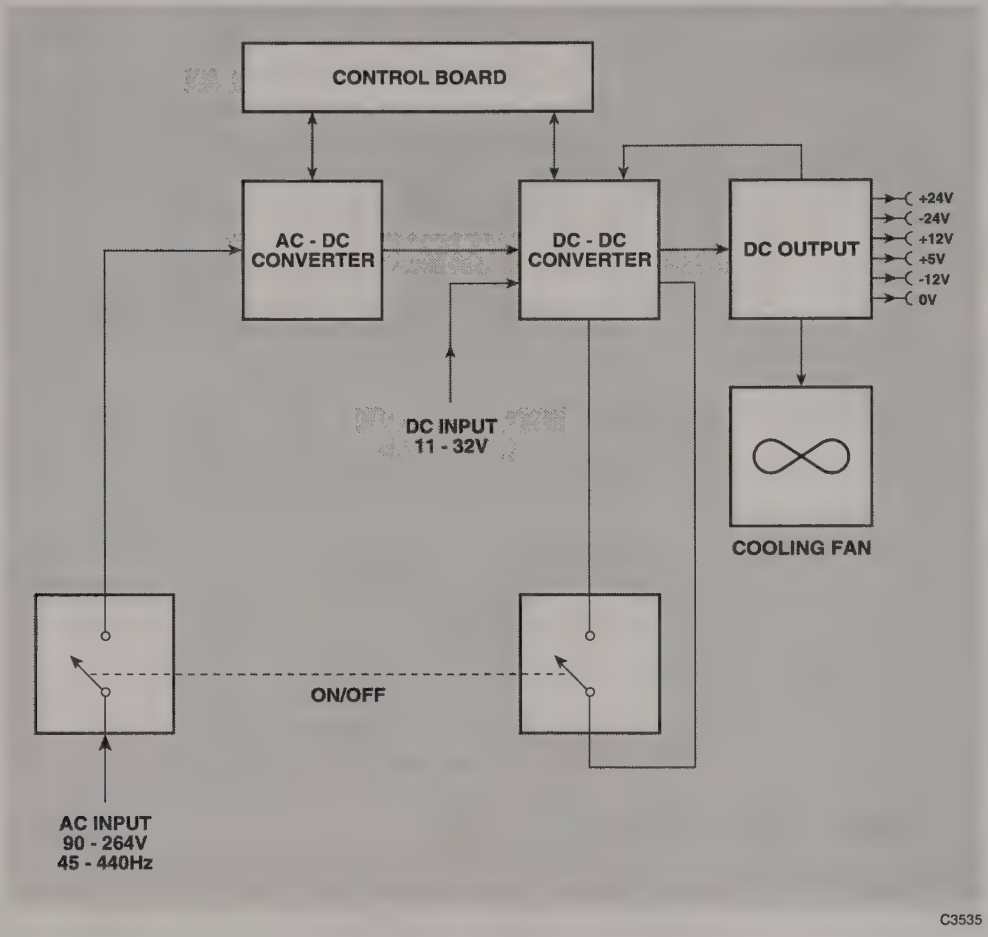

Fig. 1-7 Block diagram of power supply module.

Detailed description

The AC supply enters the instrument through a connector on the rear panel and passes through a fuse and two poles of a triple pole, single throw switch. This switch selects the operate condition or off. The supply then enters the power supply module where it is fed to a bridge rectifier in the AC-DC converter to produce an unregulated DC supply. The voltage of this will depend on the supply voltage as the full range of AC input voltage is covered without range switching.

The second stage of the AC-DC converter produces semi-regulated DC supplies of 12 V or 24 V using a 60 kHz switched mode oscillator and transformer coupling. This transformer also provides the safety isolation barrier.

The external DC or the DC supply from the AC-DC converter is used to drive the DC-DC converter.

The DC output circuits producing the four output supplies are each fed from an individual winding on the DC-DC converter output transformer.

Regulation is applied to the DC-DC converter from the output current and voltage sensing circuits.

Current monitoring to provide regulation is obtained from the three common-return supplies and voltage monitoring from the +5 V supply.

The 36 V is generated by adding a 24 V floating supply onto the +12 V supply rail.

The floating 24 V supply has a voltage regulator configured within it.

A control circuit PCB contains the components for frequency control and regulation of both converters.

The third pole of the power on-off switch is connected to the DC-DC converter circuits through plug and sockets.

RECEIVER SECTION

A11/1 Input/output switching and broad band power meter (44830-163)

Overview

This board contains the switching circuits which route signals to and from the RF connectors on the Service Monitor. These are the RF generator output signals and the RF signals from the mobile under test. It also contains the input overload detection circuits and the broad band power meter circuit.

Board replacement

If this board is replaced with a substitute board, or repairs carried out to it, recalibration of the whole Service Monitor will be necessary.

Connections

The connections to this board are:-

PLA	Pin 1	Board ground.
	Pin 3	-12 V rail.
	Pin 4	+5 V rail.
	Pin 5	25 kHz, 1 V rms signal from B2/1, for the AGC amplifier.
	Pins 6 and 7	RF input overload signals to microprocessor board B2/1.
	Pins 8 to 11	Relay control signals from microprocessor board B2/1.
PLC		25 kHz, RF level out signal, to audio processor board B1/2.
		Solder connection to SMA bulkhead mounted connector. Carries input signal from the ANTENNA input socket on the front panel.
		Solder connection to SMA bulkhead mounted connector. Carries the input signals from, and the output signals to, the N type input socket on the front panel, via the 20 dB RF power attenuator.
		Solder connection to SMA bulkhead mounted connector. Carries the output signal to the BNC output socket on the front panel.
		Solder connection to SMA bulkhead mounted connector. Carries the output signal to the receiver attenuator A21.

Power rails

The power rails onto this board are:-

Power rail	Entry point	Nominal current	Remarks
-12 V	PLA pin 3	5 mA	
+5 V	PLA pin 4	5 mA with relays de-energised	325 mA with all relays energised

A -5 V supply is produced on the board from the -12 V rail, by voltage regulator IC6.

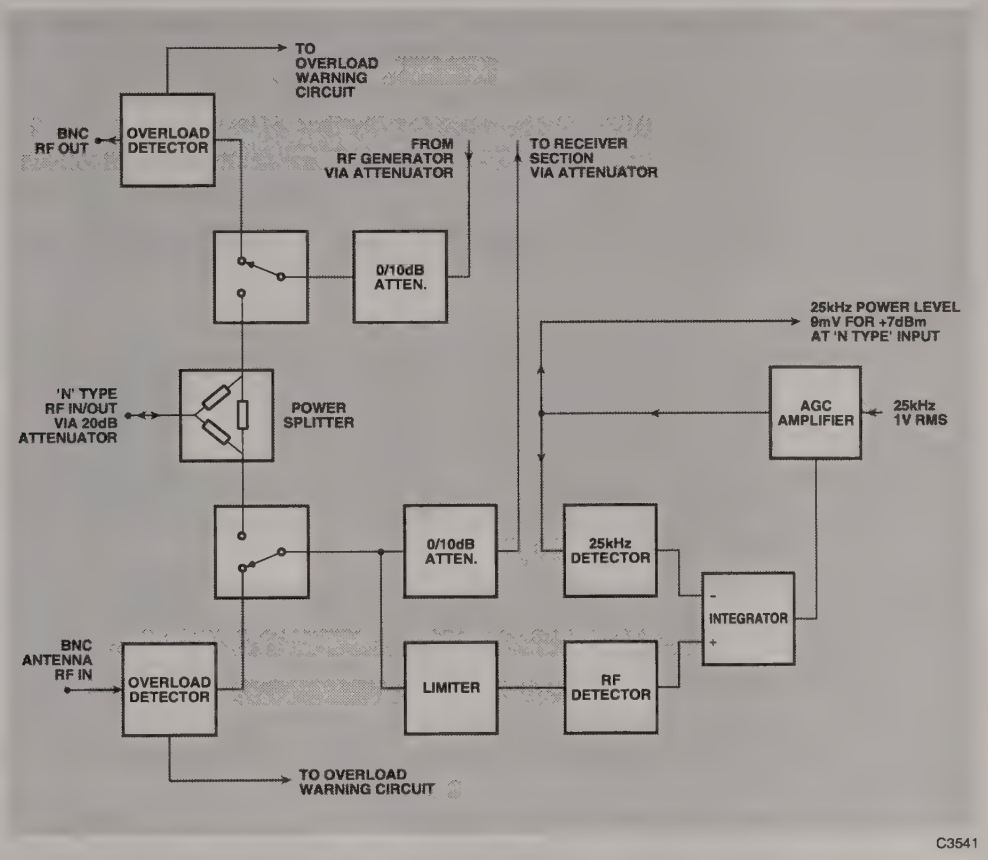

Fig. 1-8 Detailed block diagram of A11/1 Input switch and power meter

Detailed description

RF routeing

The RF connectors on the front of the Service Monitor can be can be configured to the following combinations by repeated presses of the [SELECT] key:-

Antenna in	-	BNC out
Antenna in	-	N type out
N type in	-	N type out
N type in	-	BNC out

When the N type connector is selected for single port duplex operation, a signal path exists from the RF generator switched attenuator A20, through switched attenuator RLE/RLF to the power splitter, then through switched attenuator RLG/RLH to the Service Monitor receiver switched attenuator, A21. This path is used for the Service Monitor self-tests, and can also be used for functional checks to the instrument by setting the RF generator output and the RF input (Tx FREQ) to the same frequency.

Antenna input

When the antenna socket is selected, signals from the transmitter under test are routed to the wide band power meter contained on this board and to the Service Monitor receiver circuits. Relay

RLD is energised by the N/ANT(L) line from the microprocessor board B2/1, through PLA, pin 10 being made low.

The signal for the wide-band power meter, which is described later, is obtained from the potential divider R68, R69.

The signal to the receiver circuits is routed though the 0/10 dB switched attenuator RLG/RLH, to the 2 stage Switched Attenuator A21, then to the Input Amplifier and 1st Mixer board, A2.

The 50 Ω termination consisting of R78 and R79 is switched into circuit by RLC, to load the R110, R112 junction of the power splitter.

N type input

The N type connector can be selected as the input port, output port, or for duplex input/output working. A 20 dB power load, with a power handling capacity of up to 150 W, is permanently connected between this connector and the input to A11/1. A 6 dB power splitter, R110, R111 and R112, takes the input signal to the receiver circuits.

When the N type connector is used as the input to the Service Monitor, relays RLC and RLD are de-energised by the N/ANT(L) line from the microprocessor board B2/1, through PLA, pin 10 being made high.

The signal is routed from the power splitter, through RLC, contacts 11 and 14, and RLD contacts 11 and 14, to the wide band power meter and Service Monitor receiver circuits.

N type output

When the N type connector is used as the output for the signal generator, relays RLA and RLB are de-energised by the N/BNC(L) line from the microprocessor board B2/1, through PLA, pin 11 being made high.

The signal is routed from the 3 stage Switched Attenuator A20 to this board, then through 0/10 dB switched attenuator RLE/RLF. From RLE the signal passes through RLA, contacts 11 and 14, then RLB contacts 11 and 14, to the power splitter. The generator signal is then routed through the power splitter to the N type connector via the 20 dB power load.

BNC output

When the BNC connector is selected as the output for the signal generator, relays RLA and RLB are energised by the N/BNC(L) line from the microprocessor board B2/1, through PLA, pin 11 being made low.

The signal is routed as above (N type output), to contact 11 of RLA, then to contact 8 and off the board to the BNC connector.

The 50 Ω termination consisting of R75 and R76 is switched into circuit by RLB, to load the R110, R111 junction of the power splitter.

Power meter

The signal for the power meter, obtained from the potential divider R88, R89, is fed through isolating capacitor C1 to the overload protection circuit built around D7. Signals in excess of ±5 V are clipped.

The wide band power measurement is not made directly on the input signal, but on a 25 kHz signal generated within the power meter, which is level controlled to match the incoming RF signal.

Detectors and integrator

The signal from the limiter circuit is fed to RF detector diode D10b, which with the associated components C7, C9 and R25, form a negative peak detector circuit. This produces a DC voltage, proportional to the RF signal level.

An identical detector is built around D10a. This produces a DC voltage from the 25 kHz reference signal. D10a and b are in a single package.

The voltages from the two detectors are compared in the integrator circuit built around IC1. This IC is a chopper-stabilised op-amp with extremely low input offset. The control voltage produced by IC1 is direct-coupled to IC2 which provides a level off-set, so that the control voltage at TP2 is within the range –11.9 to –10.8 V.

This voltage controls the gain of the AGC amplifier in a feedback loop, which keeps the 25 kHz signal level at the LF detector input equal to the RF level.

AGC amplifier

The AGC amplifier consists of two cascaded longtail pairs IC3 and IC4, powered from the +5 V and –12 V supplies. The gain of each IC is controlled by the voltage on pin 6, which is the AGC control voltage.

The input to the AGC amplifier is a 25 kHz, signal obtained from reference signal dividers on the audio processor board, B1/2. This is routed through the microprocessor board B2/1, and has a level of 1 V RMS. This signal is attenuated to 2 mV RMS by R40 and R41, then applied to the input of IC3.

When the AGC control voltage at TP2 is –11.9 V, the current through both IC3 and IC4 is zero, the amplifier gain is at a minimum and the input to the AGC LF detector is zero.

When the AGC control voltage at TP2 is –10.8 V, the current through both IC3 and IC4 is 0.6 mA, the amplifier gain is at maximum and the input to the AGC LF detector exceeds 1 V RMS.

Zener D9 limits amplifier current and prevents saturation of IC3 and IC4.

25 kHz processing

The anti-phase outputs from IC4 are combined in IC2d to give a single ended output.

This is applied to attenuator R60 and R61, which precede the 25 kHz band pass filter IC2b. The overall gain is unity at 25 kHz, from IC2d output to IC2b output. The action of the AGC circuit results in a 25 kHz signal being produced at the output of IC2b output, which is directly proportional to the RF input signal level. The 25 kHz signal is amplified in IC2a which has a gain of ×3. The output is routed to the audio processor board B1/2 where it is measured as the RF input level. The level of the 25 kHz signal is from 9 mV to 3 V RMS for normal RF input levels.

Overload detector

The RF generator output BNC socket and the ANTENNA BNC socket are both connected to overload detectors. The signal level at each socket is sampled by a resistor divider, R73 and R74 for the generator output; R80 and R81 for the ANTENNA input.

The sample signal is passed through full wave rectifier diodes D12, D13 or D16, D18. The output from both groups of diodes is connected in parallel across R82 and C44 to develop a DC voltage, with D20 as a protection device.

This voltage is routed to the microprocessor board B2/1, on lines OVERLOAD +VE through PLA7, and OVERLOAD –VE through PLA6. Under normal operation, biasing on B2/1 holds OVERLOAD +VE at a voltage below OVERLOAD –VE. In an overload condition, the rectified output from the sampling circuits forces OVERLOAD +VE to be greater than OVERLOAD –VE. This triggers a threshold detector on B2/1 causing an overload warning to be displayed. The overload threshold at the front panel sockets is typically +30 dBm.

A21 2 stage input attenuator (44429/081)

Overview

Repair, adjustment or dismantling of this unit is not recommended, complete unit replacement being the advised repair procedure.

The description which follows is included to aid fault identification.

This assembly incorporates printed circuit board assembly 44829/892.

Unit replacement.

If this unit is removed from the Service Monitor, the procedure given in Chapter 2, *Access and layout* **MUST** be followed. Similarly the re-fitting procedure **MUST** be followed when fitting a unit.

If this unit is replaced by a substitute unit recalibration should not be required.

Connections

The connections to this board are:-

PLA	Pins 1, 3, 8 and 10.	Attenuator switching signals from B2/1. For duration of the switching pulse, +5 V is switched to the common line, pin 2, and the appropriate switching lines taken to 0 V.
	Pin 2	Common connection for latching relay operating coils.
		SMA connector for RF input from the input/output switching board A11/1.
		SMA connector for RF output to the first mixer board, A2.

Power rails

No power rails are required by this unit.

Detailed description

The 2 stage switched attenuator provides stepped level control to the input of the receiver circuits of the Service Monitor.

It has an attenuation range of 0 dB to 60 dB in 20 dB steps, with one stage of 20 dB and one stage of 40 dB.

The RF signal from the input/output switching board A11/1 is fed to the SMA RF input connector, to pin 11 of RLA. After passing through the selected attenuator stages, it is routed from pin 11 of RLD to the SMA RF output connection, to the .First Mixer board A2.

Each stage consists of a twin π network which can be included in the signal path or bypassed, according to the required value of attenuation.

The selected stages are switched in or out of circuit by latching relays, RLA to RLD, activated by a pulse of approximately 45 ms, routed from the microprocessor board B2/1. The common return for the relay coils is through L1 and PLA pin 4, to the supply produced on microprocessor board B2/1.

A2 Input mixer (44829/922)

Overview

This board has two primary functions. These are a 0/20 dB switched gain amplifier and the first frequency changing mixer.

The switched gain amplifier section contains a low pass input filter with input overload protection, a switchable 0 or 20 dB preamplifier and its associated gain switching circuit.

The frequency changing mixer comprises of a 1100 MHz low pass input filter, the 1st mixer, which translates the input signal frequency range (0 to 1050 MHz) to the 1st IF frequency of 1359.3 MHz, and a 2 GHz lowpass output filter.

Board replacement

If this board is replaced by a substitute board, the Service Monitor will need to be recalibrated.

Connections

The connections to this board are:-

PLA	Pin 1	Board ground.
	Pin 3	+12 V rail.
	Pin 4	Gain switching line from microprocessor board B2/1. +12 V selects 20 dB gain, -12 V selects 0 dB gain.
		Soldered connection from SMA connector supplying RF input signal from input attenuator A21.
RF link		Supplying Ist local oscillator signal from Ist local oscillator board A8/1. 1359.4 to 2409.3 MHz , +7 to +10 dBm.
RF link		Taking 1st IF signal to 2nd and 3rd mixer board A3. 1359.3 MHz, -40 dBm.

Power rails

The power rails onto this board are:-

Power rail	Entry point	Nominal current	Remarks
+12 V	PLA pin 3	16 mA (+20 dB amp. out of circuit)	36 mA (+20 dB amp. in circuit)

A +5 V supply is produced from the +12 V supply on this board.

Detailed description

Switch gain amplifier

Input signals to the Service Monitor are routed to this board via the input switching board A11/1 and the two stage input attenuator A21. The signal is fed to input capacitor C1 through the tray wall, using a co-axial connector. D12 and D13 provide input protection for the receiver. The printed inductor L20 with the capacitance of D12 and D13 form a low pass filter which improves the input return loss presented by the diodes which are inherently capacitive.

The preamplifier IC1 has a typical gain of 21 dB. The appropriate signal route is dictated by the diode switches formed by D2, D3, D4 and D5, which are controlled by the switching signal on PLA/4 and the driver circuit around TR1 to TR4. D3, D4 and D5 are all biased relatively hard on when selected, but D2 is not driven fully. This is because D2 provides a PIN resistance which improves the input return loss of IC1 when the amplifier is in circuit. The insertion loss of the bypass route, through D3 and D4, is approximately 0.5 dB.

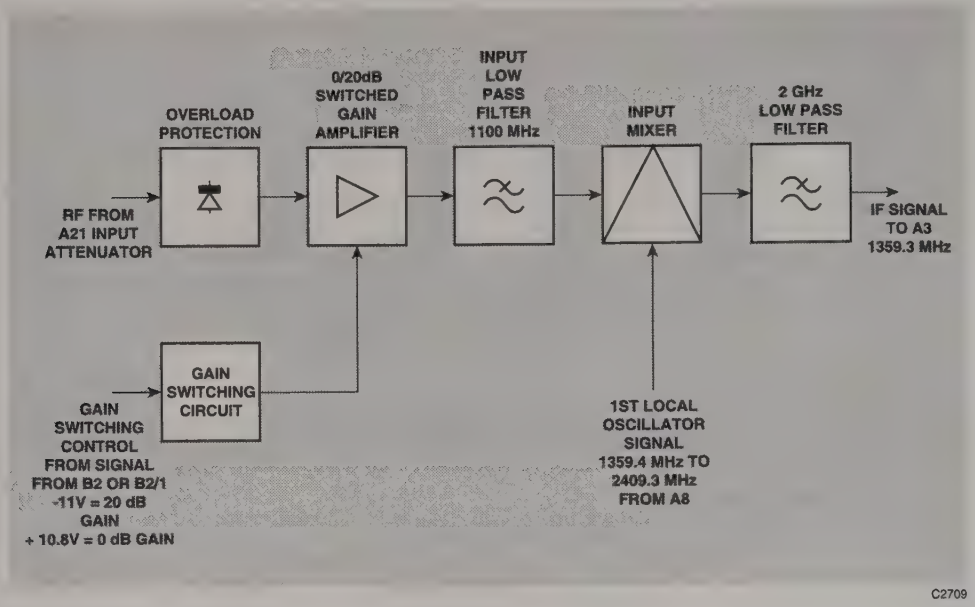

Fig. 1-9 Detailed block diagram of A2

The biasing networks (an example of which is L15, R23, R3 and L14) provide good signal blocking characteristics to 1.5 GHz. In the above example, L14 provides high frequency blocking, whilst L15 provides low frequency blocking. R23 dampens the resonance between the shunt capacitance of L15 and the series inductance of L14.

Input low pass filter and mixer

The mixer input filter is composed of surface mounted capacitors and printed inductors. It has a -3 dB frequency of 1100 MHz and a passband insertion loss of approximately 0.5 dB.

IC2 is a double balanced mixer with an insertion loss of approximately 9 dB. It is driven by a +7 dBm local oscillator signal generated on A8/1. The mixer output, which is the 1st I.F. signal of 1359.3 MHz, goes through a 3 dB pad R10, R11 and R12, followed by a 2 GHz printed filter which rejects unwanted mixer products. It is then routed to board A3, which contains the 2nd and 3rd frequency changing mixers.

A7/1 1st local oscillator control (44830/111)

Overview

This board forms part of a single loop fractional N synthesizer. When used with the 1st LO board, a signal is generated which covers the frequency range 1.359.3 - 2.409.3 GHz. The synthesizer is used as the receiver local oscillator.

Fractional N frequency division

Conventional frequency dividers allow only integer division ratios. The principle of the fractional N technique is this:-

- Dividing by N for some of the time and then dividing by N + 1 for the rest of the time, results in an average division ratio which is not necessarily an integer. However fractional N goes further than this, by switching through several different division ratios, according to a complex algorithm. The result of this is an average fractional division ratio as above, but with reduced fractional N sideband levels.

For more details see UK patent number 2140232B frequency Synthesizers.

Board replacement

Replacing this board with a substitute board does not necessitate any recalibration of the Service Monitor. However, gaining access to the board requires removal of the RF tray lid, which can change the frequency response of some points of the Service Monitor performance.

Connections

The connections to this board are:-

PLA	Pin 1	Board ground.
	Pin 3	-12 V rail.
	Pin 4	+5 V rail.
	Pin 5	+12 V rail.
	Pins 6 to 15	Control, address and data lines (TTL), from microprocessor board B2/1.
PLB		5 MHz TTL signal to phase detector on 1st local oscillator board A8/1.
RF link		1359 to 2409 MHz +3 dBm, RF reference signal from 1st local oscillator board A8/1.

Power rails

The power rails onto this board are:-

Power rail	Entry point	Nominal current
-12 V	PLA pin 3	70 mA
+5 V	PLA pin 4	150 mA
+12 V	PLA pin 5	

Detailed description

A detailed block diagram of A7/1 and A8//1 showing the interconnections between them which make up the control loop is given in Fig. 1-10 *Detailed block diagram of A7/1 and A8/1*

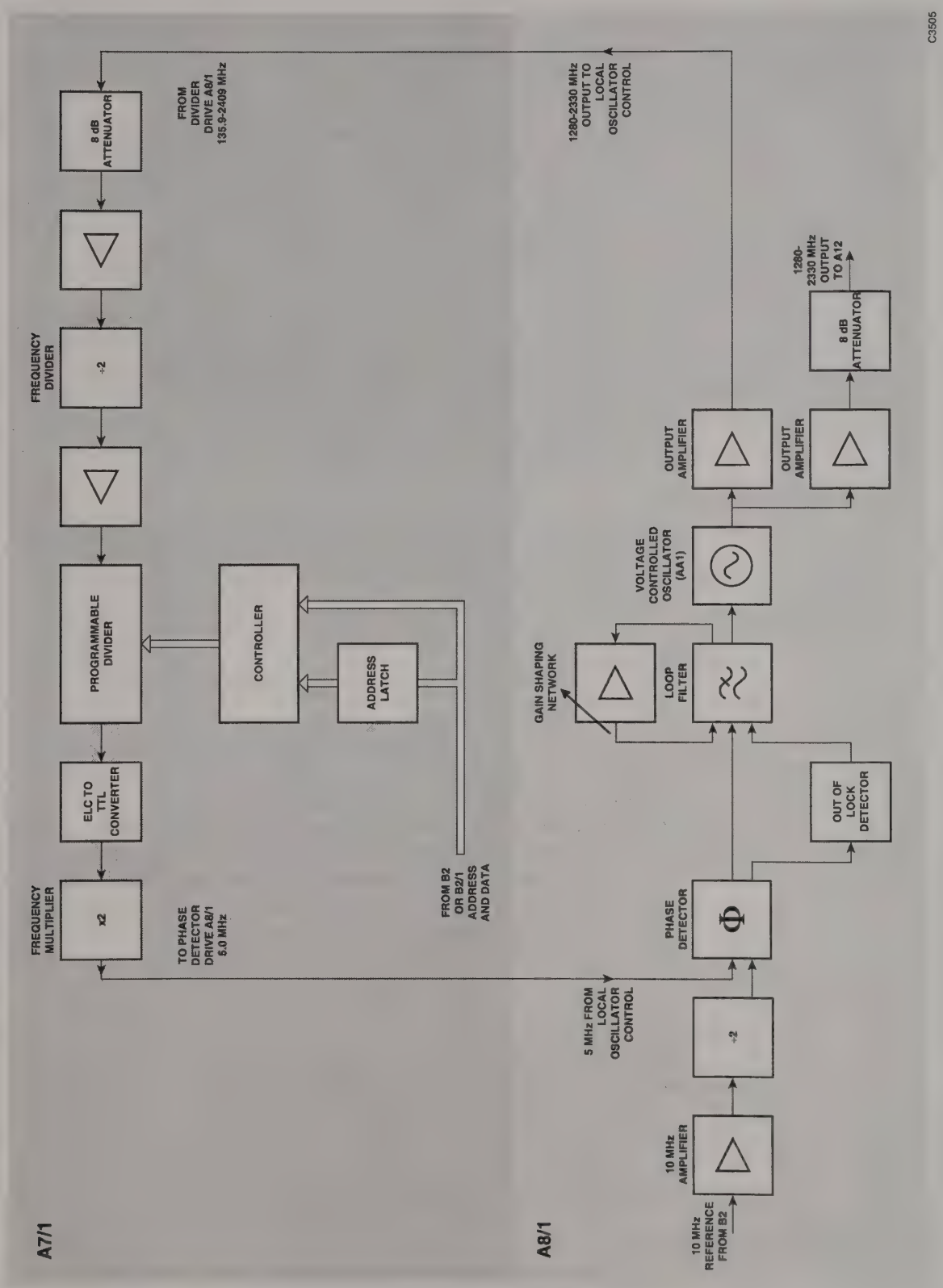

Fig. 1-10 Detailed block diagram of A7/1 and A8/1, showing the complete control loop.

Divider chain

The signal from the 1st LO board A8/1 (1359 to 2409 MHz), feeds into buffer IC6. The output from this buffer is applied to a divide by 2 prescaler IC5. Buffer amp IC4 passes the output from the prescaler to the CK1 and CK2 inputs of programmable divider IC3.

The division ratio of the programmable divider is controlled by the microprocessor to produce a 2.5 MHz at the lock.

The output of IC3 is amplified to TTL levels by TR1, TR2 and TR3. IC1c is configured as a frequency doubler, converting both positive going and negative going edges into pulses. The output from this goes to PLB and forms the 5 MHz drive for the phase detector on the 1st LO board. IC1b provides an output to drive the fractional N controller IC7.

Fractional N controller

This device obtains information from the microprocessor board, converts it to control the programmable divider and consequently the division ratio. Multiplexed address and data is received at PLA 8-15. Address decoding is performed by IC8 in conjunction with line AL in PLA7. The write command on pin 16 enters the board on PLA6.

A8/1 1st local oscillator (44830/112)

Overview

This board, in conjunction with the 1st local oscillator controller A7/1, forms a fractional-N phase locked loop. It produces frequencies in the range 1359.3 MHz to 2409.3 MHz at a nominal level of +7 dBm. The signal is used as the 1st local oscillator signal for the receiver section of the Service Monitor. The components forming the VCO are on a daughter board AA1. The main board contains the following sections:-

- 10 MHz reference amplifier and divider / pulse generator
- A digital phase / frequency detector
- Out of lock detector
- The loop gain shaping network
- The phase lock loop filter
- Output buffering and amplification to drive the receiver 1st mixer and the dividers on A7/1
- Power supply conditioning

The design of this board has many similarities to Duplex Oscillator board A13/1, (44830/100). Therefore the technical descriptions of these will contain identical or similar passages. Both use a Voltage Controlled Oscillator daughter board AA1 (41830/160)

Board replacement

If this board is replaced by a substitute board, the Service Monitor will require recalibration.

Connections

The connections to this board are:-

PLA	Pin 1	Board ground.
	Pin 3	-12 V rail
	Pin 4	+5 V rail.
	Pin 5	+12 V rail.
	Pin 6	+35 V rail.
PLB	Pin 1	Board ground..
	Pin 2	Master Clock signal, 10 MHz 0 dBm. From microprocessor board B2/1.
	Pin 3	Chassis (0 V).
PLC	Pin 1	5 MHz, TTL signal from frequency divider on 1st local oscillator control board A7/1.
PLE	RF link	1359.4 to 2409.3 MHz, +7 dBm, 1st local oscillator output signal to the input mixer board A2.
PLF	RF link	1359.4 to 2409.3 MHz, +3 dBm, 1st local oscillator output signal to 1st local oscillator control board A7/1.

Power rails

The power rails onto this board are:-

Power rail	Entry point	Nominal current	Remarks
+35 V	PLA pin 6	22 - 40 mA	Varies
-12 V	PLA pin 5	30 - 60 mA	with
+5 V	PLA pin 4	40 - 68 mA	frequency
+12 V	PLA pin 3	67 mA	

A +32 V supply is produced from the +35 V supply on this board.

Detailed description

A detailed block diagram of A7/1 and A8//1 showing the interconnections between them which make up the control loop is given in Fig. 1-10 *Detailed block diagram of A7/1 and A8/1*

10 MHz Reference amplifier, divider and pulse generator

The 10 MHz, +5 dBm reference signal from the microprocessor board B2/1, is amplified by TR4 to CMOS levels. The amplified signal is applied to Flip-flop IC5a, which toggles its output on each positive edge at its input to produce a 5 MHz signal.

The Q and $\overline{Q}$ outputs from IC5a are fed to the pulse generator circuit formed by IC6a, R23 and C13, to produce short pulses which drive one side of the Phase / Frequency detector at IC8a.

Phase / Frequency Detector

The four state phase / frequency detector circuit, comprises of IC7, IC8 and IC9.

Pulses at 5 MHz from IC6a are applied to IC8a and the divided down pulses from A14/1 to IC7a.

The divider must have extremely linear operation. IC7 and IC8 are dual device packages, but one device only of each is used and the inputs of the unused section are grounded. The use of separate packages for each input of the detector prevents interaction between edges from the two sides of the detector, which might occur if the a single package were used.

When the inputs to the detector are in antiphase, the outputs at TP11 and TP12 are square waves at its operating frequency.

Out of lock detector

Under normal conditions of phase lock, the signals on IC7a, pin 6, and IC8a, pin 8 are low with narrow positive going pulses. This voltage is averaged by R25,26 and C14 and results in TR5 being turned off. This causes IC6c output to be low, D2 to be extinguished, IC6d output to be high, TR6 to be turned on and TR7 to be turned off, thereby allowing normal loop action to ensue.

If the loop is totally out of lock for any length of time, the average duty cycle at IC9 pin 2 or 13 will rise to 50%, causing the voltage on TR5 base to rise sufficiently to turn TR5 on. This in turn enables the astable multivibrator built around IC6c and IC6d, which has a frequency of approximately 3 Hz..

The astable has two purposes. LED D2 flashes as a fault finding aid and it prevents the loop from getting "stuck" at one end

During the periods when IC6d output is low, IC8a is reset so TP12 is high and TP11 is low. This causes the loop integrator output (TP17) to ramp high. In this state however, TR6 if off and TR7 on. This clamps the integrator output voltage through D1, forcing the VCO to approximately the centre of its range. During the other half of the cycle, when IC6d output is high, normal loop conditions are restored which allows the VCO to sweep back into lock.

Loop gain control and shaping network

The outputs of the phase / frequency detector are applied to the control inputs of CMOS switch IC11. This results in the loop filter, via R38, being alternately connected to a positive voltage on

C17 and an equal value negative voltage on C18. In this way, control of the loop gain is accomplished by varying the magnitude of the voltages at C17 and C18.

The gain shaping network is based around IC10a, b and c. It is configured to vary the voltage on C17 and C18 according to the voltage on the VCO tuning line at PLD2. This arrangement maintains the overall loop gain at an almost constant value. The circuit arrangement and choice of component values, configure the network to have three gain steps, with progressively higher gains.

At low and medium tuning voltages, IC10b has a gain of -R12/(R10+R11), which is backed off at low tuning voltages by IC10a. This gives an overall gain of -(R12/(R10+R11)-R7/R6×R8) until D3 clamps IC10a output.

At higher tuning voltages, when D4 turns on, the gain of IC10b is increased to -R12/R10.

R9 providing a DC offset.

IC10a inverts the signal at TP6. This provides a voltage which tracks that at TP6, but with opposite polarity. The outputs of the gain shaping network are heavily filtered. This reduces, to an acceptable level, the noise that would otherwise be presented to the loop.

When the loop is in lock at a steady state, the outputs of the phase / frequency detector at TP11 and TP12, have a 50% duty cycle. This makes the magnitudes of the voltages on C17 and C18 equal, therefore the average DC voltage applied to the loop filter is zero. A phase error at the phase / frequency detector input causes the duty cycle to change, which produces unequal voltages on C17 and C18. The average voltage at IC11 output will not be zero. This causes the loop filter to apply a correcting voltage to the VCO, thereby correcting the phase error.

Loop Filter

A low pass filter is formed by L3, L4, L5 and L6 together with C19, C20 and C21. This rejects fractional-N noise and 5 MHz reference breakthrough. This filter also has a notch centred around 20 kHz, to provide rapid roll off to the loop gain outside the loop bandwidth of (approximately) 8 kHz. It also reduces residual added noise, without increasing phase shift at 8 kHz, which would cause the loop to be under-damped. Input impedance is 330 Ω, provided by R38. The output impedance of the filter is high.

The loop integrator is based around IC12 and associated components. Poles are formed by R41 and C24 at 175 Hz and by R42 and C23 at 16 kHz. Zeroes are formed by R39 and C22 at 720 Hz and by R42 and C24 at 1.6 kHz. As such, the integrator is 2nd order from around 200-700 Hz. This helps to provide more loop gain at frequencies below 700 Hz than would be possible with a simpler 1st order integrator. Another important advantage of this arrangement is that op-amp (and input resistor) noise is reduced at frequencies above a few hundred Hz, by potential divider action of R41 and R42, thereby allowing reasonable impedance in the preceding filter.

Voltage controlled oscillator

The VCO takes the form of a daughter board AA1 (44830/160) which is mounted on the main PCB. It is screened by a machined aluminium cover. The VCO requires a supply of around 11V, and a tuning voltage of approximately 1V to 25V. The VCO output is approximately -10 dBm. R5, R6 and R7 form an attenuator pad to reduce the effects of impedance changes on the VCO output.

See The technical description of AA1 for more details.

Output amplifiers

The output from the VCO is buffered by IC13 before being split to two paths by R45, R46 and R47. One path feeds the signal to the 1st mixer in the receiver through IC14. The matching pad R52, R53 and R54, improve the match into the 1st mixer. The other path, through IC15 feeds the divider board A7/1. These amplifiers are driven into compression to help reduce any variations in output power, which might be present due to frequency and temperature.

Supply Conditioning

IC1 provides a +30 V supply for IC12 from the +35V rail. IC12 drives the VCO tuning line.

IC2 provides a smooth regulated -5V from the -12V rail to power IC11 and IC12.

TR1, TR2 and TR3 remove any supply ripple and noise from the +12V, +5V and -5V supplies respectively, while keeping the voltage drop to a low level. The gain provided by these transistors allows higher value series resistors and smaller decoupling capacitors to be used, while keeping the voltage drop to a reasonable level.

R55 biases TR1 close to, (but not in) saturation. This further reduces the voltage drop in the +12V smoothing circuit.

AA1 Voltage controlled oscillator (41830/160)

Overview

The AA1 voltage controlled oscillator is fitted on to the A8/1 1st local oscillator board.

Board replacement

Replacing this board with a substitute board does not necessitate any recalibration of the Service Monitor. However, gaining access to the mother board requires removal of an RF tray lid, which can change the frequency response of some points of the Service Monitor performance.

Connections

The connections to this board are made by direct soldering to the mother board. They are:-

+12 V	From +12 V line on mother board.
ENABLE	Not used with either mother board.
TUNE	Frequency control signal from control loop.
RF OUT	RF output signal, -1 dBm to -6 dBm.

Power rails

This board is powered by a +12 V supply from the mother board.

Detailed description

This VCO is in the form of a daughter board which is mounted on the voltage controlled oscillator board. When used in this Service Monitor, it is used on A8/1. AA1 generates a signal between 1.28 GHz and 2.41 GHz for tuning voltages of approximately 5 V to 24 V. The oscillator is designed to have low phase noise for the range covered. The actual range of operation possible at room temperature is approximately 1 GHz to 2.5 GHz.

TR1 generates a negative resistance at its emitter. A resonator formed by D1, D2, C5 and printed stub L4, is connected to the emitter. Bias is set by R1, R2 and R3. The VCO can be turned off by pulling the ENABLE line low. This feature is not used in this Service Monitor.

R4 presents optimum collector load to TR1 for operation over the required range. R5, R6 and R7 form an attenuator pad to reduce the effects of impedance changes on the VCO output.

A3 2nd & 3rd mixer (44829/923)

Overview

A3 contains the 2nd and 3rd mixers which translate the 1st IF of 1359.3 MHz to 79.3 MHz and then to the final IF of 10.7 MHz. It also provides a buffered version of the 2nd IF which is routed to the 2nd and 3rd local oscillator board A9/1. There it is converted to 10.7 MHz and routed to the audio processor board B1/2, for demodulation in Look and Listen mode.

Board replacement

If this board is replaced by a substitute board, the Service Monitor will need to be recalibrated.

Connections

The connections to this board are:-

PLA	79.3 MHz -30 dBm, Look and Listen IF signal to 2nd and 3rd local oscillator board A9/1
PLB	90 MHz swept 0 dBm, 3rd local oscillator signal from swept local oscillator board A10.
PLC	Sweep control signal (TTL) from Audio processor board B1/2, through microprocessor board B2/1.
PLD	10.7 MHz -2 dBm (nominal), 3rd IF signal to 10.7 MHz IF amplifier board A4/1.
PLE	+12 V supply from 10.7 MHz IF amplifier board A4/1, via A10.
RF link	1359.3 MHz -40 dBm,. 1st IF signal from the input mixer board A2.
RF link	1280 MHz 10 dBm, 2nd local oscillator signal from 2nd and 3rd local oscillator board A9/1.

Power rails

There is no direct power rail connection to this board. A +12 V supply, derived from the 10.7 MHz IF amplifier board A4/1, is provided through PLE. This is given addition filtering to provide +12 V (D), which is further filtered to provide +12 V (A).

Power line	Entry point	Nominal current
+12 V	PLE pin 3	80 mA

Detailed description

2nd mixer

The first IF signal of 1359.3 MHz is fed to the board from the input mixer board A2. It is initially filtered by a lowpass filter comprising of printed inductors L11, L12, L13, C38, C39, and a dielectric bandpass filter FL1, then applied to double balanced mixer IC1. This mixer converts the 1st IF to the 2nd IF of 79.3 MHz. It is driven by a +7 dBm, 1280 MHz local oscillator signal, generated on 2nd and 3rd local oscillator board A9/1, and fed to the mixer through C23. The 2nd mixer adds an insertion loss of approximately 8 dB to the signal path. The 2nd IF signal is extracted by the 79.3 MHz bandpass filter L2, L3, L4, C2, C3, C45, C46, C47, C48, R6 and R7. The output from the filter is amplified by TR1, TR2 and TR3.

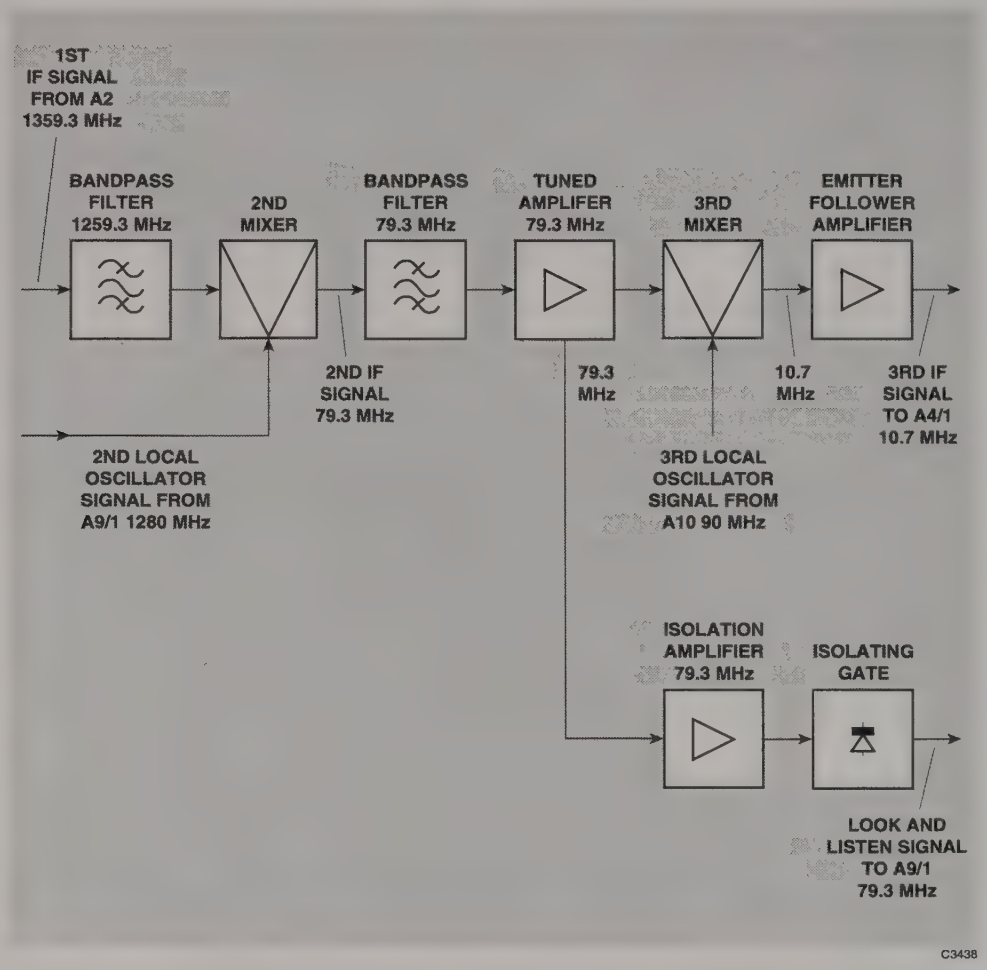

Fig. 1-11 Detailed block diagram of A3

79.3 MHz 2nd IF

The bandpass filter has three notches in the stop-band. The filter centre frequency is at 79.3 MHz with notches at 73.95 MHz, 84.65 MHz and 100.7 MHz. The notch at 84.65 MHz rejects the out of band signal that would be converted to 5.35 MHz by the 3rd mixer. A signal at 5.35 MHz is undesirable as any subsequent non-linearity in the IF strip would then generate a 10.7 MHz 2nd harmonic, which is the final IF frequency and would be detected. The notch at 100.7 MHz rejects the 3rd mixer image frequency. The notch at 73.95 MHz is inserted to be at an equal offset from 79.3 MHz as 84.65 MHz, to make the filter symmetrical. After filtering and amplifying the signal goes to the input of 3rd mixer IC2.

3rd Mixer

The 3rd mixer is driven by a 90 MHz, 0 dBm signal, generated on A10, and fed to the mixer through C16. The mixer operating point is set by R15, and the mixer bias voltage is set up by Zener diode D2. The gain of the mixer, which is approximately +26 dB, is set by R17. The 10.7 MHz output is an open collector which is tuned by L7 and C17, with a bandwidth of approximately 3.5 MHz. The output signal is passed through C19 and buffered by the common emitter amplifier TR4, to a level of approximately -2 dBm. From board A3 it is routed via PLD to the 3rd IF amplifier on board A4/1.

2nd IF path to A9/1

A feed from the second IF amplifier provides a 79.3 MHz signal which is used when operating in the Look and Listen mode. This is down-converted on board A9/1 and demodulated on board B1/2.

The signal path consists of the 79.3 MHz isolating amplifier and an isolation gate. The amplifier, based around TR5 and TR6, is a cascode arrangement, used to improve the reverse isolation. The amplifier gain is approximately 9 dB. The TR7 stage buffers the resultant signal.

The isolating gate, consisting of D3, D4, D5 and associated components, blocks the IF signal when not in Look and Listen mode. Failure to do so results in a spurious 10.7 MHz signal on the spectrum analyzer display. When in any mode other than Look and Listen, there is a 5V DC voltage on PLC. This voltage level switches IC3a and b outputs to 0V and +12V respectively, which closes the diode gate, preventing the IF signal from reaching PLA.

When in Look and Listen mode, the 5V DC voltage on PLC is replaced by a 5V square wave. This is integrated by R46 and C55, resulting in a reduced voltage at the inputs of IC3a and IC3b which changes their output voltages to 12V and 0V. Hence, IC3 opens the diode gate and allows the signal to pass to A9/1. The output signal has a level of approximately -30 dBm and the gate has approximately 60 dB isolation.

A10 90 MHz swept local oscillator (44829/930)

Overview

This board contains the 90 MHz local oscillator for producing the 10.7 MHz 3rd IF signal. In all operating modes, other than 'Look and Listen' mode, it provides a 90 MHz signal which is mixed with the 2nd IF of 79.3 MHz to produce the 3rd IF signal.

When the 'Look and Listen' mode is being used, this oscillator is swept about 90 MHz, to provide the display sweep. During the sweep flyback, it is phase locked to a 90 MHz reference signal, so that the sweep frequency will remain centred around 90 MHz.

Board replacement

If this board is replaced by a substitute board the Service Monitor will need to be recalibrated.

Connections

The connections to this board are:-

PLA	Pin 1	Board ground.
	Pin 3	-12 V rail.
	Pin 5	+12 V rail.
	Pin 6	Sweep control signal (TTL) from B1/2, through B2/1, and A9/1.
PLB		90 MHz, -10 dBm, 3rd local oscillator signal from 2nd and 3rd local oscillator board A9/1.
PLC		90 MHz, -5 dBm, 3rd local oscillator signal to 2nd and 3rd mixer board A3.
PLE		Look and Listen sweep signal (analogue) from audio processor board B1/2.

Power rails

The power rails onto this board are:-

Power rail	Entry point	Nominal current
-12 V	PLA pin 3	20 mA
+12 V	PLA pin 5	64 mA

Detailed description

Locked mode

Varactor controlled oscillator

TR1 is configured as a varactor controlled oscillator with positive feedback from its emitter to base. The oscillator is tuned by the combination of preset inductor L1, with capacitive elements C3, C4, C36 and varactor diode D1. The voltage required across D1 to produce an output frequency of 90 MHz is approximately –5.3 V. Under locked conditions the sweep signal at TP1 is 0 V, so the DC base bias on TR1 is approximately –0.3 V, IC3a is closed so that the phase detector output of approximately 5 V is applied to D1 cathode. The oscillator output is taken from the split emitter load which provides an output signal of approximately 40 mV

Output amplifier

The output from the oscillator to the 3rd mixer is buffered by TR2, with the drive provided from the emitter follower TR3. The signal level at PLC has a nominal level of –5 dBm.

A signal taken from the emitter of TR2, and buffered by TR4, provides the signal for the phase detector.

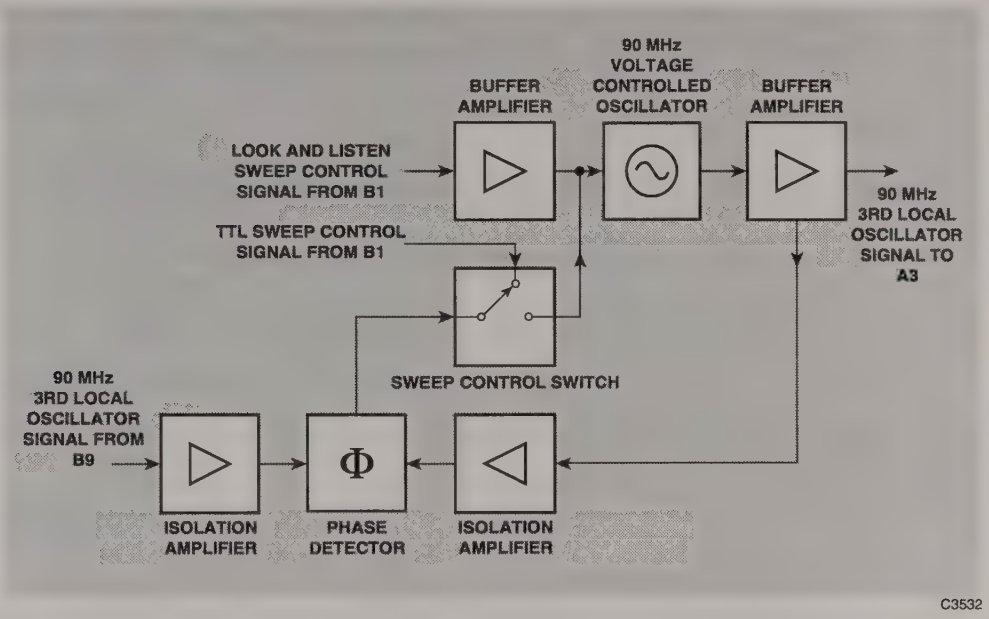

Fig. 1-12 Detailed block diagram of A10

Phase detector

IC2 is a Gilbert cell mixer ,which produces two anti-phase output signals, at the difference frequency between the LO input, pin 5, and the input to INA, pin 13. Each of these inputs is obtained from identical buffer circuits built around TR4 and TR5, which provide 6 dB gain. The input through TR4 to the LO input is from the oscillator output as described above, while the signal from TR5 to INA is from the 90 MHz reference oscillator on the 2nd and 3rd local oscillator board A9/1. This signal enters the board through PLB at a level of –10 dBm.

The anti-phase outputs from A, pin 3, and B, pin 14, are fed into IC1(b), which provides a single ended output at the difference frequency. When the oscillator is locked, the phase detector output will be a steady DC voltage, which biases the varactor diode. A frequency difference will result in a variation in the phase detector output which will correct the frequency.

The output voltage level from the A and B outputs of IC2 is set by the values of R26.

A single pole loop filter, R39, R40 and C29, provides a capture range of ±500 kHz.

Swept mode

When operating in the swept mode, the sweep signal from audio processor board B1/2 sweeps the frequency of the oscillator by up to ±500 kHz about the centre frequency of 90 MHz. During the sweep flyback period the oscillator is locked by the phase detector, in order to maintain the centre frequency at 90 MHz, .

Centre frequency locking

During the sweep flyback period, the SWEEP CONTROL line from board A9/1 through PLA, pin 6, is high. This opens IC3d which closes IC3a. The sweep signal is held at 0 V during the flyback period, therefore the VCO locks to the 90 MHz reference as in the locked mode.

At the end of the flyback period, the SWEEP CONTROL line goes low, closing IC3d and opening IC3a. The charge across C30 maintains the voltage on D1 cathode. The sweep signal from the audio processor board B1/2, through PLE pin 3, is inverted by IC1a. It is then fed to potential divider R6 and R7, before being applied to the anode of the varactor diode. As C30 is in series with D1, the sweep signal will be algebraically added to the loop control voltage. This will result in a negative frequency offset at the start of the sweep and a positive frequency offset at the end, while the centre of the sweep remains at the tuned frequency.

The sweep signal from PLE can be monitored on test point TP1. A negative voltage on TP1 produces a negative frequency offset, a positive voltage produces a positive frequency offset. The sweep sensitivity is typically 200 kHz/V.

Setting L1

L1 is pre-adjusted so that the centre of the voltage controlled oscillator capture range is 90 MHz. When the frequency is locked at 90 MHz the voltage on test point TP3 is typically +5.0 V.

A9/1 2nd & 3rd local oscillator (44830/097)

Overview

This board contains the following:-

- A phase locked loop oscillator to produce a fixed 1280 MHz signal, used as the Service Monitor receiver 2nd local oscillator and as a reference signal for the signal generator section.
- A phase locked loop oscillator to produce a fixed 90 MHz signal, used as the receiver 3rd local oscillator.
- The 3rd mixer and IF stages for the listen IF path.

Board replacement

If this board is replaced by a substitute board, recalibration of the Service Monitor will be necessary.

Connections

The connections to this board are:-

PLA	Pin 1	Board ground.
	Pin 3	-12 V supply from 10.7 MHz IF and log amplifier board A4/1.
	Pin 4	+5 V rail.
	Pin 5	+12 V supply from 10.7 MHz IF and log amplifier board A4/1.
	Pin 6	Linked to PLJ
PLB		79.3 MHz, -30 to -100 dBm, 2nd IF Listen signal, from 2nd and 3rd mixer board A3.
PLC		10.7 MHz 0 to –70 dBm, Listen IF signal, to audio processor board B1/2.
PLD		90 MHz-10 dBm, 3rd local oscillator signal, to 90 MHz swept local oscillator board A10.
PLE		1280 MHz +7 dBm, 2nd local oscillator signal to 2nd and 3rd mixer board A3.
PLF		10 MHz, 0 dBm, master clock signal from microprocessor board B2/1.
PLG		1280 MHz –5 dBm, 2nd local oscillator signal to RF generator mixer board A12/1.
PLJ		Linked to PLA pin 6. Sweep control signal (TTL) from microprocessor board B2/1 to 90 MHz swept local oscillator board A10.

Power rails

The power rails onto this board are:-

Power rail	Entry point	Nominal current	Remarks
+5 V	PLA pin 4	270 mA	235 mA if 70 MHz fails

In addition to the above, the quietened supplies listed below are routed from the A4/1 board.

Power line	Entry point	Nominal current	Remarks
-12 V +12 V	PLA pin 3 PLA pin 5	70 mA 135 mA	130 mA* 150 mA* * If 10 MHz standard fails

A +10 V supply and a -5 V supply are produced on the board from the above supplies.

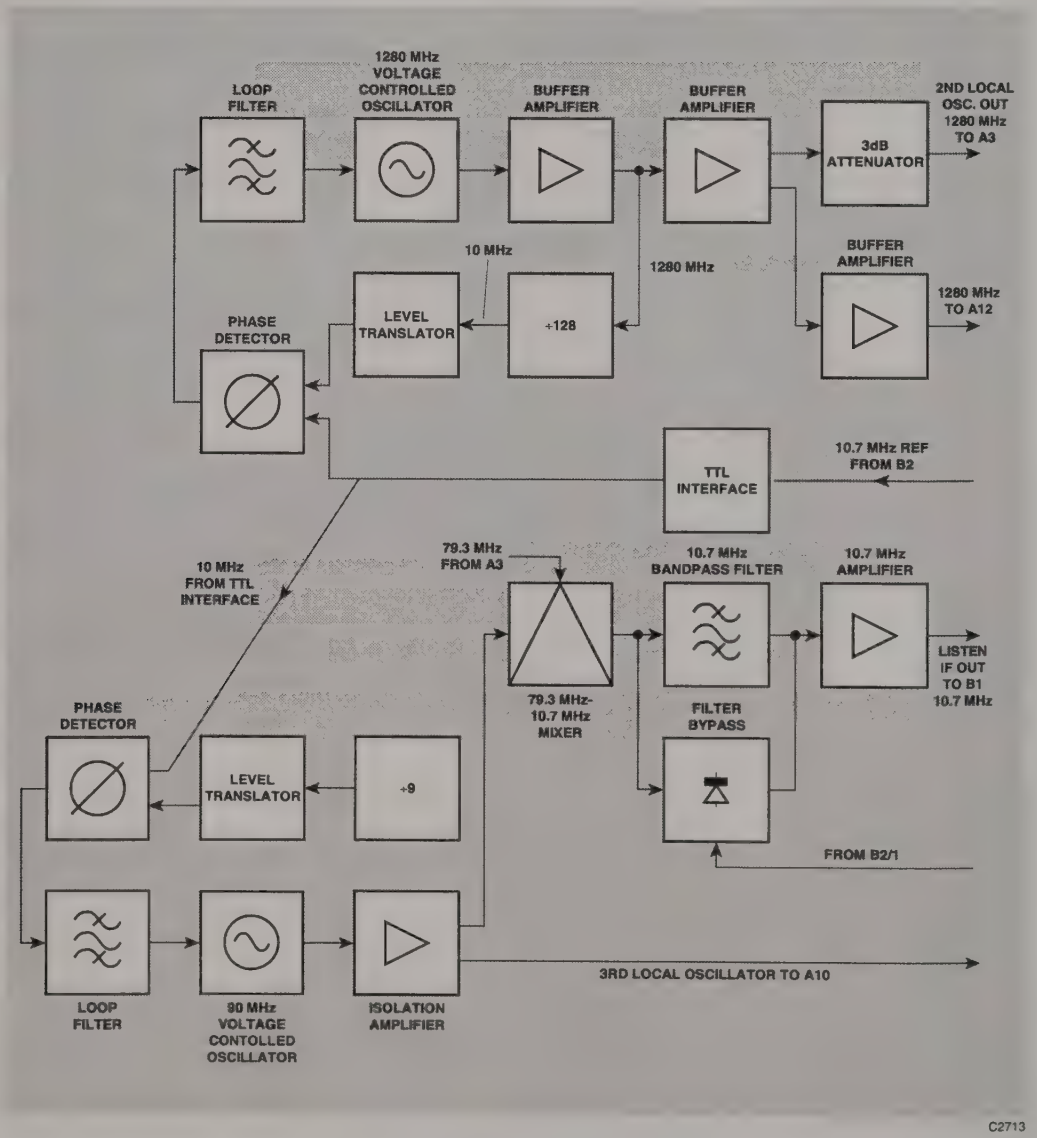

Fig. 1-13 Detailed block diagram of A9/1

Detailed description

1280 MHz Local Oscillator

The complete 2nd local oscillator is composed of the voltage controlled oscillator built around TR1, and its associated phase locked loop. The voltage controlled oscillator free runs at about 1280 MHz. Its output is taken through C14 to buffer amplifier IC3. The output from IC3 is fed to a 2nd buffer IC4.

A portion of the output from IC3 is applied to IC6, a low noise divider, through R10. This divider is capable of various division ratios but here is Configured to divide by a fixed ratio of 128. therefore the signal at the output of the divider (pin 21) is at 10 MHz when the loop is locked. The ECL output is converted to TTL levels by TR2 and applied to one input of the phase/frequency detector IC7 and IC8. The 10 MHz reference clock signal, from the TTL interface circuit, is applied to its other input. The resulting error signal is filtered by IC9 and associated components, and applied as a correction signal, through R30, to the voltage controlled oscillator. Removable link PLK/SKK is provided to open the loop to aid fault finding.

The 1280 MHz signal amplified and buffered by IC4, is branched through two paths. The path through the 3 dB pad R15, R16 and R17 is routed to the 2nd mixer on A3. The path via IC5 is routed to the signal generator system.

90 MHz Local Oscillator

The 90 MHz 3rd local oscillator is a phase locked loop composed of TR8, IC11, IC12, IC13, IC14 and associated components. TR8 forms a 90 MHz voltage controlled oscillator, buffered by TR9. The 90 MHz signal is further buffered and split 3 ways by TR10, TR11 and TR12. The path through TR12 drives IC11, a divider Configured to divide by 9. Its output at pin 15 is level shifted to TTL by TR13 and applied to one input of the phase/frequency detector IC12 and IC13. The 10 MHz reference, from the TTL interface, is applied to the other input of the phase/frequency detector. The error signal is filtered by IC14 and associated components before being fed back to the voltage controlled oscillator through R55. Removable link PLM/SKM is provided to open the loop for fault finding.

The 90 MHz signal is buffered by TR11 and fed via PLD to the Service Monitor receiver 3rd mixer on A3.

Listen IF path

A 79.3 MHz, 2nd IF signal from A3 is fed to this board through PLB and then to buffer TR3. The output from this buffer is applied to one input of mixer IC10. A 90 MHz signal from TR10 is applied to another input of IC10. The oscillator function of this IC is not used.

The mixed output is then passed through the IF amplifier and 10.7 MHz bandpass filter TR4, XL1a, XLb and TR5, which has a bandwidth of 15 kHz. The IF signal is then amplified by TR6 and TR7, then routed to board B1/2 for further amplification and demodulation.

D3, D4 and IC14b allow the 15 kHz filter to be bypassed using the control line on PLA7. When bypassed, the signal is routed via D3, instead of through the filter. This path results in a wideband IF output from PLC which can be switched in or out as required.

A4/1 10.7 MHz IF & log amplifier (44830/103)

Overview

This board contains the switched IF bandwidth filtering and logarithmic amplifier for the spectrum analyzer, and a buffer feeding the 10.7 MHz IF to the demodulator on the Audio Processor board, BI. The IF filters are composed of a 3 MHz L/C filter, a 300 kHz ceramic filter and a four stage crystal filter providing 30 kHz, 3 kHz, and 300 Hz bandwidths.

Fig. 1-15 shows the three signal paths of the filtering options in simplified block form.

Board replacement

If this board is replaced by a substitute board, the Service Monitor will require recalibration.

Connections

The connections to this board are:-

PLA		10.7 MHz IF signal from 2nd and 3rd mixer board A3
PLB		10.7 MHz bandwidth filtered IF signal to audio processor board B1/2.
PLC		Log amplifier output to the microprocessor board B2/1. 0 V = bottom of spectrum analyzer display, +5 V = top of spectrum analyzer display.
PLD	Pin 1	Board ground.
	Pin 3	-12 V rail.
	Pin 4	+12 V rail.
	Pins 5 to 8	Bandwidth filter switching signals (TTL) from microprocessor board B2/1.
PLE		10.7 MHz bandwidth filtered IF signal to optional SSB demodulator board A15.
PLF	Pin 3	-12 V supply .with additional filtering to boards A8/1, A9/1 and A10.
	Pin 4	+12 V supply .with additional filtering to boards A8/1, A9/1 and A10.

Power rails

The power rails onto this board are:-

Power rail	Entry point	Nominal current
-12 V	PLD pin 3	235 mA
+12 V	PLD pin 4	240 mA

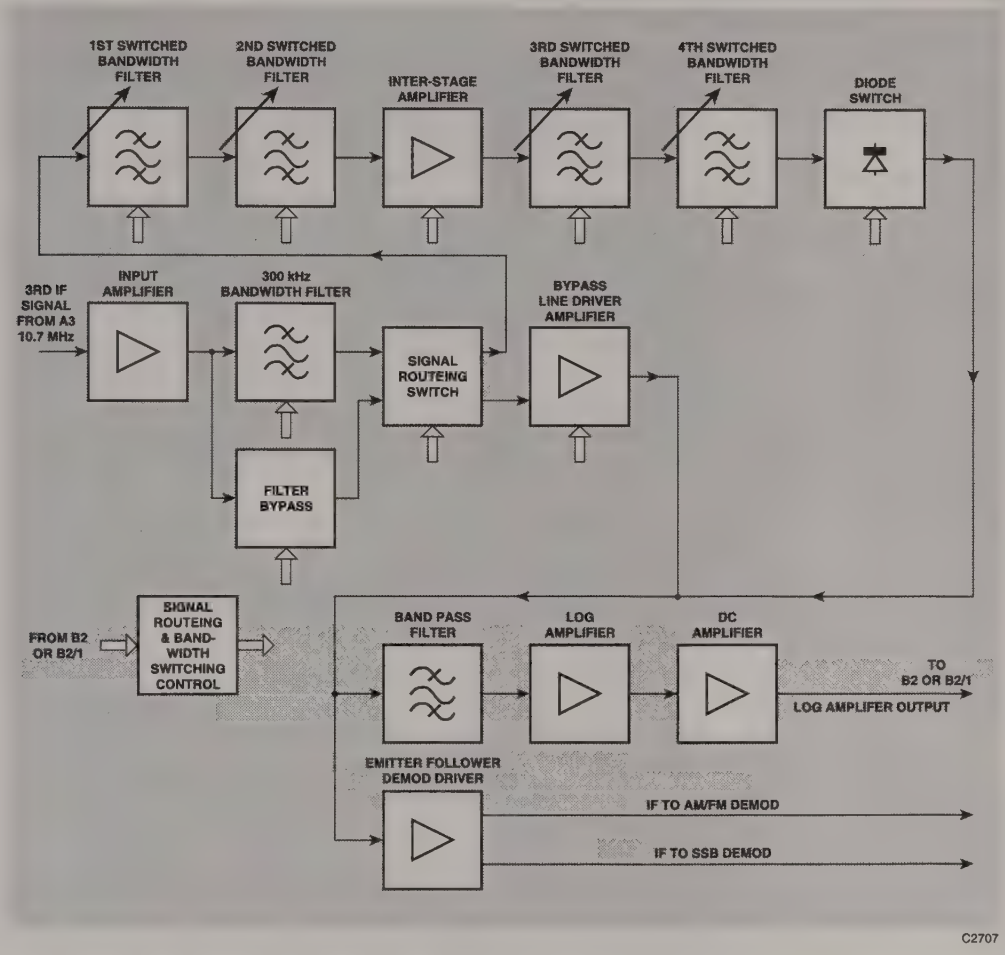

Fig. 1-14 Detailed block diagram of A4/1.

Input Amplifier.

The 10.7 MHz IF signal from A3 enters the board through connector PLA. The signal level is -2 dBm, measured using a low loss probe.

L27 is the third element in a three pole L/C 'T' filter. The inductor and capacitor which are the first and second elements are located on A3. The purpose of the 'T' filter is twofold. Firstly, it restricts HF content from the 3rd mixer, which would otherwise be detected by the logarithmic amplifier. Secondly, it removes the capacitive loading of the coaxial lead connecting A3 to A4/1 by incorporating the stray capacitance in the filter design.

IC6 is a current feedback amplifier which has excellent intermodulation distortion performance and is Configured to have a nominal gain of 13 dB. R4 provides adjustment to cater for IF strip gain variations.

Detailed description

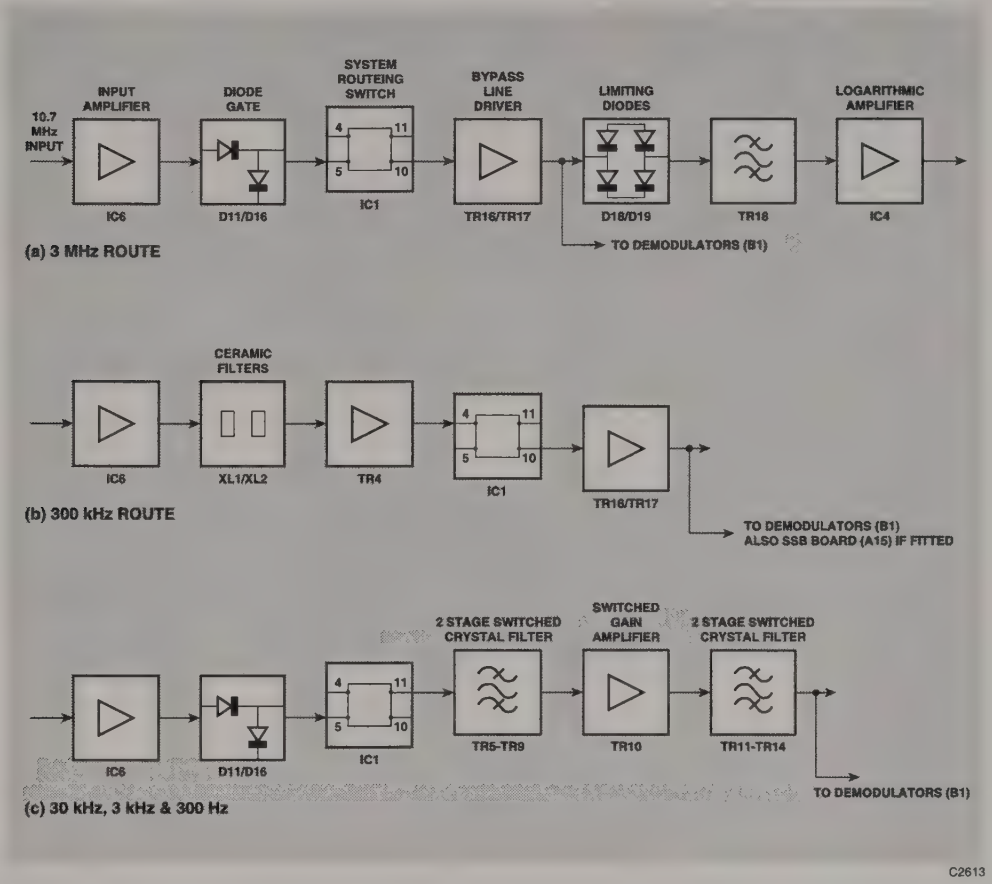

Fig. 1-15 Signal routeing for alternative bandwidth filters

3 MHz Filter Routeing.

From IC6, the signal passes through the diode gate consisting of D11 and D16 to pin 5 of the FET switch IC1. A portion of the signal is fed forward by R130 and R131 to the FET gate (pin 6) to aid linearity. This feedforward technique is applied on all signal inputs to IC1. The substrate of IC1 is biased at -4V by D17 and R12 to further improve its linearity. From IC1 pin 10, the signal passes to the bypass line driver circuit, consisting of TR16 and TR17. This is a complementary emitter follower circuit which is capable of driving the long capacitive track to the log amp. L2, C128 and C129 form a notch filter to reject 90 MHz 3rd LO breakthrough from A3. From the line driver, the signal passes through the D12 diode switch to the diode limiting gate of D18 and D19. This circuit limits the input to the log amp to a maximum level of +14 dBm. This is required as levels above this cause the log amp output to crowbar. In this crowbarred state, the output does not represent the true IF level and the receiver level autoranging can fail. The signal then passes through the final bandpass filter based around TR18, before entering the log amp inputs. The bandpass filter has a -3 dB bandwidth of approximately 3.5 MHz.

300 kHz Filter Routeing.

From IC6, the signal passes through the ceramic filter consisting of the matched pair XL1 and XL2. These provide a relatively rectangular frequency response. Matching to the filter is performed by R7 and R17. The common emitter stage, based around TR4 recovers the gain lost through the filter. The signal enters the FET switch on pin 4 and leaves on pin 10. It then passes to the log amp through the TR16, TR17 line driver, D18, D19 limiter, and the TR18 bandpass filter in the same way as for the 3 MHz routeing.

30 kHz, 3 kHz and 300 Hz Filter Routeing.

From IC6, the signal passes through the D11, D16 diode gate to IC1 pin 5, as for the 3 MHz routeing. However, the signal leaves IC1 on pin 11. It then enters the first of four similar crystal filter sections. Each section represents one pole of what is a cascaded four pole arrangement.

The operation of all sections is similar and will only be described for the first section based around XL3. TR5 forms an input buffer. The resonant tank circuit of L4 and C21 modifies the centre frequency of the filter to null the effect of stray board reactance thereby allowing the crystal response to be centred around 10.7 MHz.. The shunt resistors R32, R33 and R34 alter the Q of the tank circuit to achieve the three desired bandwidths (R32 for 30 kHz, R33 for 3 kHz and R34 for 300 Hz). R33 and R34 are switched into circuit as required by D1, D2 and associated biasing components. However, when the tank circuit is shunted by the low value of R34 (300 Hz filter selected), its tuning effect is diminished. Therefore C17 is used to tune the 300 Hz filter centre frequency. Additionally, the stray parallel capacitance of the crystal creates an unwanted notch in the filter response. The effect of this stray capacitance is nulled by feeding a portion of the input signal across the crystal in anti-phase, to cancel that fed forward by the stray capacitance. This is achieved by the stage based around TR6. R31 is used to accurately position the notch to give an overall symmetrical filter shape.

The signal then passes through the 2nd crystal filter stage.

Inter-stage amplifier

Between the 2nd and 3rd crystal filter stages is the interstage amplifier, based around TR10.

The gain of this amplifier is set by the bandwidth selection lines. The gain required from this amplifier is related to the selected bandwidth, due to the different levels of attenuation produced by the shunt resistors switched across the crystal filter tank circuits. Appropriate emitter shunt resistors are switched in or out of circuit by the bandwidth control lines.

The signal then passes through the third and fourth crystal filter stages to the output buffer based around TR15, through the D13 diode gate, the D18, D19 diode limiter and the TR18 bandpass filter to the log amp.

Output Buffer to Demodulators and SSB Board

The TR20 emitter follower stage provides an attenuated and buffered version of the final IF for routeing to the B1/2 demodulators and the SSB board (if fitted). When connected to their relevant loads, the signal levels on PLB and PLE are 10 dB less than that on TP8.

10.7 MHz IF amplifier and Log. Amplifier

The gain of the amplifier is arranged to follow a logarithmic law, which produces an output which is logarithmically proportional to the input level.

This DC output provides the signal level information required for the spectrum analyzer.

The logarithmic amplifier IC4, is a complete monolithic device, using a 9 stage successive detection technique. Input signals from TR18 are applied to pin 16, and the detected output appears at pin 6. A DC amplifier, formed by IC5a, processes this output.

The gain of the DC amplifier is controlled by R122, and R119 adjusts the amplifier offset. These enable the output to be optimised to match the display. IC5b inverts the signal to the polarity required for the display. The output at pin 7 is routed, through PLC, to board B2/1.

Power Supply Filtering.

The +12V and -12V supplies for boards A8/1, A9/1 and A10 are provided from this board through PLF. Additional filtering is provided to these supplies by L28, C155, and L29, C156 respectively.

Selecting and Routeing

The routeing of signals through the filters, and the bandwidths of the switchable filters is controlled by the state of the four logic lines from the microprocessor board B2/1. These lines enter this board, A4/1, on PLD, pins 5, 6, 7 and 8.

The logic states of each line for all filtering options is shown in the bandwidth selection table on sheet 1 of the A4/1 circuit diagram.

A15 Single sideband demodulator board (optional) (44830/021)

Overview

This board is only fitted when the SSB demodulation option is supplied. It produces a demodulated output from an SSB RF signal.

Board replacement

Replacing this board with a substitute board will not affect the calibration of the Service Monitor. However, removing the lid of the RF tray to gain access to it might affect some points.

Connections

The connections to this board are:-

PLA		Multi-pin Connector providing. Also provides the 10 MHz master clock signal from the microprocessor board B2/1. Takes the demodulated AF output signal to the audio processor board B1/2.
PLA	Pin 1	10.7 MHz IF signal from 10.7 MHz IF amplifier and log amplifier board A4/1
	Pins 2 and 3	Board ground.
	Pin 4	10 MHz master clock signal from the microprocessor board B2/1.
	Pin 6	Board ground.
	Pin 7	Demodulated AF output signal to the audio processor board B1/2.
PLB	Pin 1	+12 V rail.
	Pin 2	Board ground.
	Pin 3	-12 V rail.

Power rails

The power rails onto this board are:-

Power rail	Entry point
-12 V	PLB pin 3
+12 V	PLB pin 1

A +5 V supply is produced from the +12 V rail on the board.

Detailed description

The final IF signal from the IF amplifier is routed to this board at pin 1 of PLA.

When SSB demodulation is selected by the user, the frequency of the 1st local oscillator is set to produce a final IF of 10.625 MHz, instead of 10.7 MHz.

With the Service Monitor input attenuators set to the correct range, the signal entering the board will have a level of between -50 and 0 dBm. This has be to levelled before demodulation.

The circuit configured around TR1 is a variable gain amplifier, with the input applied to the first gate and controlled by the voltage applied to the 2nd gate. The automatic gain control circuit which produces this control voltage is described later.

The output from TR1 is fed to the 'A' input of the mixer, IC1. A 10 MHz clock signal is fed into the mixer through the internal oscillator base. The output signal from the mixer contains a component centred around 625 kHz. This is filtered off by the low-pass circuit C7/L1/C8.

The filtered signal is then fed to the 'A' input of the second mixer, IC2, where it is mixed with a 625 kHz reference signal. The reference signal is obtained by dividing the 10 MHz clock signal by 16, using IC3a.

The mixing action will produce zero output when no sideband signal is present, but will produce a signal when a frequency other than 625 kHz is present. This will be a true representation of the SSB modulation.

The output from IC2 is passed through a low-pass filter L2/C27, which removes the HF components, leaving only the demodulated SSB signal. This is fed through DC blocking capacitor C18 to PLA, then routed to the audio processor board B1/2.

The demodulated SSB signal is used to generate the automatic gain control voltage for TR1. After passing through DC blocking capacitor C19, the signal is rectified by IC4, D1 and D2. The long time-constant filtering of R16 and C21 acting with D1 and D2, together with the design of IC4a feedback circuit, produce a fast attack, slow decay, control voltage.

IC4b is used to invert the polarity of the control voltage and to allow a threshold level to be set. The action of the automatic gain control will produce a signal level out of TR1 which is virtually flat over the design input range.

The +5 V supply for this board is taken from the +12 V supply on PLB pin 1 through voltage stabiliser IC5.

AUDIO PROCESSING

B1/2 Audio processor (44830/180)

Overview

Because of the complexity of this board, the descriptions do not conform strictly to the sheet 1, sheet 2, left to right flow. Each main section shows the sheet numbers of the appropriate circuit diagram or diagrams. Sheet 1 shows the connections to and from the board, with details of the power supply rails to it. The filtering to the rails is shown, as are the supplies derived on the board.

The audio processor board :-

- Generates the AF output and modulation signals.
- Provides modulation drive from internal and external sources, including microphone amplifier.
- Provides AF output drive, to AF OUT socket and to loudspeaker.
- Produces RF level control signals.
- Fast response RF output suppression.
- Demodulates the IF signal. analysers mode and Look and Listen mode.
- IF detection for signal capture acknowledgement.
- Voltmeter, analyzer and oscilloscope ranging.
- AF filtering.
- Distortion measuring filtering.
- RF counter (through IF counter and microprocessor)

Board replacement

If this board is replaced by a substitute board, the Service Monitor will require recalibration.

Connections

The connections to this board are:-

PLA	Multi-pin connector providing the 8-bit data bus and other control signals from microprocessor board B2/1.
PLB	Multi-pin connector supplying the power rails to the board; takes measurement ranging signals (analogue) to the microprocessor board B2/1; takes a Look and Listen sweep control signal to the 2nd and 3rd local oscillator board A9/1, through B2/1. takes a 25 kHz clock signal to the input switching and broad band power meter board A11/1 through B2/1; takes the squelch level control signal from the squelch control on the front panel to B2/1.
PLC	Multi-pin connector taking the AF output through a screened cable to the AF GEN OUT socket on the front panel of the Service Monitor.
PLD	Multi-pin connector taking the FM variable drive signal to C2 via C6 , the FM 1 bit drive signal to C1 via C6 , and the AM and RF level signal to A6/1.
PLE	Multi-pin connector. Provides the RF level signal from the input switching and broad band power meter board A11/1. Takes the Look and Listen sweep signal to 90 MHz sweep oscillator board A10.
PLF	Multi-pin connector providing the 10.7 MHz IF signal from the 10 .7 MHz IF amplifier board A4/1 to the demodulator.
PLG	Multi-pin connector providing the 10.7 MHz Listen channel IF signal from the 3rd mixer A9/1.
PLH	Multi-pin connector providing DC control levels from the variable front panel controls, (volume, oscilloscope vertical position, and squelch). Also takes a +5 V supply to the variable controls).
PLJ	Multi-pin connector taking AF signals and logic to and from the ACCESSORY socket on the front panel of the Service Monitor.
PLK	Multi-pin connector taking the AF drive signal to the loudspeaker and the demodulated signal to the DEMOD OUT socket on the rear panel. Also provides the external modulation signal from the EXT MOD IN socket on the rear panel.
PLL	Multi-pin connector for the AF signal path to and from the optional AF filter board. Also provides +12 V supply to the optional AF filter board.
PLM	Multi-pin connector taking the AF signal to the optional notch filter, the filtered return signal and the notch filter option-fitted line.
PLN	Plug providing the signal from the AF INPUT socket on the front panel through a screened lead.
PLP	Multi-pin connector taking control signals and 12 V supply to optional 600 Ω interface.
PLR	Multi-pin connector providing the modulation signal from the cellular options board B3/1, and also the option fitted line from it.
PLS	Multi-pin connector providing AF signal from the cellular options board B3/1.
PLT	Multi-pin connector taking demodulated signals to the cellular options board B3/1.
PLU	Multi-pin connector providing the demodulated signal from the optional SSB board A15.

Power rails

The power rails onto this board are:-

Power rail	Entry point	Nominal current	Remarks
-12 V	PLB pins 14 and 15	170 mA	320 mA with max. AF loading
+5 V	PLB Pins 16, 17 and 18	30 mA	90 mA with max. loudspeaker drive
+12 V	PLB pins 19 and 20.	230 mA	380 mA with max. AF loading

Detailed description

Control circuit

Circuit diagram sheet 2 and 6.

The Control Circuit processes data from the microprocessor via PLA to set control registers and latches which determine the audio processor function and mode of operation.

The microprocessor provides a dedicated (and therefore quiet) 8-bit data bus which sends both data and address information to the Audio Processor. Data is also sent back to the microprocessor over this 8-bit bus. The transmission of data is controlled by the microprocessor using 4 lines: Buffered Read BUF RD(L), Buffered Write BUF WR(L), Data Select DATA SEL(L) and Address Select ADDR SEL(L).

Control latches

Data from the microprocessor is clocked into all latches, DACs, synthesiser and counter chips on the lagging (positive going) edge of the active low, Buffered Write pulse.

With ADDR SEL(L) active low, data is loaded from the 8-bit bus into address latch IC50. Three least significant bits of the latched address, A0, A1 and A2 are routed to address ports of synthesiser chips IC1 and IC2, and counter chip IC301. Latched address bits A6 and A7 select one of address decoders IC52, IC53 and IC251, and latched address bits A3, A4 and A5 define the output from the selected address decoder. Addresses 00 to B8(Hex) are used for this purpose.

With DATA SEL(L) active low, IC52, IC53 or IC251 outputs a low to the selected location. This activates the Enable or Chip Select port of the selected device. IC52 and IC53 decode addresses for the Synthesiser section, enabling data to be loaded into latches IC55 to IC58. IC251 decodes addresses for the Analyzer section, enabling data to be loaded into latches IC252 to IC257; IC258 further decodes 2 sets of 2 lines into 2 mutually exclusive sets of 4 lines.

When BUF RD(L) is active low, the output state of the IF Counter or Option Buffer is read onto the 8-bit data bus.

AF synthesiser and modulator drive

Circuit diagram sheets 3 and 4.

The circuit consists of two independent frequency synthesisers which provide the source for the AF GEN OUT socket on the front panel, and the internal modulation waveforms.

The modulation control section provides drive for AM and FM (with or without pre-emphasis).

See Fig. 1-16 *Block diagram of audio generators* below.

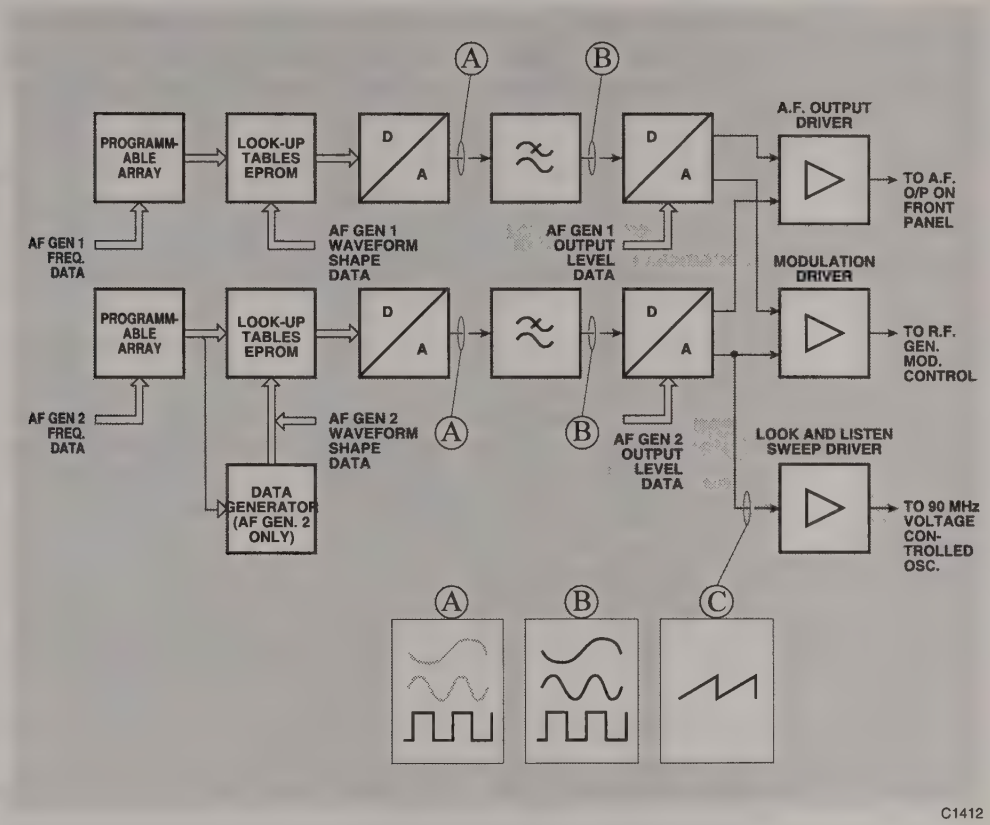

Fig. 1-16 Block diagram of audio generators

AF synthesisers

AF GEN1 and AF GEN2 are two independent frequency synthesisers consisting of audio oscillator gate array IC1 (IC2), EPROM IC3 (IC4), and DAC IC5 (IC6).

IC1 is a gate array customised as a 24 Bit direct digital synthesiser controller. Its function is determined by 8 registers, organised as 2 control registers and 2 banks of 3-byte frequency registers. Contents are loaded from the 8-bit data bus D0/D7, to the register addressed by 3-bit bus A0/A3 when CS1(L) is active low.

The chip is clocked by 1 MHz CLOCK from the reference frequency divider. The positive edge of each clock pulse causes the 24-bit word stored in a frequency register to be added to the accumulator. The accumulator output P0/P23 is therefore a 24-bit word which increases towards full scale on each successive clock pulse. The higher the number stored in the frequency register, the shorter the time to full-scale, and hence the higher the output frequency.

The 13 most significant bits P11/P23, are fed to addresses A0/A12 of 16-bit EPROM IC3. This is a look-up table which converts the address to an 8-bit output word corresponding to waveform amplitude points. The addresses from IC1, corresponding to points from zero to full scale, converts to one cycle of output waveform. Addresses A13/A15 access look-up tables for conversion to square-wave, sine-wave, and VOR/ILS (Avionics) waveforms.

The 8-bit output of EPROM IC3 is converted, in multiplying DAC IC5, to an analogue voltage, offset negatively with respect to ground. Amplitude is determined by the voltage on VREF (TP1), which is preset to 5.86 V nominal, by R2 [SET AF LEVEL] .

IC12b is configured as an adder, which inverts and shifts the output voltage positively by 2.93 V, thereby centring the output waveform about 0 V. This allows DC coupling of the output, essential for low frequency sweep and square waveforms. The DAC output amplitude, measured at TP2, is 2.064 V RMS nominal for a sine-wave, and 5.835 V pk to pk for a square wave.

AF GEN2 is essentially similar to AF GEN1, but includes Look and Listen sweep wave forms and Digitally Coded Squelch signalling tones.

When Digitally Coded Squelch is selected, the output is a coded square wave under microprocessor control. Each complete cycle of the generator chip IC2, clocks in data for EPROM addresses A12 and A13 from D-type flip-flop IC7. At the same time, an interrupt is sent to the microprocessor, asking for DCS data prior to the next clock pulse. Analogue output is either zero, FS positive, or FS negative volts. TP3 output levels are nominally the same as TP2.

FFSK (Fast Frequency Shift Keying) is not implemented in this instrument. However, the board does contain hardware for possible future implementation, therefore the operation of the feature is described.

The mark and space frequencies of the FFSK signal are held in two frequency registers within EPROM IC3. The active register is determined by the state of line SEL A/B.

To switch the signal condition, a sync interrupt is sent to the microprocessor when the output signal goes through zero phase. This is obtained from D7 of IC3, as D7 toggles. It is routed through PLA, pin 8, to the microprocessor board B2/1. The frequency of the next half cycle is determined by SEL A/B which selects the appropriate frequency register in IC1.

Filtering

The analogue output from AFGEN1 is filtered by the active filter built around IC12a. This filters out the clock frequency, and smoothes the higher frequency steps which make up the AF waveform. It is a 50 kHz low pass, 3rd order design, and has a response flat to within 0.05 dB up to 20 kHz.

The output from AF GEN2 can be similarly filtered by the 50 kHz active LP filter built around IC11c.

Switching allows alternative routeing of the AF GEN2 output signal. Low frequency square and sweep waveforms can bypass the filters and DCS signals can be filtered by a 2nd order, active LP filter, IC11b. This has a 140 Hz , 3 dB cut-off. Selection is by analogue switches IC18a, IC18b and IC18c. Any losses due to these switches are matched by R19 in the AF GEN1 circuit.

The filtered level of sinewaves, measured at TP4 and TP6 is 2.05 V RMS.

Audio output

The output from each synthesiser is fed to the V REF input of 12-bit ,level DAC IC15 or IC16. The outputs from these are buffered by IC17c and IC17d.

Selector switches IC13a to IC13d determine the gain of the AF driver amplifier and switches one or both AF generator outputs to be summed by IC19 for output from the front panel; Levels at TP7 and TP8 are dependant on DAC settings and will be between 0.5m V (loaded data 001 HEX) and 2.00 V RMS (loaded data FA0 HEX).

The AF driver stage has a gain of ×0.2 or ×2.0 determined by IC13 selector, giving full scale outputs of 4 V RMS and 400 m V RMS. This is fed through PLC/2 to the AF GEN OUT socket on the front panel.

The output from level DAC IC16 is also buffered by IC17a to feed the sweep waveform to the 90 MHz local oscillator board A10, through switch IC214c and PLE.

Internal modulation

Circuit diagram sheet 4.

The AF generators also provide the internal modulation source. The output from DAC's IC15 and/or IC16 is selected by switches IC22d and IC24a.

IC23c is used as a summing amplifier for the selected AF generator signals and any external modulation. The external modulation (see below) is fed to this through analogue switch IC24b.

The summing amplifier gain is switched by IC29a, between ×2 for AM modulation and ×0.354 for FM modulation.

External modulation

The external modulation signal may be derived from:-

- The EXT MOD socket on the rear panel (*). This is routed through PLK/1, protected buffer IC21a and selector switch IC22a.
- The Mod Options I/P from optional boards such as the SYSTEMS board(*). This is routed through PLR/2 and selector switch IC22b
- The microphone contact of the ACCESSORY socket on the front panel through IC22c.

(*) These inputs require 1 V RMS nominally, to give the required modulation as set by the Ext Mod Level DAC IC20. IC21b provides buffering and gain of ´2.05 .

Modulation level

When in AM mode, the full scale output from IC23c is 4 V RMS. This is routed through the modulation correction DAC IC25 which is nominally set to 3258(dec). This gives a nominal output of 4.5 V pk. at PLD/7, corresponding to 100% AM. The actual level will depend on the AM calibration of the complete instrument.

When providing the frequency modulation signal for the RF generator, full scale output from IC23c is 0.707 V RMS. The output from PLD pin 4 to the RF generator board A14 feeds the fractional-N, 1-bit analogue to digital converter. It is restricted to 1 V pk maximum and normally 0.5 V RMS minimum.

With no pre-emphasis IC24c and IC29b are closed, IC24d is open. To compensate for variation of FM sensitivity with carrier frequency in the RF generator oscillator, the output from IC23c is attenuated in the modulation correction DAC IC25 .

The FM attenuator DAC IC28 reduces the varactor drive by factors of 1,2,4 or 8,. This, in conjunction with the FM attenuator on the RF generator local oscillator board A13/1, gives nominal full scale deviation ranges of 100 kHz down to 195 Hz.

Actual levels depend on FM calibration of the complete instrument.

750 µs pre-emphasis

The FM pre-emphasis circuit is designed to increase deviation in proportion to modulating frequency, above a knee frequency of 212 Hz. Additionally, the deviation at 1 kHz must be the same with or without pre-emphasis.

IC23a is an inverting amplifier with a DC gain of -15.6 dB and a 1 kHz gain of -2.0 dB. It has a time constant of 750 µs given by C88 and R52. Gain in the voice band increases by approximately 6 dB/octave.

IC23b buffers the previous stage from capacitive loading of C88.

IC23d is configured as a 2nd order inverting low pass filter with DC gain of +2.0 dB and cut-off frequency of 10 kHz. IC23a and IC23d combine to give the desired pre-emphasis characteristic over the voice band 300 Hz to 3400 Hz, with unwanted high frequency components attenuated.

With pre-emphasis selected IC24c is open and IC24d closed. IC29b is open, reducing the level at PLD/4 by a factor of 4, due to the combination of R58, R59 and loading by the C1 unit.

RF level DAC

IC27 is a 12-bit multiplying DAC which sets the RF level, DC controlling voltage. This is derived from reference zener D4.

Pre-set resistor R61 [SET RF LEVEL], presets the DC level at TP14 to nominal -4.5 V via inverting summing amplifier IC26c. The actual level depends on RF Level calibration of the complete instrument.

With AM selected by IC29d, the output of modulation correction DAC IC25, is inverted by IC21d. It is then AC coupled to the input of summing amplifier IC26c to be summed with the preset DC voltage.

The maximum AC level at PLD pin 7 is 9.0 V pk-pk, which corresponds to a notional 100% AM depth.

RF output suppression

The circuit provides a fast response means of suppressing and enabling the RF output signal. This facility is used by some of the SYSTEM test options, notably EDACS repeater.

The DC level at PLD/7 can be switched negative, thereby maximising the PIN diode attenuation of A6/1 output amplifier.

The RF output control signal from the Cellular Systems board A3/1, is fed to PLR/4. When this control line is High, TR90 and TR91 are both biased off and zero current is summed into IC26c. Consequently PLD/7 voltage level, and therefore the RF output level, are unaffected.

When the RF output control signal line is Low, TR90 and TR91 are both biased on. A negative current is summed into IC26c, forcing TP14 to approximately +1 V, and PLD/7 negative.

TR91 performs as an integrator, the collector switching rate of approximately 25 V/µs being determined by R96 and C85. This results in an RF output level transition time of approximately 100 µs.

Demodulators

Circuit diagram sheet 5.

The Service Monitor produces the 10.7 MHz final IF signal from two sources, depending on the mode of operation.

The demodulator input circuit is set to select either the normal IF, or if the Service Monitor is in the Look and Listen mode, the Listen IF. Two outputs are produced, an AF demodulated signal and an IF signal at CMOS level to drive the IF counter. Demodulation can be selected from AM, FM, or FM with 750 µs de-emphasis. A 50 kHz low-pass filter is always in the demodulated output path.

IF Attenuators and switches

A separate PIN diode attenuator and selector switch is included for each IF input.

The normal IF enters at PLF, with pin diodes D100, D101 and D102 forming the input attenuator. Input selection is made by taking SEL NORMAL (L) low, which causes D106, D107 and D108 to conduct.

The Listen IF enters at PLG, with pin diodes D103, D104 and D105 forming the input attenuator. Input selection is made by taking SEL LOOK & LISTEN (L) low, which causes D109, D110 and D111 to conduct.

The circuit has a common output at a fixed low level, being the selected IF levelled by the PIN attenuators and controlled by the AGC loop.

Input impedance is 95 Ω, designed to minimise loss due to loading the IF drive circuits in the RF tray.

Both attenuators are driven by a common control voltage from the AGC circuit. This can be monitored at TP127. AGC operates over an input range -60 dBm to 0 dBm, with the control voltage within +10 V and -2 V.

The IF selector switches are driven by complementary logic level control lines, so that only one IF input is selected at a time. The outputs of both switches are wired together and taken to the input of video amplifier, IC100.

AM demodulator and automatic gain control (AGC)

IC100 amplifies the selected and levelled IF signal. The two antiphase outputs of this amplifier are filtered by 10.7 MHz ceramic bandpass filters to reduce noise, before being used to drive the AM demodulator IC101, and the single ended input to the IF limiter IC102.

AM demodulation is achieved by mixing the modulated IF signal with level limited IF from the limiter in IC102.

The output of IC101 consists of three components:- an AF component which is the required demodulated signal; a DC component which is proportional to the carrier level; and an RF component at the carrier frequency, and its harmonics.

The differential output from IC101 is filtered to remove the RF component, and converted to a single ended signal by IC103b.

The AF component is fed to selector switch IC109a as demodulated AM.

The DC component is compared with the AGC reference voltage. This is pre-set by R143, [SET AM LEVEL], and is typically -0.5 V at TP122.

Thus IC103b DC output represents level error, and is zero when the AGC loop is operating. AGC action is determined by integrating this output error voltage. The integrated error, which can be monitored at TP127, is fed back as a control voltage to the PIN diode attenuators. Feedback is in the negative sense such as to maintain the attenuator output level constant. IC103a is configured as the integrator which filters out all AF and RF components.

AGC sets the RF level to a predetermined value set by R143, and consequently the amplitude of the AF component is a measure of AM modulation depth.

10.7 MHz IF conversion to logic levels

When the Service Monitor is in FM operating mode, IC103a integrates the difference between the output of IC103b and +5 V logic high, derived from the AM DEMOD SELECT line.

The output from the IF limiter IC102, is of the order of 150 mV pk-pk. This is converted to CMOS levels by IC104b, for both IF counting and FM demodulation. This CMOS inverter is self biased by 100% negative feedback at DC, so that its input sits at its switching threshold. In consequence, relatively small (50m V pk-pk) voltage swings at the input are sufficient to permit the output to drive the following inverter buffers, IC104c and IC104d, at CMOS levels. This 10.7 MHz, CMOS level IF is used for the following:-

The IF Counter drive.

The sampling point for the IF detection circuit.

The source for the FM demodulator.

FM demodulation

The FM demodulator works on the pulse counting principal of generating fixed length pulses on each cycle of the IF. As the frequency increases, so the pulses become closer together and the average output voltage rises. Conversely, as the frequency decreases the pulses become further apart and the average output voltage falls.

The required demodulated output voltage is quite small (a few mV per kHz deviation) compared with the 700 kHz/1.4 MHz component.

Exclusive-OR gate IC105 mixes the 10.7 MHz CMOS IF with the 10 MHz reference and buffers the output to give a 700 kHz IF after low-pass filtering. The 700 kHz signal is converted to CMOS levels by Schmitt invertor IC106a with DC biased input. This feeds dual monostable IC107, which is configured to produce fixed length pulses on both positive and negative going edges of the 700 kHz input. Typical pulse length is 550 ns determined by the time constant of R169, with the effective capacitance of C167 in series with C367, and of R170 with the effective capacitance of C168 in series with C368.

IC106 buffer provides an effective 220 W source for the demodulated signal which is AC coupled into a 5th order Butterworth 163 kHz LP Filter. This gives the required rejection of 700 kHz and 1.4 MHz components. IC108a is a non-inverting stage with gain preset by R181 [SET FM LEVEL]. The demodulator has a flat response from 10 Hz, (as determined by C169/R175), to 50 kHz (as determined by the 163 kHz LP characteristic).

De-emphasis is provided by IC108b. R183 and C182 provide the 750 ms time constant for a simple low pass filter. The de-emphasis is designed to be used with a corresponding pre-emphasis, and has unity gain at 1 kHz.

In AM mode of operation the monostable IC107 is disabled, to prevent interference with the AM demodulator.

IF detection

As explained above, the FM demodulator IC107, produces one fixed length pulse for each cycle of the IF signal fed to it.

If the circuit was allowed to operate with no IF signal present, IC107 would be triggered by noise and therefore produce a random sequence of output pulses. Consequently, mean DC level would fall and coupling capacitor C169 discharge. When the IF signal was restored, C169 would charge to its operating state of 4.4 V (approximately). The settling time would be unacceptable in Cellular Radio measurements when tones need decoding within milliseconds of the carrier signal appearing. A fast response time is required, and this is achieved by reducing the time constant of coupling capacitor C169 to 200 ns whenever IF is absent, and returning to the long time constant after the presence of an IF signal has been detected. The IF detection circuit determines C169 time constant by switching R179 in or out.

The IF detection circuit consists of a low pass filter and driver for switch IC110. With random noise input, the low frequency components are passed through the LP filter and are amplified by saturating TR150. The collector waveform is negative peak detected by D150 and C156, to give an output of approximately 0.4V. This holds IC106f input low, and therefore closes switch IC110a. When a 10.7 MHz IF signal is present, it is rejected by the filter. There is no low frequency noise present, therefore TR150 is held in an off state. Capacitor C156 charges to +5V with time constant of 4.7 ms, which gives a small delay before IC106f input goes high. Switch IC110a then opens and C169 returns to long time constant.

Output switching and 50 kHz low pass filter

The 50 kHz low pass filter, comprising of IC108c, IC108d and the associated components, is always present in the demodulated signal path. CMOS switches IC109a, IC109b and IC109d select which demodulated signal is fed to it.

IC109a selects the output from the AM detector; IC109b selects the output from the FM demodulator before de-emphasis filtering; IC109d selects the output from the FM demodulator after de-emphasis filtering.

Switch IC109 is protected from voltages greater than its ±5 V supply voltage by R184, R185, R186, D180, D181 and D182.

The 50 kHz filter has a characteristic which approximates a 3rd order Butterworth low pass, with a notch at 170 kHz in the stop band. This notch is to prevent aliasing in the switched capacitor AF filter which follows the demodulator.

Non-inverting amplifier IC108d provides a gain of ×5.5.

The nominal sensitivity of the demodulated signal, measured at the 50 kHz filter output TP184, is:-

AM	25 mV pk-pk per 1% modulation depth
FM	100 m V pk-pk per 1 kHz deviation

Analyzer ranging and filtering

This section consists of:

(Analyzer ranging and switching.
SINAD filter. } See Cct. Diag Sht.7

Band limit filters.
Standard frequency divider. } See Cct. Diag Sht.8

The analyzer switching circuits allow the instrument to be configured as an AF or DC voltmeter, oscilloscope, frequency meter, modulation meter, noise and distortion meter, or RF power meter. Signals can be routed through internal band limit filters, or switched to option or external filters. A wide range of input levels is catered for by range gain switching.

Signals are selected from

- The AF INPUT socket on the front panel.
- The output from the demodulator board.
- The AF signal from the RF power meter.
- The RF levels from the directional power head accessories.
- The AF output from the optional SSB demodulator board.
- The AF signal from the optional Cellular Systems board.

AF ranging

The AF input at PLN can be either AC coupled through C200 or DC coupled when RLA is activated.

IC200 is an inverting amplifier with 1 MΩ input resistance. The gain is ×0.5 or ×0.05, selected by IC210a.

Frequency compensation is provided by C201 and C206 to keep the amplifier characteristic flat to 50 kHz.

DC offset at TP200 under no signal conditions is zeroed by preset R205.

IC201 is a non-inverting amplifier stage. The gain is switch selectable between ×1.03 and ×10.3 by IC211a.

The oscilloscope sensitivity preset R210, adjusts the gain between TP200 and TP201 to $\times {}^{5}/_{6}$ or ${}^{50}/_{6}$. The DC offset at TP201 is zeroed by R211.

IC205 is a non-inverting amplifier stage similar to IC201 and is preceded by a ×0.82 resistive divide. Preset R232 zeros DC offset at TP202.

IC206a is an inverting amplifier, with the gain selected by IC211b. The gain between TP200 and the output of IC206a is set to ×0.424 or ×4.24, by preset R238, [SET V/M SENS].

Diodes D200, D201 limit the voltage swing at IC206a output, on input signal overload, to within ±5 V.

Scope Ranging

The oscilloscope can display either the input to the AF INPUT socket on the front panel, or the signal from the demodulator board. The input is selected by IC211d, IC212a or .IC211c (see below regarding 75 kHz deviation ranging).

IC202(a) and IC203 provide more switched gain amplification. IC202a is an inverting amplifier, with gain of ×2 or ×1, feeding non-inverting amplifier IC203 with gains of ×10, ×5, ×2, or ×1.

Further ranging is necessary when the FM demodulated signal is routed to the scope, to cater for 600 Hz to 75 kHz full scale deviation. IC207b is an inverting amplifier with a gain of ${}^{5}/_{6}$ or ${}^{25}/_{12}$ selected by IC212b. The ×1 gain of IC202a is reduced to ×0.4, when R214 is switched into circuit by IC211c and IC212a. This is used on the 75 kHz full scale deviation range.

The oscilloscope input signal is combined with a DC offset voltage to provide vertical shift to the display. The vertical shift voltage from the VERTICAL SHIFT control on the front panel enters the board at PLH pin 1 and is buffered by IC204a.

The input signal and the offset voltage are combined through resistors R223 and R225, which also attenuate the input signal by a factor of 3. IC204b is designed as a 2nd order Butterworth 125 kHz LP filter, with a non-inverting gain of ×3. This restores the overall gain of the combining circuit and filter to unity.

The vertical shift voltage at PLH/1 has a range of 0 V to +5 V. After passing through the combining circuit, this causes the SCOPE RANGING O/P line at TP210, to be offset by between -2.5 V and +7.5 V. This is sufficient to allow a signal occupying the full display area (5 V pk-pk) to be shifted completely off the top or bottom of the scope display.

Voltmeter ranging

The input to these is selected by the appropriate switch as in the following tables:-

Table 1-10 Voltmeter ranging circuit selection

AF IN	IC210(b)
PWR HD CH1	IC210(c)
PWR HD CH2	IC210(d)
AF IN (Cellular)	IC214(b)
AF IN (SSB)	IC214(d)
Demod, Wideband	IC212(d)
Demod, Filtered	IC109(c)

IC202b is a non-inverting amplifier with switchable AC gains of ×1.84 or ×22.1, feeding non-inverting amplifier IC229 with switchable gains ×10, ×5, ×2.5, or ×1.

Full scale on all AF and demodulator ranges gives a signal level of $^{250}/_{256}$ ×5 V RMS = 4.882 V RMS at TP211. This is fed to the VM RANGING O/P PLB pin 2, either directly ,or through the internal SINAD filter, or through the optional notch filter. Signals at TP211 which are routed to PEAK RANGING O/P PLB pin 4 are not routed through the SINAD filter. Routing is performed by the four sections of IC217.

SINAD filter

The SINAD filter is a steep-sided notch filter which allows the `Signal to Noise And Distortion' (SINAD) ratio to be measured for a 1 kHz signal. The filter has an in-built gain of 20 dB.

Nominal characteristic:	DC gain = 20 dB	
	3 dB atten	at 800 Hz and 1.25 kHz
	60 dB atten	at 1 kHz ±5 Hz
	>70 dB atten	at 1 kHz

IC208a is configured as a 1 kHz 2nd order bandpass filter. At the centre frequency of 1 kHz, the output amplitude is twice the input amplitude, and is antiphase to the input signal. This output is now summed with the input in the ratio 1:2 due to R265 and R266, by IC208b. Signals at 1 kHz cancel, thereby creating a notch in the response. The first stage of the filter, between TP211 and TP212 has a DC gain of 6.7 dB.

The second stage, consisting of bandpass filter IC208c and summing amplifier IC208d, is virtually identical to the first stage. The DC gain is 13.3 dB due to the value of feedback resistor R277.

Preset R263 is adjusted to maximise 1st stage attenuation at 1 kHz, measured between TP211 and TP212. Preset R273 maximises 2nd stage attenuation at 1 kHz, measured overall between TP211 and TP213.

Filter block

The upper frequency cut off is set by low pass filter IC221. This is a switched capacitor filter whose cut off frequency is determined by an applied clock signal. The clock signal is generated by a voltage controlled oscillator , which is phase locked to a 5 kHz reference through a frequency divider. Microprocessor control of the divider ratio enables the upper frequency cut off to be incremented from 100 Hz to 20 kHz in 100 Hz steps. Anti-alias and clock rejection filtering is incorporated to optimise performance. The standard low pass cut off frequencies are 300 Hz, 3400 Hz, 15 kHz and 20 kHz. A 300 Hz HP filter, selected by IC218d, defines the speech band lower limit.

Filter block output can be measured at TP207.

Switched capacitor filter

IC221 is a switched capacitor Low Pass filter type TLC04 with a 4th order Butterworth characteristic, and 80 dB dynamic range. The cut off frequency is determined by the applied clock frequency, in a fixed ratio of 1:50. Passband gain is nominally unity

The +5 V regulated supply is decoupled by R297 and C241, to prevent aliasing signals from the demodulator stage being spuriously injected.

Clock generation

Clock (TP208) is generated by phase locked voltage controlled oscillator IC224. The voltage controlled oscillator output is frequency divided by factor N, and compared with a 5 kHz reference, in PHASE COMP II of IC224.

R296 and C298 form the phase comparator low pass filter which effectively integrates the correction pulses.

The voltage controlled oscillator operating range up to 100 kHz is determined by C297 and R295. Switching R315 in parallel with R295 determines the range from 120 kHz to 1 MHz.

Voltage controlled oscillator division is carried out by cascaded binary counters IC226 and IC227, operating in count-down mode. The voltage controlled oscillator output is fed to IC226 clock input. On the positive edge of each clock pulse the count decrements, eventually reaching zero on the Nth pulse, initiating the reset cycle. The MAX/MIN output of both IC226 and IC227 go high, which are decoded by IC225 to give the positive going, divider output pulse (phase comparator input). On the lagging edge of the clock pulse, IC226 ripple output goes low. This is decoded by IC225 which generates a low pulse, to load N into the counters. This terminates the reset cycle, so that the first clock pulse decrements the counter to N-1.

Data loaded into IC226 and IC227 defines the cut-off frequency of IC221 LP filter:-

Data In (HEX)		Clock Frequency	LP Filter Cut Off
IC227	IC226		
0	3	15 kHz	300 Hz
2	2	170 kHz	3400 Hz
9	4	740 kHz	14.8 kHz (nom. 15 kHz)
C	8	1000 kHz	20 kHz

Clock rejection filter

This removes clock breakthrough from the switched capacitor filter IC221.

IC209b is configured as a 2nd order LP filter with 2 selected cut off frequencies to cover 15 kHz to 1000 kHz range:-

- With IC219c and IC219d open, the 3 dB cut off = 32 kHz ; the pass band is flat to 0.1 dB up to 15 kHz; the insertion loss at 170 kHz = 30 dB, and at 750 kHz = 55 dB
- With IC219c IC219d closed, the 3 dB cut off = 1 kHz: the pass band is flat to 0.05 dB up to 300 Hz; the insertion loss at 15 kHz = 50 dB

Anti-alias filter

Signals at frequencies close to the clock frequency will alias through the switched capacitor filter. This is not a direct problem when the clock is 170 kHz or above, but with the clock at 15 kHz, in band signals are likely to alias.

IC220a is configured as a 2nd order LP filter, with 800 Hz cut-off, and is switched in by IC218c when the 300 Hz band limit filter is selected.

> The passband is flat within 0.1 dB up to 300 Hz; the insertion loss at the 15 kHz clock frequency = 50 dB

The 50 kHz anti-alias filter is selected on all other bands. The pass band is flat to within 0.1 dB up to 20 kHz; insertion loss at 170 kHz clock frequency = 21 dB; and at 750 kHz = 47 dB.

300 Hz high pass filter

This filter is selected by IC218d and is used in conjunction with the 3400 Hz low pass to facilitate speech band measurements.

IC220b is a non-inverting buffer stage with unity gain.

The circuit around IC220c and IC220d, is configured as a 4th order 300 Hz high pass filter with Chebyshev characteristic. The filter is designed to have theoretical passband ripple of 0.15 dB and an insertion loss of 0 dB at 1 kHz, so that levels measured at this reference frequency are independent of filter combination.

With 15 kHz low pass selected, both the anti-alias filter and the 300 Hz high pass filter are bypassed by IC218b. R278 is included in the bypass route to compensate for the gain of IC221 which increases with cut-off frequency.

Demodulation output

The demod output signal at PLK/3, which feeds the DEMOD OUT socket on the rear panel, is selected from:

- The 50 kHz bandwidth demodulator output direct by IC212d
- The internal filter section by IC219a.
- The option band filter by IC215d.

IC207(a) is a non-inverting amplifier with ×2 gain, IC209a buffers the demodulated signal to the DEMOD OUT socket on the rear panel.

The maximum output level is 15 V pk-pk. The nominal FM sensitivity is 200m V pk-pk per ±1 kHz deviation, and the nominal AM sensitivity is 50m V pk-pk per 1% modulation depth.

Standard frequency divider and 25 kHz generation

IC222 and IC223 are dual decade counters which divide the 10 MHz clock signal from the microprocessor board B2/1 to provide:-

- 1 MHz clock for AF synthesisers
- 50 kHz clock for the IF Counter
- 5 kHz reference for the voltage controlled oscillator phase locked loop
- 1 kHz alarm signal
- 25 kHz for the RF power meter on board A11/1.

The 30 kHz LP filter built around IC208a and IC208b, is designed to convert the 25 kHz 5 V pk-pk square wave into a 1 V RMS sinewave for use in the RF power meter. Harmonic content is not critical, typically <1%.

IC228 is configured as a 4th order LP filter with Chebyshev characteristic, with a 3 dB cut off frequency of 30 kHz. R290 and R291 provide the desired level conversion.

IF counter and audio circuits

Sheet 9.

IF counter

The circuit consists of a binary counter IC304, programmable interval timer IC301, tri-state Buffer IC302, and NOR-gate IC303.

The 10.7 MHz IF from the limiter is gated in IC304 and counted in IC301. The output count is fed to the microprocessor board B2/1, over the 8-bit data bus.

Binary counter

IC304 is used as a single divide by 2 counter, clocked from the 10.7 MHz IF limiter. This ensures the input to the interval timer IC301 is kept well within its operating limit of 8 MHz.

The counter is enabled by a 1 s, 100 ms or 10 ms, active high, gating pulse derived from IC301, and inverted by IC303b.

The counter is cleared when CLR(L) BIN CNTR from the address decoder IC53 is active low.

Programmable interval timer

IC301, type 82C54 contains 3 independent counter/timer circuits.

The mode of operation is controlled by data written from the 8-bit data bus to registers addressed by latched address when CS(L) IFCNTR and BUF WR(L) are active low.

Counter2 is operated in Mode1, 'hardware re-triggerable one-shot mode'- and, when triggered, counts a 50 kHz clock to produce a 1 s, 100 ms or 10 ms pulse used to gate IC304. Counter2 is triggered by a positive pulse when EN(L) BIN CNTR and BUF WR(L) are active low.

Counter0 and Counter1 are cascaded, and operate as binary counters in Mode2, 'rate generator mode'. Counter0 divides by FFFF (HEX) and is clocked by IC304 output, Counter1 is clocked by inverted Counter0 output and only reads correctly if it has received an overflow pulse from Counter0. For 1 Hz and 10 Hz resolution there is always an over- flow, but for 100 Hz resolution (10 ms gate) Counter1 output is ignored.

Counter output is read onto the 8-bit data bus when CS(L) IFCNTR and BUF RD(L) are active low.

IC302 is a tri-state buffer which reads the binary counter output onto D0 line of 8-bit data bus when EN(L) BIN CNTR and BUF RD(L) are active low.

Audio drive

The AUDIO signal fed to the loud speaker, is derived from the demod output signal or from the AF signal routed to the voltmeter ranging. This signal can have a maximum amplitude of 15 V pk-pk. It is attenuated by R300/R303 and the drain-source resistance of TR230, before being fed to the non-inverting input of IC231.

IC231 is an audio power amplifier capable of driving 0.25 W into an 8 Ω speaker. R306 sets the amplifier voltage gain to 32 dB, and R305/C305 series combination provides high frequency stability. IC231 has 50k Ω resistance to ground from both its inverting and non-inverting inputs.

The drain to source resistance of TR230 sets the overall gain of the audio drive stage.

Vgs of TR230 is set by PLH/3 voltage which is obtained from the setting of the VOLUME control on the front panel.

TR230 is an N-channel D-MOS FET. When this FET is OFF, Rds is > 5 MΩ and the gain is maximum. When fully ON, Rds is < 5 Ω and the gain is minimum.

When PLH/3 = 0 V, Vgs <0.8 V therefore TR230 is OFF maximising volume; When PLH/3= +5 V, Vgs >3 V therefore TR230 is ON minimising volume.

Under normal operating conditions, D300 is biased OFF, and IC230d output is low.

When the OVERLOAD line is latched high, D300 clamps Vgs of TR230 to +4.4 V irrespective of the volume control setting, hence TR230 is biased On. IC230b is enabled and generates a 2 Hz square wave which is used to gate a 1 kHz 5 V pk-pk signal in IC230d. This gated signal is attenuated by R304 and AC coupled to the IN V input of audio amplifier IC231, causing the loud speaker to emit an over-riding alarm note.

Microphone Input

The signal on microphone input pin of the front panel ACCESSORY socket, is amplified and used as the modulating signal.

The audio input is AC coupled by C77 to IC71, a combined microphone preamplifier and automatic gain controlled amplifier. R79 and C79 determine the AGC response times. The attack time is nominally 7 ms, and nominal decay time is 500 ms. IC70b is a non-inverting amplifier stage, with coupling capacitor C89 determining the LF cut-off, and feedback capacitor C97 the HF cut-off. The nominal 3 dB bandwidth is from 200 Hz to 4 kHz.

IC70b gain is set to compensate for the range in IC71 output levels. R83, [SET O/P LEVEL] is preset to make TP71= 1 V RMS for a 1 kHz microphone input level of 100m V.

Interrupt Generator

IC70a is configured as a comparator with input threshold at 1.1 V.

In NORMAL mode the TOGGLE line is high and PWR HD(H) is low. This causes the MIC IN line to be biased at 2.2 V. The comparator output is therefore negative, which biases TR70 OFF and makes TX INTERRUPT output high. TR70 emitter/base reverse bias is limited by D70.

With the headset connected to the ACCESSORY socket on the front panel and the microphone `Press to Transmit' button depressed, the comparator input is biased at 0 V. The comparator output is made positive, which turns TR70 on, and TX INTERRUPT output becomes low.

TX INTERRUPT logic low requests the Service Monitor to be configured in transmitter mode with microphone input providing the modulation.

In PWR HD mode the PWR HD line is low. the TOGGLE state is fed to the Power Head via D71, PLJ/1 and the ACCESSORY socket on the front panel

Option State Buffer

The presence or absence of available options is recognised by the logic state of IC310 inputs. These are pulled high by a section of R310, but if an option is fitted, then the appropriate line is taken low. IC310 is a tri-state buffer,. When CS(L) OPTION and BUF RD(L) are active low, the states of the lines A1 to A6 are transferred onto D1 to D6 of the 8-bit data bus. They can then be read by the microprocessor.

B4 600 Ω audio input/output interface (optional) (44829/972)

Overview

This board contains the hardware necessary to implement the 600 Ω interface option.

When this board is fitted, signals to the AF GEN OUT socket on the front panel and from the AF INPUT socket, also on the front panel, are diverted through it.

The board offers the following options:-

AF input impedance	High (1 MΩ nominal). 600 Ω balanced.
AF output impedance	Low (5 Ω nominal). 600 Ω balanced.
20 dB output attenuator	In. Out.

Board replacement

If this board is replaced by a substitute board recalibration is not necessary.

Connections

The connections to this board are:-

PLA	Pins 1 and 3	AF generator output to outer conductor of AF GEN OUT connector on front panel.
	Pin 2	AF generator output to inner conductor of AF GEN OUT connector on front panel.
PLB	Pin 5	+12 V rail.
	Pins 6 to 8.	Function select lines (TTL), from microprocessor board B2/1.
	Pin 9	Board ground.
	Pin 10	Option detect line to microprocessor board B2/1.
SKA		Co-axial connector for screened cable from AF INPUT connector on front panel.
Single pin	1	Service Monitor AF output signal from audio processor board B1/2
Single pin	2	Screen conductor connection for 1.
Single pin	3	Service Monitor AF input signal to audio processor board B1/2
Single pin	4	Screen conductor connection for 3

Power rails

The power rails onto this board are:-

Power rail	Entry point
+12 V	PLB pin 5

Detailed description

The operator sets the required operating conditions from a set-up menu, which causes the appropriate TTL control voltages to be produced on the audio processor board B1/2. These are routed to this board through PLB pins 6, 7 and 8.

The TTL control voltages are applied to the inputs of the of Darlington drivers, which in turn operate the switching relays RLA to RLE.

Any combinations of input impedance, output impedance and output attenuation can be selected.

The presence of the option in the Service Monitor is made known to the software by the detection of a chassis (0 V) connection on PLB pin 10.

600 Ω balanced input

When the 600 Ω balanced input is selected, RLA and RLB are energised, switching RLA a, RLA b and RLB b.

The signal from AF INPUT on the front panel, is applied across the primary of T1, The screened conductor, which is grounded to the Service Monitor chassis under normal operating conditions, is isolated.

The AF input to audio processor board B1/2, is obtained from the secondary of T1.

600 Ω balanced output

When the 600 Ω balanced output is selected, RLC and RLD are energised, switching RLC a, RLD a and RLD b.

The signal from AF generator output on the audio processor board B1/2, is applied across the primary of T2.

The AF output to the AF GEN OUT socket on the front panel, is obtained from the secondary of T2. The screened conductor, which is grounded to the Service Monitor chassis under normal operating conditions, is isolated.

20 dB output attenuator

When the 20 dB output attenuator is selected, RLE is energised, switching RLE a and RLE b. This connects the potential divider, R3 and R4, across the AF output from the audio processor board B1/2. The junction of R3 and R4 provides the attenuated signal output which is routed directly to the AF GEN OUT socket on the front panel or to the input of T2.

B13 CCITT filter (44830/136)

Overview

This board contains the hardware necessary to implement the CCITT filter option.

Board replacement

If this board is replaced by a substitute board recalibration is not necessary.

Connections

The connections to this board are:-

PLA	Pin 1	Board ground.
	Pin 2	Input signal from B1/2
	Pin 3	Board ground.
	Pin 4	Filtered output signal to B1/2
	Pin 5	No connection.
	Pin 6	Board ground. Used to indicate to the audio processor board B1/2, that a board is fitted in this position.
	Pin 7	+12 V rail
	Pin 8	-12 V rail

Power rails

The power rails onto this board are:-

Power rail	Entry point
+12 V	PLA pin 7
-12 V	PLA pin 8

Detailed description

When fitted, this board provides a CCITT filtering capability to the AF signal measuring path. It can be selected in the same manner as the 300 Hz low pass filter, 300 HZ to 3.4 kHz band pass filter etc. which are part of the audio processor board B1/2. The audio signal which is fed to the filter circuits on board B1/2 is switched from that board, to PLA pin 2 on this CCITT filter board. The filtered output from this board is taken from PLA pin 4, and returned to board B1/2.

B13/1 CMESS filter (44830/176)

Overview

This board contains the hardware necessary to implement the CMESS filter option.

Board replacement

If this board is replaced by a substitute board recalibration is not necessary.

Connections

The connections to this board are:-

PLA	Pin 1	Board ground.
	Pin 2	Input signal from B1/2
	Pin 3	Board ground.
	Pin 4	Filtered output signal to B1/2
	Pin 5	No connection.
	Pin 6	Board ground. Used to indicate to the audio processor board B1/2, that a board is fitted in this position.
	Pin 7	+12 V rail
	Pin 8	-12 V rail

Power rails

The power rails onto this board are:-

Power rail	Entry point
+12 V	PLA pin 7
-12 V	PLA pin 8

Detailed description

When fitted, this board provides a CMESS filtering capability to the AF signal measuring path. It can be selected in the same manner as the 300 Hz low pass filter, 300 HZ to 3.4 kHz band pass filter etc. which are part of the audio processor board B1/2. The audio signal which is fed to the filter circuits on board B1/2 is switched from that board, to PLA pin 2 on this CMESS filter board. The filtered output from this board is taken from PLA pin 4, and returned to board B1/2.

SIGNAL GENERATOR

A complete block diagram of the RF oscillator system is shown in Fig. 1-17, below.

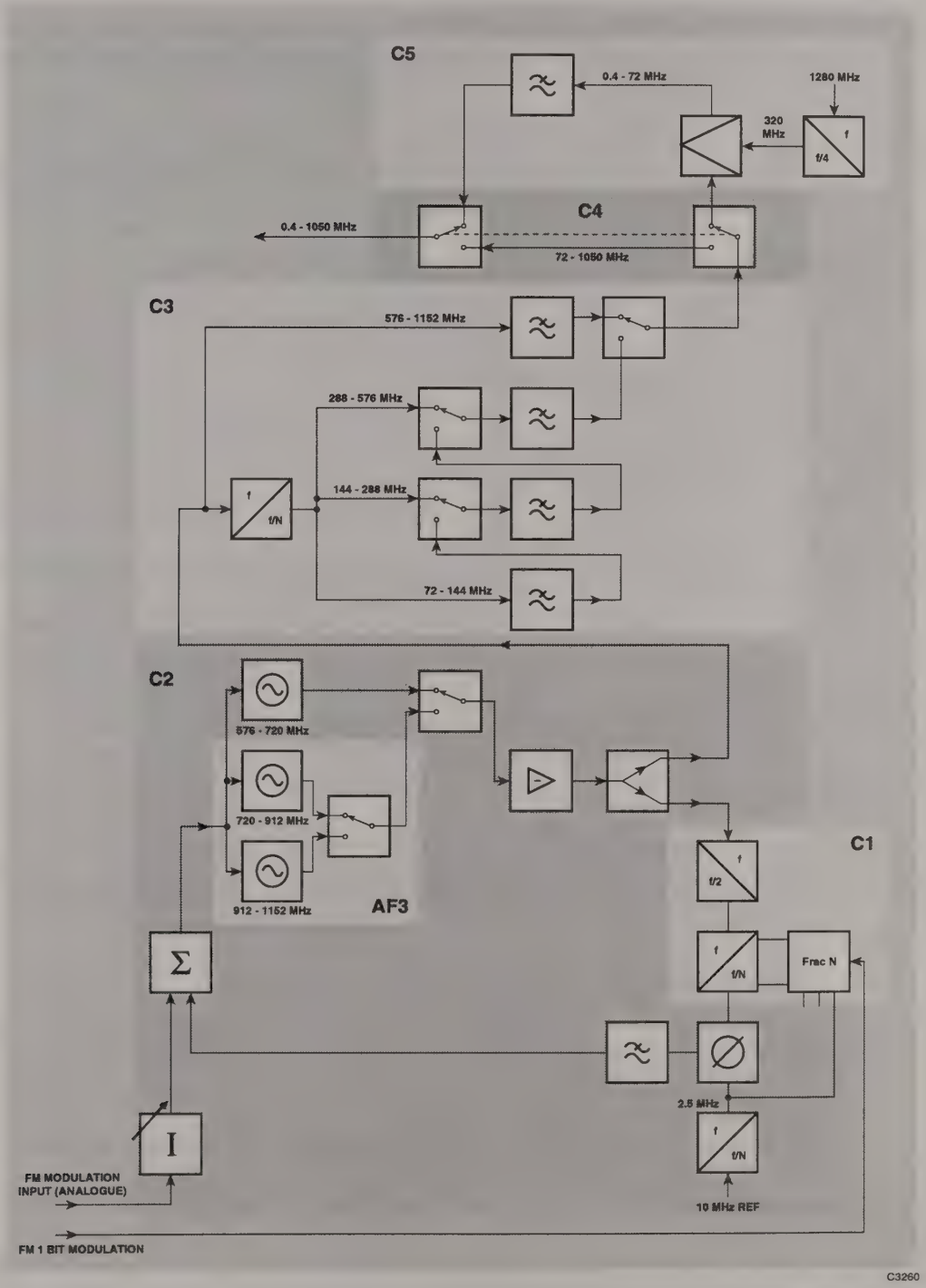

Fig. 1-17 Detailed block diagram of RF oscillator system.

C1 RF generator control (44830/113)

Overview

This board forms part of a single loop fractional N synthesizer, in conjunction with the RF oscillator board. This board contains the prescaler, programnmable divider, divider controller and DC FM modulator circuit. The oscillator board contains the phase detector, loop filter, 3 voltage-controlled oscillators and AC FM modulator circuit.

Board replacement

If this board is replaced with a substitute board the FM deviation performance will require recalibration.

Connections

The connections to this board are:-

PLA	Pin 1	Board ground.
	Pin 3	-12 V rail
	Pin 4	+5 V rail
	Pin 5	+12 V rail
	Pin 6	Board ground.
	Pin 7	Write line for data from microprocessor board B2/1 to divider controller
	Pin 8	Address latch enable line from microprocessor board B2/1 to divider controller address latch
	Pins 9 to 16	Address/data lines from microprocessor board B2/1 to divider controller
PLB		DC FM signal from audio processor board B1/2. 2 V p-p max.
PLC	Pin 1	Board ground.
	Pin 3	2.5 MHz Reference signal from C2
	Pin 4	Board ground.
	Pin 5	2.5 MHz frequency divided sample signal to C2
RF link		576 to 1152 MHz sample signal from C2

Power rails

The power rails onto this board are:-

Power rail	Entry point
-12 V	PLA pin 3
+5 V	PLA pin 4
+12 V	PLA pin 5

Detailed description

Prescaler

The output from the selected VCO on C2 is buffered by a 8 dB attenuator R1, R2, R3 and RF amplifier IC1. Frequency divider IC2 then divides the VCO frequency range by 2, to that of the programmable divider IC7. IC3 buffers and amplifies the prescaler output.

Programmable divider

The fractional N controller IC9, is controlled from the microprocessor board B2/1. IC9's register addresses are latched into IC6 and applied to the controller's address lines A0 - A5 and CS. The data for that register is then put on the data bus (D0 - D7) and the write line pulsed low.

IC10 is a low phase-noise programmable divider. The basic division ratio is controlled by inputs IM0 - IM8. The basic division ratio is the binary number appearing on these inputs plus one, all multiplied by eight.

In addition to the nine IM control inputs there are three others; IA0 - IA2. To calculate the actual division ratio, the binary number present on these IA inputs is added to the basic division ratio calculated from the number present on the IM inputs. This gives a maximum division ratio of (511+1) x 8 + 7 = 4103. The IA inputs can only be used to modify basic division ratios of 56 or greater.

The outputs from this divider are complementary ECL level signals. Both edges of the output are active (only one edge could have been used, and this would have doubled the division ratio). Using both edges of the divider output means that there are no redundant edges to interfere with operation of other parts of the circuit (in particular the phase detector, on board C2).

TR2 - TR4 convert the ECL level divider output to TTL levels. IC12a produces a short high pulse on each edge of the divider output. These pulses are used to clock the phase detector on board C2 directly, with the rising edges, and inverted by IC9c to clock the controller IC7. The controller IC is thus clocked one gate delay after the edge has been sent out to clock the phase detector, and this reduces the possibility of problems due to activity inside the controller IC dirtying the edge clocking the phase detector.

Resistors R46 to R50 are required for low phase-noise operation. The controller inputs are TTL compatible and when driven from CMOS levels, draw current when in the high state. The resistors reduce these currents to acceptable levels.

DC FM (1-bit A-D converter)

The VCO output is frequency modulated in two ways; directly through the VCO control line on the RF oscillator board (which is dominant at high modulation frequencies), and by modulating the division ratio (which is dominant for low modulation frequencies - DC FM).

The 1-bit analogue to digital converter produces a stream of bits whose average duty cycle is proportional to the voltage on the DC FM input PLB. The conversion is carried out by IC4; data is latched into the controller by TR1 and IC5a. IC11 is used to generate an accurate supply voltage for IC5 thereby rendering the DC FM path inherently accurate enough not to require calibration. The controller, when programmed to do so, uses this stream of bits to modify the programmable divider's division ratio and so vary the VCO's output frequency.

C2 RF oscillator (44830/104)

including

AF3 Voltage controlled oscillator board (44829/853)

Overview

The RF oscillator board C2, with its daughter board AF3, are used to generate a signal in the frequency range 576 to 1152 MHz. AC frequency modulation is applied to both boards.

The boards are designed to obtain high levels of signal purity and low phase noise. For this reason, the board incorporates local power supply decoupling; power rail regulation and line cleaning; on board screening; and component selection techniques.

Signals at the front panel in the range 400 kHz to 1.05 GHz are achieved by setting the output frequency of C3 and AF3 to between 576 and 1152 MHz and selecting one of these modes.

Above 576 MHz, the generated frequency is fed direct to A6/1 RF amplifier.

Between 72 and 576 MHz the generated frequency is divided by 2, 4 or 8 and fed to A6/1 RF amplifier.

Below 72 MHz the generated frequency is divided by 2 and mix down with the 320 MHz signal on C5.

Board replacement

If this board is replaced with a substitute board the FM deviation performance will require recalibration.

Connections

The connections to this board are:-

PLA	Pin 1	Board ground.
	Pin 2	+12 V rail to AF3
	Pins 3 and 4	VCO switching lines to AF3
PLB	Pin 1	Board ground.
	Pin 2	720 to 1152 MHz signal from AF3. (576 to 720 MHz signal will be present at this point when RF oscillator on this board is active).
	Pin 3	Board ground.
	Pin 4	VCO control voltage to AF3.
PLC	Pin 1	Board ground.
	Pin 3	-12 V rail
	Pin 4	+5 V rail
	Pin 5	+12 V rail
	Pin 6	+32 V rail
PLD	Pin 1	Board ground.
	Pin 2	2.5 MHz frequency divided sample signal from C1
	Pin 3	Board ground.
PLE	Pin 1	Board ground.
	Pins 2 and 3	2.5 MHz reference signal to C1.
	Pin 4	Board ground.
PLF	Pins 1, 3 and 4	VCO selector lines from C6
	Pins 5 to 7	FM modulation attenuator switching lines from C6
PLG	Pin 1	Board ground.
	Pin 2	AC FM signal from audio process B1/2
	Pin 3	Board ground.
PLH	Pin 1	Board ground.
	Pin 2	10 MHz clock signal from B2/1
	Pin 3	Board ground.
RF link		576 to 1152 MHz 8 dBm signal to C3
RF link		576 to 1152 MHz 0 dBm signal to C1

Power rails

The power rails onto this board are:-

Power rail	Entry point
-12 V	PLC pin 3
+5 V rail	PLC pin 4
+12 V	PLC pin 5
+32 V rail	PLC pin 6

Cleaned supplies of +26 V, +12 Vand –12 Vare derived from the above supplies.

Detailed description

Oscillators

The frequency range 576 MHz to 1152 MHz is covered by three VCOs. The 'low' oscillator is on C2 and the 'medium' and 'high' oscillators are on the daughter board AF3. This plugs onto board C2 and is held between the on board screens. Each VCO is in the fractional N loop control of board C1. The required VCO is selected from signals LOW (L), MED (L) and HIGH (L) which are decoded on board C6. The logic low switches -12 V through IC6 to power the oscillator and bias the relevant diode (D10 on C2) to switch RF to the junction of R48 and R49.

The three oscillator circuits are similar, each comprising a common emitter Hartley circuit with a varactor diode forming part of the capacitive coupling between the inductors. Oscillator ranges are as follows :-

LOW	576 MHz to 719.999999 MHz.
MED	720 MHz to 911.999999 MHz.
HIGH	912 MHz to 1152 MHz.

The signal from the appropriate oscillator is fed to the common base amplifier TR13 before passing to board C3 through amplifier IC7 at a level of typically +8 dBm. TR14 and IC8 amplify the oscillator signal and resistors R81, R82 and R83 match the feed to board C1 at a typical level of 0 dBm.

2.5 MHz reference frequency

The 10 MHz clock signal generated on board B2/1 is amplified in TR20 before division by 4 in IC20a and IC20b. The output of IC20b pin 9, feeds the phase detector. It is converted from a 1:1 mark/space ratio clock into a 45ns pulse through R129, C124 and IC21c. The rising edge of IC20b pin 9, and the pulse are coincident.

Phase detector

IC5(a) and IC5(b) outputs are antiphase square waves which cause TR3 and TR8 to conduct alternately. When TR3 is on, TR6 and TR7 are also on and current flows into C18. Similarly, when TR8 is switched on, TR6 and TR7 are held off, TR4 and TR5 are on, and current flows into C17. The ratio of these charges varies as the mark/space ratio of IC5(a) and IC5(b) outputs varies. TR5 and TR6 collector voltages are applied to TR10 and TR9, whose common collector voltage controls the selected VCO frequency. When the fractional-N control loop is phase locked, IC5(a) and IC5(b) outputs have an equal mark/space ratio, the charges are equal and TR9/TR10 collector voltage is such that the VCO frequency is held. If an imbalance occurs, the charges will differ and TR9/TR10 collector voltage will change, moving the VCO frequency towards lock again.

The filters in the collector circuits of TR5 and TR6 remove the fractional sidebands outside the loop bandwidth and also the reference frequency signals which would otherwise appear on the varactor drive line and modulate the oscillator.

TR11 and D8 form a voltage clamp to prevent the varactor voltage falling below +1 V and hence avoiding forward biasing of the varactor diode.

The loop filter formed by components C23, C24, R37, R38 and R39 gives a loop bandwidth of approximately 2 kHz, permitting narrow-band FM to be modulated via the fractional-N signal generator.

Frequency modulation (FM)

The FM modulation signal has to have its level modified for three reasons:-

- To set the required deviation level.
- To compensate for variations in the VCO Voltage/Frequency characteristic.
- To accommodate the changes to final output deviation caused by division ratios applied to the generated frequency.

The modulation signal is generated on the audio processor board B1/2, which also provides course adjustment steps of 0 dB, 6 dB, 12 dB or 18 dB and fine adjustment over a 6 dB range.

From B1/2 it is routed to this board (C2) at PLG. Attenuators formed by R64, R65, R66, R69, R70, and switched by IC16a to IC16d, IC17a and IC17b, provide steps of 0 dB, 18 dB, 36 dB and 54 dB. The total range of switchable attenuation on B1/2 and C2 is therefore 0 dB to 72 dB in 6 dB steps.

Frequency correction data to compensate for variations in the VCO Voltage/Frequency characteristic is stored during a software calibration procedure and applied to the signal on board B1/2. Absolute levels cannot be defined at PLG due to variations between oscillators, but the maximum signal level is 2 V pk to pk.

The selection of the FM attenuators depends on the required FM deviation setting and also on the frequency division ratio applied to the generated RF signal on RF divider board C3. The deviation produced by the RF oscillator on board C2 must be subject to the same multiplication factor as that between the generated frequency and the required final output frequency.

Consider a required signal generator frequency of 800 MHz (and hence no frequency division) and a deviation of 12.5 kHz. Table 1-12 shows that 12.5 kHz deviation is in range 6. The 6 dB variable attenuation on board B1/2 provides adjustment from 12.5 to 24.999 kHz deviation, so would be set at its 6 dB point.

Now consider a required signal generator frequency of 80 MHz and a deviation of 12.5 kHz. The RF oscillator will run at 640 MHz and be divided by 8 to produce the required RF output. It will be seen that the deviation applied to the RF oscillator will need to be 8 times the required final deviation.

The amount of attenuation in the deviation drive path can be established from the following:-

On Table 1-11, select the row containing the required *Final deviation* (24.999 to 12.500) and the column containing the required *Final RF output frequency* (72 TO 143.999 MHz).

The figure at the intersection, *3*, shows the *RF oscillator deviation range* in Table 1-12 that will be used. The variable 6 dB attenuator provides adjustment from 199.999 to 100 kHz deviation, so would be set its 6 dB point.

Also in Table 1-12, range 3 shows that board B1/2 has 12 dB of fixed attenuation switched in but that C2 has none in circuit.

Changing the signal generator frequency can result in changes to the FM attenuators and the signal level on PLG.

Reducing the required FM deviation by 25 Hz to 12.475 kHz reduces the deviation produced by the RF oscillator to 99.8 kHz. This places it in range 4 on Table 1-12, which shows that board B1/2 now has no fixed attenuation switched in circuit but that C2 has 18 dB switched in. The variable attenuator is *close to* the 0 dB point. This makes the level on PLG approach 2 V pk to pk. The level at TP9 will have reduced by the small value necessary to reduce the RF oscillator frequency deviation by 200 Hz.

Table 1-11 Set deviation ranges for differing signal generator frequencies

	Final RF output frequency (MHz)				
	0.4 to 71.999999	72 to 143.999999	144 to 287.999999	288 to 557.999999	576 to 1152
Final deviation	**C2 deviation range**				
99.999 to 50.000	3	1	2	3	4
49.999 to 25.000	4	2	3	4	5
24.999 to 12.500	5	3	4	5	6
12.499 to 6.250	6	4	5	6	7
6.249 to 3.125	7	5	6	7	8
3.124 to 1.563	8	6	7	8	9
1.562 to 0.781	9	7	8	9	10
0.780 to 0.391	10	8	9	10	11
0.194 to 0.195	11	9	10	11	12

Table 1-12 C2/AF3 Deviation ranges and FM attenuation

Range	RF oscillator deviation range (kHz)			Fixed attenuation (dB)		
				B1	C2	Total
1	799.999	to	400.000	0	0	0
2	399.999	to	200.000	6	0	6
3	199.999	to	100.000	12	0	12
4	99.999	to	50.000	0	18	18
5	49.999	to	25.000	6	18	24
6	24.999	to	12.500	12	18	30
7	12.499	to	6.250	0	36	36
8	6.249	to	3.125	6	36	42
9	3.124	to	1.563	12	36	48
10	1.562	to	0.781	0	54	54
11	0.780	to	0.391	6	54	60
12	0.390	to	0.195	12	54	66
13	0.194	to	0.098	18	54	72

IC16 and IC17 switch the modulation signal through to TP9 where it is combined with the loop control signal and applied to the VCO. Resistors R64, R65 and R66 give 18 dB and 36 dB levels which can be cascaded with the 18 dB formed by R69 and R70 to give 54 dB.

Power line cleaning

Any noise on the supply rails with frequency components greater than the loop bandwidth of the loop will induce phase noise on the oscillator output.

The +35 V power line is used by IC1 to derive the +26 V regulated supply for this board. The regulator adjust pin of IC1 is decoupled by C3 to improve ripple rejection. Diode D1 provides a discharge path for C4 on power-down.

Both +12 V and –12 V lines are lines cleaned to provide additional protection from noise and ripple. The cleaned lines $12v_c$ are used in sensitive areas of the oscillator and phase detector.

In the +12v line cleaner the non inverting input of IC2a is biased through R3, D2 and R7. IC2a drives TR1 to set up a balance current in TR1 and R9 which applies feedback to the inverting input of IC2a through R5 and the long time constant R6 and C7. Any high frequency current transients on the power line are developed across R3 and applied through zener diode D2 to the non-inverting input of IC2a. IC2a drives the base of TR1 to compensate for the transient current change in the power supply. The -12v line cleaner works on the same principal.

Three 5 V drives are isolated through R100 and R101 and local decoupling capacitors to reduce interference.

Software control

Six control bits are decoded on the inter-connection board C6 and are shown in Table 1-13.

Table 1-13 Software control C2

Function	0/54 dB	0/36 dB	0/18 dB	HIGH	MED	LOW
Select Low VCO 576 to 719.999999 MHz	×	×	×	1	1	0
Select Med VCO 720 to 911.999999 MHz	×	×	×	1	0	1
Select High VCO 912 to 1152 MHz	×	×	×	0	1	1
FM attenuation = 0 dB	0	0	0	×	×	×
FM attenuation = 18 dB	0	0	1	×	×	×
FM attenuation = 36 dB	0	1	0	×	×	×
FM attenuation = 54 dB	1	1	0	×	×	×

Note: × = Don't care , 1 = logic high, 0 = logic low

C3 RF divider (44830/105)

Overview

This board selectively filters the 576 MHz to 1152 MHz signal from the C2 board and provides frequency division, as required, under main or DSP control through the signal generator RF tray interconnection board C6. The division applied to the original signal to produce the required output frequency to the bypass board C4 is shown in the following table:-

From	To	Divided by:-
72 MHz	143.999999 MHz	8
144 MHz	287.999999 MHz	4
288 MHz	575.999999 MHz	2
576 MHz	1152.000000 MHz	1 (Fundamental)

This board is derived from a board used in other products manufactured by Marconi Instruments Ltd. The 2948 does not require the 100 MHz and 140 MHz filters of the original design. Therefore the board is produced as C3 under part number 44830/105, with the unwanted components excluded. The circuit diagram has been reproduced with a new title under the new number, with the excluded components indicated by an asterisk*.

Board replacement

If this board is replaced with a substitute board the Service Monitor will require recalibration.

Connections

The connections to this board are:-

PLA	Pin 1	Board ground
	Pin 3	-12 V rail
	Pin 4	+5 V rail
	Pin 5	+12 V rail
PLB	Pins 1, 3 and 4	Filter selection lines from board C6
	Pins 5, 6 and 7	Division ratio selection lines from board C6
RF link		576 to 1152 MHz 8 dBm signal from C2
RF link		576 to 1152 MHz –2 dBm signal to C4

Power rails

The power rails onto this board are:-

Power rail	Entry point
-12 V	PLA pin 3
+5 V	PLA pin 4
+12 V	PLA pin 5

Detailed description

Control circuits

Controls lines from board C6 enter through PLB to drive the decode logic in IC2 and the 4 to 16 line decoder IC3. These devices control the states of the control signals S1 and S0, which set the divide factor of programmable divider IC7, and the states of V1 to V12 for configuring the filter switch matrix.

The filter selection range determines which low pass filters are switched in by the various switching diodes. As the divide factor is increased, so the number of filters increases. At the top of the range, only one is used, whereas at the bottom, four are used.

Divider and filter selection codes and main controls are summarised in Tables 1-14 and 1-15 below.

Table 1-14 Software control C3

Signal generator frequency	÷2	÷4	÷8	not used	not used	FIL3	FIL2	FIL1
0.4 to 71.999999 MHz	0	1	1	×	×	0	1	1
72 to 99.999999 MHz	1	1	0	×	×	1	1	1
100 to 143.999999 MHz	1	1	0	×	×	1	1	0
144 to 199.999999 MHz	1	0	1	×	×	1	0	1
200 to 287.999999 MHz	1	0	1	×	×	1	0	0
288 to 399.999999 MHz	0	1	1	×	×	0	1	1
400 to 575.999999 MHz	0	1	1	×	×	0	1	0
576 to 799.999999 MHz	1	1	1	×	×	0	0	1
800 to 1152 MHz	1	1	1	×	×	0	0	0

Note: 0 = logic low, 1 = logic high. X= don't care

Table 1-15 Diode switching levels

Signal generator frequency	S1	S0	C3 div ratio	V1	V2	V3	V4	V5	V6	V7	V8	V9	V10	V11	V12
0.4 to 71.999999 MHz	0	0	2	H	H	L	H	L	L	H	H	H	H	H	H
72 to 99.999999 MHz	1	0	8	H	H	H	H	H	L	H	H	H	L	H	L
100 to 143.999999 MHz	1	0	8	H	H	H	H	H	L	H	H	H	L	L	H
144 to 199.999999 MHz	0	1	4	H	H	H	H	H	L	L	H	L	H	H	H
200 to 287.999999 MHz	0	1	4	H	H	H	H	H	L	L	L	H	H	H	H
288 to 399.999999 MHz	0	0	2	H	H	L	H	L	L	H	H	H	H	H	H
400 to 575.999999 MHz	0	0	2	H	H	L	L	H	L	H	H	H	H	H	H
576 to 799.999999 MHz	x	x	1	H	L	H	H	H	H	H	H	H	H	H	H
800 to 1152.000000 MHz	x	x	1	L	H	H	H	H	H	H	H	H	H	H	H

Note: 0 = logic low, 1 = logic high, X= don't care, H = +12 V, L = -12 V

RF routeing

The main purpose of routeing the RF signal through the filters, is to remove the harmonics that are present on the signal, prior to levelling on A6/1. The signal routeing is carried out by forward or reverse biasing signal diodes. The control circuit which set the division factors and produce the filter selection signals is described above.

Above 576 MHz

When the required frequency is greater than 575.999999 MHz the signal from the RF oscillator board C2, is routed through C1, C121 and R9, into IC9 which bypasses the divider IC7.

To ensure the output of the divider is quiet and does not self oscillate in the absence of an RF signal, the following takes place. V6 is held high, which applies reverse bias to diode D1 through R5, L15, L55 and R51 to ground. V6' is held at logic 1, to switch on TR1 and TR3, which shorts the input of the divider to ground and removes the bias conditions for TR2, ensuring no RF signal is present on C105 and the following filters.

The output of IC9 is routed through either the 800 MHz low pass (V1 high, V2 low) or the 1200 MHz low pass filter (V1 low, V2 high) depending on the required frequency.

To route the signal through the 800 MHz filter, V2 being low creates two low resistance paths from V2 to ground:-

Through R23, L9, L10, L12, L14, D14, D12, D10, L8 and R22

Through R23, L9, D50 D5 D2, L1 and R19.

V1 being high:-

Switches off diodes D49, D6, D53, D9, D11, D17, D16, and D15, thereby presenting high impedance signal paths.

Switches on diodes D7, D8, D51 and D52 thereby presenting low impedance signal paths

As L1, L8 and L9 present a high impedance, the RF signal will pass through the 800 MHz filter.

V6 is held at +12 V, and applies reverse bias to D13 to isolate the divider path still further.

To route the signal through the 1200 MHz filter V1 is made high and V2 is made low. This changes the biasing on all of the diodes mentioned above except D1, D2 and D13.

Below 576 MHz

When the final output frequency is to be below 576 MHz the divider IC7 is active. The division factor is controlled by state of lines S0 and S1, to pins 14 and 15 of IC7. V6 is taken low to enable the divider through D1.

When V6 is low, D10 and D13 are switched on with current through R22, L8, L28 and R32, thereby providing a signal path from the 575 MHz filter to the output of the board. V1 and V2 are held at +12 V. This switches off the 800 MHz and 1200 MHz filters.

As an example of the signal routeing for a specific frequency assume that the signal frequency is set to 80 MHz. V10 is switched to –12 V, which biases D18 on, switching the divider through C105 to the input of the 100 MHz filter. V12 is at –12 V, which draws current through R44, L40, D48, L50, L51, D41, L37, L38, D32, L35, L36, D26, L22 and R29. This routes the RF signal through the 100 MHz, 140 MHz, 280 MHz and 575 MHz filters.

The above switching techniques are repeated for the other filters.

C4 Bypass board (44830/106)

Overview

This board takes the output from the signal generator board C3 and routes it to either directly to the RF amplifier board A6/1, or to the BFO board C5. When routed to the BFO board, the signal is used to produce the 400 kHz to 71.999999 MHz frequency range, which is routed back to the this board and then to the RF amplifier board A6/1.

Board replacement

Replacing this board with a substitute board does not necessitate any recalibration of the Service Monitor. However, gaining access to the board requires removal of the RF tray lid, which can change the frequency response of some points of the Service Monitor performance.

Connections

The connections to this board are:-

PLA	Pin 1	Board ground.
	Pin 2	BFO path enable line
	Pin 4	Bypass path enable line
SKA		400 to 1050 MHz –16 dBm signal to RF amplifier A6/1
RF link		72 MHz to 1050 MHz 0 dBm signal from Divider board C3
RF link		320.4 to 392 MHz –3 dBm signal to BFO board C5

Power rails

This board has no power rail connections.

Detailed description

The bypass path

For final RF output frequencies 72 MHz and above, the signal from board C3 is passed unmodified to the RF output amplifier board A6/1. It is routed directly to the C4 board RF OUT port, attenuated from a nominal 0 dBm at C3 output to a nominal -16 dBm at SKA.

The bypass path starts with a 'T' switch, consisting of one element of diode package D2 (pins 1 and 3) and all elements of D3. This is followed by an 8 dB π attenuator pad, comprising of R8, R9 and R10. An 'L' switch, formed around D4 and the associated components, controls the output from the bypass path.

The path is selected by a +12 V DC level on the BYPASS line, PLA pin 4. This biases the series elements of D2 (through resistors R4 and 5), D3 (through R5 and R7), and D4 (through R11, R12 and R14).

The path is isolated by a –12 V DC level on the BYPASS signal. This biases the shunt elements of D3 (through R5 and R6), and D4 (through R11, R12 and R13).

The total signal loss over the bypass path is made up of the 8 dB π attenuator and a further 8 dB from the diode switches.

When in the BFO path is selected, the bypass path has to provide a high isolation (around 90 dB), so as to prevent any appreciable leakage of the signal generator output onto the RF OUT port.

The BFO paths

For final RF output frequencies below 72 MHz, the signal from board C3 is routed to the BFO board C5, mixed with a 320 MHz signal, then returned to this board as a 400 kHz to 71.999999 MHz signal for routeing to the RF output amplifier board A6/1.

The BFO send path

This path is provided by a 'T' switch, consisting of one element of diode package D2 (pin1 and pin4), and all elements of diode package D1.

The path is selected by a +12 V DC level on the BFO line, PLA pin 2. This biases the D1 series element through resistors R1 and R3, and D2 series element through R3 and R4.

The path is isolated by a –12 V DC level on the BFO line. This biases the D3 shunt elements through R2 and R3.

The BFO return path

This path is provided by a 'T' switch, consisting of diodes D5, D6 and D7.

The path is selected by a +12 V DC level on the BFO line, PLA pin 2. This biases the series elements of D5 (through resistors R14 and R16), and D7 (through R16 and R17).

The path is isolated by a –12 V DC level on the BFO line. This biases the shunt element of D6 (through R15 and R16).

Note that R14 also biases D4, in the bypass path.

General notes

1. Inductors L1 and L4 prevent the DC bias networks from degrading the BFO path isolation. L2 and L3 do the same for the bypass path.

2. The BFO on PCB C5, which is used to produce the low range RF frequencies, is disabled when the Bypass board C4 is in Bypass mode.

C5 BFO board (44830/107)

Overview

This board produces the a 400 kHz to 71.999999 MHz output frequency range of the signal generator.

A 320 MHz signal derived from the 1280 MHz local oscillator, is mixed with a 320.4 MHz to 391.999999 MHz signal taken from the main RF oscillator, through the bypass board C4.

The required signal is extracted from the mixer output and returned to board C4 for routeing to RF amplifier board A6/1.

Board replacement

If this board is replaced by a substitute board, the Service Monitor will require recalibration.

Connections

The connections to this board are:-

PLA	Pin 1	Board ground.
	Pin 4	+5 V s (switched) from C6
	Pin 5	+12 V rail
SKA		1280 MHz -13 dBm signal from 2nd local oscillator board A9/1
RF link		320.4 to 392 MHz –3 dBm signal from C4
RF link		400 kHz to 72 MHz –13 dBm signal to C4

Power rails

The power rails onto this board are:-

Power rail	Entry point
+12 V	PLA pin 5

A switched 5 V supply is fed to PLA pin 4, from the RF tray interconnection PCB C6. This is enabled only when the BFO is required to be active.

Detailed description

Mixer local oscillator source

The 320 MHz local oscillator (LO) signal is produced by dividing by four, the 1280 MHz 2nd LO signal from board A9/1.

This signal enters at SKA, at a nominal level of –13 dBm. It is fed to the input of 'divide by four' device, IC3, to produce 320 MHz at –1.3 dBm (typical), –3 dBm (minimum).

The output from the divider is routed to a π attenuator R3, R4 and R5 giving 1.8 dB attenuation, followed by an amplifier, comprising IC2 and its associated components.

The signal from the RF generator board C3, routed through the bypass board C4, is fed to the RF port of double balanced mixer IC1. This signal is 320 MHz above the required final output frequency.

The mixer produces the required signal frequency, together with other mixer products, at its IF port. The required frequency is extracted from the unwanted signals by the cascaded 80 MHz and 144 MHz low-pass filters.

Suppression of unwanted mixer products

The first filter is a fifth order elliptic low pass, with an 80 MHz cut-off frequency, formed by L5 and L6 with capacitors C16 to C21)

The second filter is a third order elliptic low pass, with a 144 MHz cut-off frequency, formed around L7 with C22 to C26.

The output from the filters is returned to board C4, from where it is routed to the RF amplifier board, A6/1.

+5VS rail switching

To reduce high frequency spurii, the BFO is disabled when the bypass board C4 is in the BYPASS mode. The +5 volt supply to IC3 is a unique supply +5VS, fed from a switching transistor on the interconnecting board C6. This supply is switched of when the BFO is not required.

C6 RF tray interconnection PCB (44830/108)

Overview

The RF generator for the Service Monitor is contained on the lower tray. This board is used for several control functions for it:-

Address decoding and data distribution.

Bypass board control signals.

Power rails distribution.

Board replacement

This board is held to the RF tray with many rigid solder connections. It is not considered to be a user replaceable item.

Connections

The connections to this board are:-

PLA	Pins 3 to 10	Data lines from microprocessor board B2/1
	Pin 13	Write enable line from microprocessor board B2/1
	Pin 14	Address latch control line from microprocessor board B2/1
PLB	Pin 1	Board ground.
	Pin 3	–12 V rail
	Pin 4	+5 V rail
	Pin 5	+12 V rail
	Pin 6	+36 V rail
PLC	Pin 1	Board ground.
	Pin 3	AC FM from B1/2
	Pin 4	10 MHz clock from B2/1
PLD	Pin 1	Board ground
	Pin 2	DC FM from B1/2
	Pin 3	Board ground
Output connections		The output connections from this board are made either through filter capacitors F1 to F8, F10 to F35 or by wire connections W1 to W6 and W11. Refer to the circuit diagram for details.

Power rails

The power rails onto this board are:-

Power rail	Entry point
-12 V	PLB pin 3
+5 V	PLB pin 4
+12 V	PLB pin 5
+36 V	PLB pin 6

Detailed description

Address decoding and data distribution

The upper two bits of the data bus D6 and D7 are latched into IC1 on the rising edge of DUP AL. They are decoded in IC2 to give CS1 and CS3 which enable IC3 and IC4 respectively.

Data written on D0 to D7 is then latched into either IC3 or IC4 on the next rising edge of DUP WR. The control lines DUP AL and DUP WR are also used by board C1. The address map selected by DUP AL is shown below.

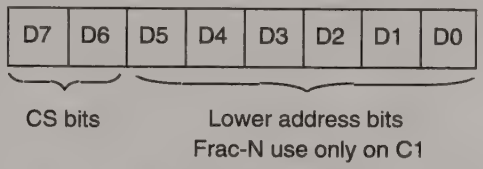

CS bits	To boards
00 = CS0 Frac-N	C1
01 = CS1 Oscillator select	C2
10 = CS2 Frac-N	C1
11 = CS3 Divider select	C3, C4 and C5

Bypass board control

The state of the BYPASS and BFO lines to bypass board C4 is controlled by the state of the BFO.L / BYPASS.H line, decoded by IC4. These control lines enable their respective paths when at +12 V and isolate them when at −12 V. These voltage swings are produced by the Pin Diode Bias circuits formed around IC5, TR1, TR2; and IC6, TR3, TR4.

The value of R7 is set so that TR1 conducts when IC5 supply current *and* load current is flowing in R5; TR2 conducts when IC5 supply current *and* load current is flowing in R6. The supply current alone in either R5 or R6 is not sufficient to cause the transistors to conduct. The direction of current flow in the BYPASS line will depend on the state of the BFO.L / BYPASS.H output from IC4.

The BFO control line controlled by IC6 operates in a similar manner to IC5 but in anti-phase.

Power rail distribution

The power rails for the RF generator tray enter this board on PLB and are distributed to other boards on the tray through filter capacitors. No filtering to the distributed rails is provided on this board.

A6/1 RF output amplifier and AM modulator (44829/925)

Overview

The RF output amplifier and AM modulator board produces the RF output signal for feeding to the output attenuators. A detailed block diagram is given in Fig. 1-18, *Detailed block diagram of A6/1*. The 100 kHz to 1050 MHz signal from the RF oscillator system is amplified by up to 50 dB. Fine attenuation control and amplitude modulation is applied on this board.

Board replacement

If this board is replaced with a substitute board, the Service Monitor will require recalibration.

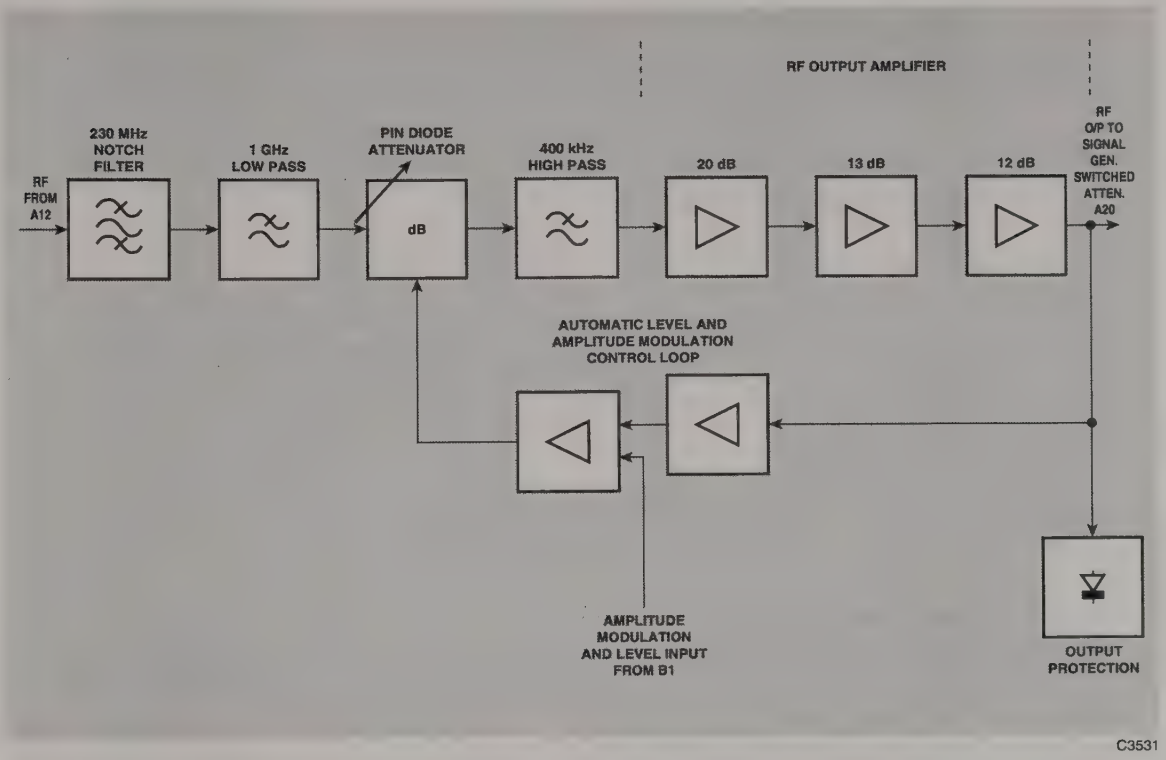

Fig. 1-18 Detailed block diagram of A6/1

Connections

The connections to this board are:-

PLA	Pin 1	Board ground.
	Pin 3	-12 V rail
	Pin4	+5 V rail
	Pin 5	+12 V rail
	Pin 6	No connection
	Pin 7	No connection
PLB		AM modulation signal and variable RF level signal from the Audio Processor board B1/2.

Power rails

The power rails onto this board are:-

Power rail	Entry point	Nominal current
-12 V	PLA pin 3	15 mA
+5 V	PLA pin 4	15 mA
+12 V	PLA pin 5	140 mA

Detailed description

RF signal path

The input signal from the RF oscillator system is fed to a 230 MHz notch filter comprising of C1, R1, C14 and L12, then to the 1 GHz low-pass filter L1, L2, L3, L4, C2 and C3. The first filter flattens the frequency response of the amplifier and the second removes signal energy above 1050 MHz.

A pin diode attenuator comprising of the four diodes D1 to D4 is used to apply all control of the signal level. The control signal is produced in the automatic level and amplitude modulation control loop. It contains three control elements; The automatic levelling voltage, the fine attenuation control voltage, and the amplitude modulation signal, if applicable. The circuits producing the control signal are explained later in this description.

The signal level at the input to the pin attenuator is in the order of -15 dBm. The maximum control voltage of 7 V at test point TP2 will result in zero attenuation, while a reduction to 0 V will cause the attenuation to increase to its maximum of 30 dB. The biasing current path for the PIN diodes is through R6 and then R2 or R3. The inductors L10 and L11 prevent RF signals from being shunted by the control voltage circuit.

From the PIN attenuator, the signal passes through a 400 kHz high-pass filter. This limits the gain of the amplifier to unity at frequencies below 250 kHz. Without this filter, the control loop feedback path could produce oscillation.

Two stages of signal amplification is provided by monolithic amplifiers IC1 and IC2. The components associated with IC1 fix the gain of this stage at 20 dB, while that of IC2 is 13 dB.

The final drive to the output attenuators is provided by IC3 which is configured to have a gain of 12 dB

The output impedance of this amplifier is reduced to approximately 1 Ω by the action of the automatic level loop, therefore 50 Ω resistor R5 is included to provide the correct impedance matching to the output attenuators.

Protection against reverse power in excess of approximately 250 mW at the junction of C26 and R5, is provided by the circuit containing diodes D5a, D5b, D6 and D7.

Level control loop and Amplitude modulation

The level control loop signal is also obtained from the junction of C26 and R5. The gain of the loop at the high frequency end of its range is boosted by the action of R16 and stray capacitance of the detector input. The RF signal is rectified by detector diode D9 to produce a DC voltage across C35, which is proportional to the output of IC3. IC5 is configured as a unity gain amplifier, with D8 in its feedback path. This diode and D9 are a matched pair, providing temperature compensation.

The combined amplitude modulation and fine level setting signal enters the board on PLB, then passes through the input resistor R21 to the non inverting input of IC4.

The level control loop signal is fed to the inverting input of IC4, which produces a composite control and modulation signal. combines this with the control loop signal with AF amplitude modulation signal and the variable level control signal.

The composite control signal from the output of IC4 passes to the PIN diodes through R6 and L19. For testing and servicing, shorting link PLC can be removed to break the control loop.

A20 3 stage output attenuator (44429/080)

Overview

Repair, adjustment or dismantling of this unit is not recommended, complete unit replacement being the advised repair procedure.

The description which follows is included to aid fault identification.

This assembly incorporates printed circuit board assembly 44829/891.

Unit replacement.

If this unit is removed from the Service Monitor, the procedure given in Chapter 2, *Access and layout* **MUST** be followed. Similarly the re-fitting procedure **MUST** be followed when fitting a unit.

If this unit is replaced by a substitute unit it is recommended that the Service Monitor is recalibrated to ensure optimum performance.

Connections

The connections to this board are:-

PLA	Pins 1, 3, 5, 7, 8 and 10.	Attenuator switching signals from B2/1. For duration of the switching pulse, +5 V is switched to the common line, pin 2, and the appropriate switching lines taken to 0 V.
	Pin 2	Common connection for latching relay operating coils.
		SMA connector for RF output to the input/output switching board A11/1.
		SMA connector for RF input from the RF amplifier board A6/1.

Power rails

No power rails are required by this unit.

Detailed description

The 3 stage switched attenuator provides stepped level control to the output from the signal generator within the Service Monitor.

It has an attenuation range of 0 dB to 100 dB in 20 dB steps, with one stage of 20 dB and two stages of 40 dB.

The RF signal from the RF amplifier board A6/1 is fed to the SMA RF input connector, to pin 11 of RLA. After passing through the selected attenuator stages, it is routed from pin 11 of RLF to the SMA RF output connection, then to the input/output switching board A11/1.

Each stage consists of a twin π network which can be included in the signal path or bypassed, according to the required value of attenuation.

The selected stages are switched in or out of circuit by latching relays, RLA to RLF, activated by a pulse of approximately 45 ms, routed from the microprocessor board B2/1. The common return for the relay coils is through L1 and PLA pin 2, to the supply produced on microprocessor board B2/1.

INTERFACES

B7 GPIB interface (optional) (44829/991)

Overview

The GPIB (General Purpose Interface Bus) option is used to allow external devices to remotely control the Service Monitor. The hardware for this option provides a 24-way connector, specifically designed to accept GPIB cables.

It is fitted to the rear of the Service Monitor next to the fan. The parallel interface option, B10, also fits to the same position, and therefore only one of these options can be fitted at any one time.

Unit replacement

If this unit is replaced by a substitute, recalibration is not necessary.

Connections

This unit is connected to the microprocessor board B2/1 through PLA. Most of the connections are listed below under Interface to B2/1 board. Connections not included in that section are listed here.

PLA	Pin 1	Locator blank
	Pins 2 and 3	No connection
	Pin 4	+5 V rail
	Pin 8	Board ground
	Pin 14	Board ground
	Pin 23	Board ground

Power rails

The power rails onto this board are:-

Power rail	Entry point
+5 V	PLA pin 4

Detailed description

Interface to B2/1 board

The interface to the main processor board B2/1, within the Service Monitor , is made via PLA on B7 which is connected to PLG on B2/1. This provides the following:

Label	PLA pin number	Description
D0 to D7	15 to 22	Bi-directional data lines
BA0 to BA2	24 to 26	Address lines
BWR(L)	12	Write line
BRD(L)	13	Read line
GPIBCS(L)	11	Chip select
GPIB FITTED(L)	10	GPIB option fitted line
CENT FITTED(L)	9	Parallel option fitted line
RESET	7	Master reset from B2/1
GPIB INT	6	Interrupt line to B2/1
5 MHz	5	Clock from B2/1

The GPIB FITTED(L) and CENT FITTED(L) lines from this board are read by the 80C188 on the microprocessor board B2/1, to determine which of the options is fitted. On B2/1, both of these lines are pulled high via resistors so that the line is high if nothing is connected to it. On this board, (B7) the GPIB FITTED(L) line is pulled to ground but the CENT FITTED(L) line is left open circuit. This indicates the presence of the B7 board.

GPIB controller

The GPIB interface functions are all performed by the GPIB controller, IC1. It provides eight read and eight write registers which are accessed by the microprocessor board B2/1, using D0 to D7, BA0 to BA2, BWR(L), BRD(L) and GPIBCS(L).

The controller is reset on power up using the master reset line (PLA pin 7) from the microprocessor board. This line is high for approximately 300 ms, immediately after power up.

The controller requires a clock input in the range 1 MHz to 8 MHz and this is provided by the 5 MHz line from the microprocessor board.

Interface to GPIB

The interface between the GPIB option and the external controlling device is made through the 24-way GPIB connector, SKA. This provides the following:

Label	SKA pin number	Description
D0 to D7	1 to 4, 13 to 16	Bi-directional data lines
ATN(L)	11	Attention control line
EOI(L)	5	End of identify
SRQ(L)	10	Service request
REN(L)	17	Remote enable
IFC(L)	9	Interface clear
DAV(L)	6	Data valid
NDAC(L)	8	Data accepted
NRFD(L)	7	Ready for data

Data is transferred between the interface and the external controlling device using the data lines D0 to D7 and the handshaking lines DAV(L), NDAC(L) and NRFD(L). The other five lines are bi-directional control lines.

The 16 lines above, are interfaced to the GPIB controller, IC1, using two TTL to GPIB transceivers, IC2 and IC3. These transceivers are controlled using the T/R1, T/R2 and T/R3 lines on IC1 pins 1, pin 2 and pin 5 respectively.

B12 Memory card (optional) (44830/114)

Overview

This board provides a memory card interface to the Service Monitor. A real time clock chip provides time and date stamping to test results and screen captures. These can be printed directly or stored and later recalled.

Unit replacement

If this unit is replaced by a substitute, recalibration is not necessary.

Connections

This unit is connected to the microprocessor board B2/1 through PLA. Most of the connections are data lines, address lines or read/write control lines. These are listed below under Interface to B2/1 board. Connections not included in that section are listed here.

PLA	Pin 1	Locator blank
	Pin 4	+5 V rail
	Pin 11	Board ground
	Pins 20 to 26	No connection

On the schematic circuit diagram for this board in chapter 7, the memory card connector is shown as PLB.

Power rails

The power rails onto this board are:-

Power rail	Entry point	Nominal current
+5 V	PLA pin 4	

The 5 V supply to the memory card is fed through 22.1 W resistor R12. This resistor prevents current surges occurring when inserting memory cards into the Service Monitor.

Detailed description

Interface to B2/1 board

The interface to the microprocessor board, B2/1, is made through PLA on B12. This is connected to PLE on B2/1, and provides the following:

Label	PLA pin No.	Description
D0 to D7	12 to 19	Bi-directional data lines
BA0 to BA1	2 and 3	Address lines
BWR(L)	9	Write line
BRD(L)	10	Read line
CPAGECS(L)	5	Chip select for memory card address
CARDCS(L)	6	Chip select for memory card data
RES(L)	7	Master reset
CARD FITTED(L)	8	Memory card fitted line

Address decoding

In order to read or write data in the memory card, the address must be set up on the three latches IC2, IC3 and IC4. These latches provide A0 to A22, and REG(L). The REG(L) line is used to access additional attribute data stored in the memory card. (This is information such as card size, RAM or ROM, etc.)

Similarly, in order to read or write data in the real time clock, the address of the appropriate register must be set up. This is done by latching the data lines on the falling edge of AS line (IC9 pin 14).

The corresponding address decoding is achieved using IC1a. This is operated off CPAGECS(L) and BWR(L). It provides the following decoded lines:

Label	Address	Description
1Y0(L)	CPAGECS(L)+0	Write card addresses A0 to A7 (IC4)
1Y1(L)	CPAGECS(L)+1	Write card addresses A8 to A15 (IC3)
1Y2(L)	CPAGECS(L)+2	Write card addresses A16 to A22 & REG(L) (IC2)
1Y3(L)	CPAGECS(L)+3	Write clock register address (IC9)

Reading or writing data in the memory card is done by reading or writing to address CARDCS(L). Data is then buffered through IC5 to or from the memory card.

Reading or writing data in the real time clock is done by reading or writing to address CARDCS(L)+3.

This address decoding is achieved using IC1b, which is operated off CARDCS(L) and provides the following decoded lines:-

Label	Address	Description
2YO(L)	CARDCS(L)+0	Read / write data on memory card
2Y1(L)	CARDCS(L)+1	Not used
2Y2(L)	CARDCS(L)+2	Not used
2Y3(L)	CARDCS(L)+3	Read / write data in real time clock

Interface to memory card

Connection to the memory card is made by PLB. This provides the following signals:

Label	PLB pin No	Description
A0 to A25	See below ‡	Address lines (A23 to A25 not used)
REG(L)	61	Attribute memory select line
D0 to D15	See below ‡	Data lines (D8 to D15 not used)
RDY/BSY(L)	16	Ready/busy line (not used)
CD1(L)& CD2(L)	36 and 67	Card detect - low when the memory card is plugged in
WP(L)	33	Write protect
BVD1 & BVD2	63 and 62	Battery voltage detect
CE1(L) & CE2(L)	7 and 42	Card chip select
OE(L)	9	Data output enable
WE(L)	15	Data write enable

‡ Refer to the circuit diagram for pin connections

CD1(L) and CD2(L) are ORed together using IC7(b) to provide output enables for the address latches and data buffer. This line is called CDPRES(L).

CDPRES(L), WP(L), BVD1 and BVD2 can be read by the B2/1 board through one half of IC6 at address CPAGECS(L). The output enable for that half of IC6 is provided by IC7d.

The other half of IC6 provides buffered versions of chip select, read and write. The output enable for this half of IC6 is provided by CDPRES(L).

Card Fitted line

The design of the microprocessor board B2/1 includes a detection circuit to verify that a memory card interface is fitted to the Service Monitor. As part of Marconi Instruments Ltd. continual

improvement policy, this detection circuit has the capability to detect different versions of the memory card board which might become available or have been supplied with earlier products.

On the memory card only board B6 (not fitted to this instrument), the Card Fitted line (PLA pin 8) is pulled directly to ground and has a pull-up resistor on the microprocessor board B2/1. The state of this line is read by the B2/1 board by reading its option buffer, IC33, at address 5800H and will be low when the board is installed and high when the board is absent.

On the memory card and date/time clock board B12, this line also reports back whether the real time clock chip is fitted.

To test if the memory card option is installed, the B2/1 processor reads the line by reading address 5800H. In this situation, BA0 will be low. BA0 is inverted by IC8b and then fed into one half of IC8a. In this case the output of IC8a (CARD FITTED(L)) will be low. This indicates that the memory card option is installed.

To then test if the clock chip is fitted, the B2/1 processor reads the same line by reading address 5801H. This sets BA0 high and hence IC8b pin 4 low. The CARD FITTED(L) line is then the inverse of IC9 pin 23. When the clock chip is absent, this pin is high and CARD FITTED(L) is low, and when fitted, the pin is low and CARD FITTED(L) is high.

Neither option fitted	Reads 5800H - CARD FITTED(L) = 1
B6 fitted.	Reads 5800H - CARD FITTED(L) = 0
If 0,	Reads 5801H - CARD FITTED(L) = 0
B12 fitted without clock	Reads 5800H - CARD FITTED(L) = 0
If 0,	Reads 5801H - CARD FITTED(L) = 0
B12 fitted with clock	Reads 5800H - CARD FITTED(L) = 0
If 0,	Reads 5801H - CARD FITTED(L) = 1

B10 Parallel interface (optional) (44829/992)

Overview

The Parallel Interface option provides the parallel printer capability to the Service Monitor. It also provides four sets of relay contacts which can be used to remotely control the Mobile or other equipment being tested . The option is physically located at the back of the Service Monitor, next to the fan. The GPIB interface, B7, is also located at the back of the Service Monitor therefore only one of these optional can be fitted at a time.

Board replacement

Replacing this board with a substitute board will not affect the calibration of the Service Monitor.

Connections

The connections to this board are:-

PLA		All from PLG on microprocessor board B2/1
	Pin 1 to 3	No connection
	Pin 4	+5 V rail
	Pin 5	5 MHz clock signal
	Pin 6	No connection
	Pin 7	RESET line
	Pins 8	Board ground.
	Pin 9	CENT FITTED(L) (Parallel option fitted line) Chassis (0V) on this line.
	Pin 10	GPIB FITTED(L) (GPIB option fitted line). No connection on this board.
	Pin 11	GPIB CS(L). Chip select line
	Pin 12	BWR(L). Write line
	Pin 13	BRD(L). Read line
	Pin 14	Board ground.
	Pins 15 to 22	BD0 to BD7. Bi-directional data lines
	Pin 23	Board ground.
	Pin 24 to 26	BA0 to BA2. Address lines
PLB		Accessory port connections. See table 1-17 later in this description
SKA		This connector is the parallel interface port. See table 1-16 in text below.

Power rails

The power rails onto this board are:-

Power rail	Entry point
+5 V	PLA pin 4

Detailed description

Interface to B2/1 board

The interface to the Service Monitor processor board, B2/1, is made via PLA on B10, which is connected to PLG on B2/1. The connections to this, and the other connectors on the board are shown in the table above.

The GPIB FITTED(L) and CENT FITTED(L) lines from this board are read by the 80C188 on the microprocessor board B2/1, to determine which of the options is fitted. On the B2/1 board, both of these lines are pulled high via resistors so that the line is high if nothing is connected to it. On the B10 board the CENT FITTED(L) line is pulled to ground but the GPIB FITTED(L) line is left open circuit to indicate the presence of the B10 board.

Address decoding

The address decoding is performed by IC7.

PM2 board:

IC7 is a 3 to 8 line decoder, which uses BA0 to BA2 as the three address inputs, and GPIB CS(L) as the enable input. Of its eight outputs, only two are used as follows:-

Address	Description
GPIB CS(L) + 0 (TP3)	Write parallel data (IC5) and start strobe (IC4) or Read status (IC1)
GPIB CS(L) + 1 (TP2)	Write to relays (IC6)

Strobe

The strobe is used by the printer to latch the parallel data. It is a 1.6 µs negative pulse, generated using a D-type flip-flop IC3a, and a 4-bit synchronous counter, IC4. It goes through the following stages:-

Reset

On power up, the master reset line from the microprocessor board B2/1 (PLA pin 7), goes high for approximately 300 ms. This is inverted using IC8. It is then used to clear IC3a, and pre-load the outputs of IC4 (pins 14, 13, 12 and 11) with the values at the inputs (pins 3, 4, 5 and 6). This initialises the counter to 1000. The strobe is the most significant bit, QD (pin 11).

The Q output of IC3a (pin 5), is used to enable or disable the clock enable to the counter, IC4 pin 7. This can be monitored on TP1. After reset, this line will be low, disabling the counter clock enable. The counter is clocked using the 5 MHz signal from PLA pin 5.

Starting the strobe

The strobe is started by writing to address GPIB CS(L) + 0. This will produce a negative pulse on IC2b pin 6, which will preset IC3a, setting the counter clock enable high (TP1).

Since the clock enable is now high, the counter will start counting at the 5 MHz rate. After eight clocks (1.6 µs) the most significant bit QD (i.e. the strobe), will go low, as the counter will have wrapped round past 1111 to 0000. After a further eight clocks, the most significant bit will go high again (i.e. 1000). This will clock a 0 into IC3a and cause the Q output (TP1) to go low. This will stop the counter.

Parallel data

Data is written to an 8-bit latch IC5, by writing to address GPIB CS(L) + 0. This will also start the strobe as described above.

The timing relationship between the data and strobe is shown in Fig. 1-19 *Data and strobe timing* below:-

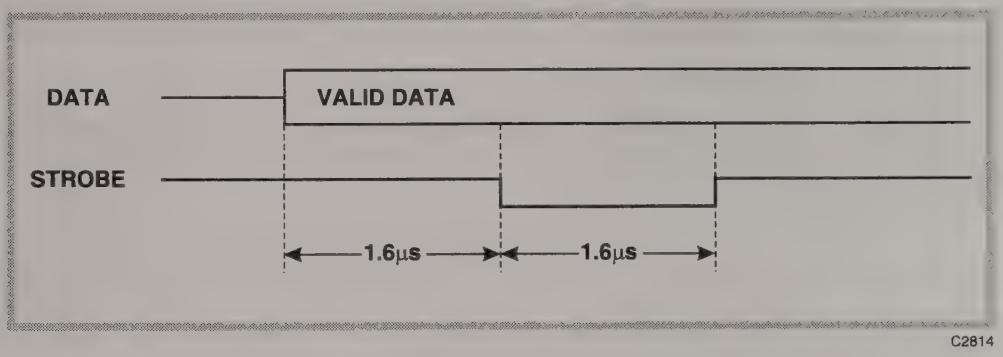

Fig. 1-19 Data and strobe timing

The data output from IC5 is then filtered using R6 to R13 and C2 to C9 and then connected to the parallel connector, SKA.

Status register

The status of the parallel interface can be determined by reading buffer IC1, at address GPIB CS(L) + 0. The status lines from SKA that can be read are, ERROR(L), SEL, PE, BUSY and IO ACK(L). The first four of these lines are direct connections to IC1, but IO ACK(L) needs special treatment.

IO ACK(L) is an output from the printer, which is used to acknowledge that it has read the data sent to it. It is a negative pulse of approximately 12 µs. To avoid constant polling by the microprocessor, acknowledgements are stored in IC3b as follows:-

> When data is written and the strobe started by writing to address GPIB CS(L) + 0, a negative pulse is generated by IC2b pin 6, which clears IC3b and cause the Q output (pin 9) to go low. This is connected to IC1 pin 11, and can be read by the microprocessor. A low on this input means that further data cannot be written to the printer. When the printer acknowledges the data, the IO ACK(L) line will go low and then high again. The low to high transition, will clock a logic 1 into IC3b and cause the Q output to go high. This indicates that data can now be written to the printer.

Parallel interface, SKA

The parallel interface, SKA, provides the following:-

The connections to the parallel port SKA, are listed in table 16 below

Table 1-16 Parallel port connections

Label	SKA pin number	Description
D0 to D7	2 to 9	Data output lines
STB(L)	1	Strobe output
SLIN(L)	17	Select output (pulled low)
AUTOFEED(L)	14	Automatic paper feed output (pulled high)
INIT(L)	16	Reset output (pulled high)
ERROR(L)	15	Error input
SEL	13	Select input - on/off line
PE	12	Paper error input
BUSY	11	Busy input
IO ACK(L)	10	Data acknowledge input

Relay contacts

The four relay contacts are provided by the four relays RLA, RLB, RLC and RLD. These are driven from bits 0 to 3 of latch IC6, through transistor array IC8, at address GPIB CS(L) + 1. A logic 1 from IC6 closes the relevant relay contact. One contact of each relay can also be driven to a TTL level from bits 4 to 7 of IC6. This can be enabled by closing the contacts of switch SW1 which is located on the underside of the board. The factory default is for SW1 to be open.

The four relay contacts plus the 5V supply are fed to connector PLB. A ribbon cable connects to the 9-way D-type Accessory port located on the side of the option. The connections to this are shown in the table below.

Table 1-17 Accessory port connections

IC6 pin No	Description	PLB pin No	9-way D-type pin No
	No connection	1	
	+5V	2	1
2 (bit 0)	Closes RLD contact (b)	3	6
	and RLD contact (a)	4	2
12 (bit 4)	TTL through SW1(d)	4	2
5 (bit 1)	Closes RLC contact (b)	5	7
	and RLC contact (a)	6	3
15 (bit 5)	TTL through SW1(c)	6	3
6 (bit 2)	Closes RLB contact (b)	7	8
	and RLB contact (a)	8	4
16 (bit 6)	TTL through SW1(b)	8	4
9 (bit 3)	Closes RLA contact (b)	9	9
	and RLA contact (a)	10	5
19 (bit 7)	TTL through SW1(a)	10	5

B11 Light-weight power head interface (optional) (44830/074)

Overview

This board is an interface between the accessory socket on the Service Monitor and a proprietary power meter head. The accessory socket provides the following connections:-

Pin on front panel DIN socket	Description
Shield	0V
1	TTL output
2	+12V
3	TTL input
4	Forward Power
5	Reverse Power
6	TTL input
7	Demod out

The power meter head requires the following connections:

Pin on power meter head DIN plug	Description
Shield	0V
1	I^2C data
2	-5V
3	0V
4	Forward Power
5	+7.35V
6	I^2C clock
7	+5V
8	Reverse Power

Power supply generation

+5V

This is generated from the +12V from the accessory socket using a 5V regulator, IC4.

+7.35V

This is generated using an op-amp, IC5a, with +5V as the reference and +12V as the supply.

The power meter draws 6 mA under worst state conditions. The op-amp is capable of supplying up to 20 mA.

-5V

This is generated using an op-amp, IC5b. It is configured to have a gain of −1, and uses +5 V as the reference.

The negative supply to the op-amp is generated by a diode pump which works by switching one plate of C5 between +12V and 0V using TR3 and TR4. Due to D2, the other plate of C5 will alternate between 0V and -12V. The peak negative voltage is then held on C6 using D3.

The square wave that drives the diode pump is generated using R6, C4 and IC1d at a frequency of approximately 25 kHz.

I²C interface

Data communication to the power meter is made using an I²C interface. This consists of a bi-directional data line, SDA, and a clock, SCL. Fig. 1-20 *A typical I²C data transfer waveform* shows the event timing between SDA and SCL.

Data is transferred as follows:-

A. Initially, SDA and SCL are both high.

B. When communication is required, a START condition is generated. This requires SDA to go low while SCL is still high. This operation starts the clock, SCL.

C. SCL is then used to clock the data into the receiving device. SDA must be stable while SCL is high, i.e. the data can change state only when SCL is low.

D. After 8 bits have been transferred, the receiving device pulls SDA low for the duration of the 9th clock cycle. This acknowledges the data.

E. Communication is ended with a STOP condition. This is generated by sending SDA high while SCL is high.

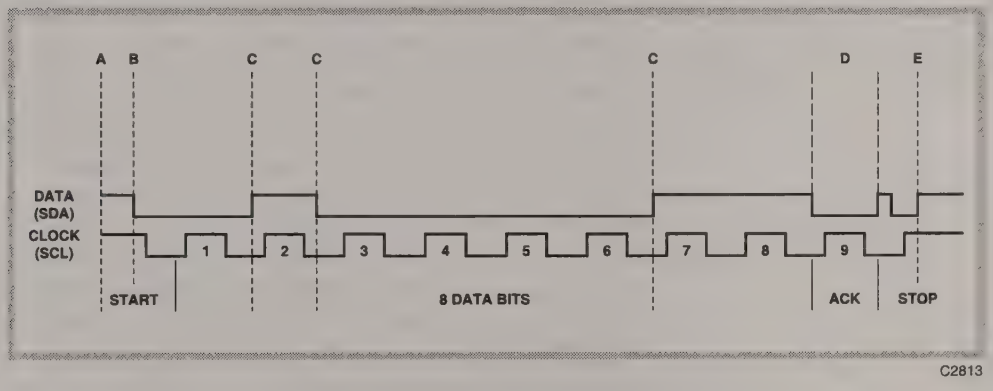

Fig. 1-20 A typical I²C data transfer waveform

SDA interface to accessory socket

The data line, SDA, is bi-directional and is therefore connected to both the output and one of the inputs of the accessory socket. Unfortunately, the output from the accessory socket has a slow rise time and this needs to be squared up before it can be sent to the power meter. This is done by R12 to R16, TR5 and TR6. The collector of TR6 is then sent to the power meter and back to the input of the accessory socket. This means that the input of the accessory socket will see both data from the power meter and data from the Service Monitor.

SCL generator

The clock (SCL) generator consists of R1, R2, R3, C1, TR1 and IC1a and IC1b. The SCL output appears on the collector of TR1 and this is fed to both the power meter and the spare input of the accessory socket. Pin 5 of IC1b is used to switch the SCL generator on or off (a logic 1 on this input enables the generator). When disabled, SCL will stop in the high state. When enabled, SCL should be a square wave of approximately 250 Hz.

Reset circuit

The reset circuit consists of C2, R4, D1 and IC1c. This ensures that the interface starts in a known state after being plugged in to the accessory socket. Its output is fed to the SCL control circuit:

SCL control circuit

This consists of IC2 which is a dual JK flip-flop. Its functionality is summarised below:-

Inputs			Function	Outputs	
J	K(L)			Q	Q (L)
0	1	>CLOCK>	No change	Same as previous outputs	
0	0	>CLOCK>	Clear	0	1
1	1	>CLOCK>	Set	1	0
1	0	>CLOCK>	Toggle	Invert previous outputs	

IC2 is used to detect start and stop conditions and to enable and disable the SCL generator accordingly. The circuit goes through the following states:

Reset:

This pulls the preset to IC2b pin 11 active causing the Q(L) output of IC2b pin 9 to be low. This disables the SCL generator leaving SCL high. This also clears IC2a leaving the Q output of IC2a pin 6 low.

SDA goes low while SCL is high - start condition: (B on Fig. 1-20)

This pulls the K(L) input of IC2b pin 13 low. IC2b is clocked at 25 kHz from IC1d pin 11 so the Q(L) output (IC2 pin 9) will then go high. This enables the SCL generator and also releases the clear input to IC2a pin 1.

SDA changes state while SCL is low - normal data transmission: (C on Fig. 1-20)

This will have no effect. A positive edge of SDA will clock IC2a. But the J input (IC2 pin 2) is connected to SCL which is low. Therefore the Q output of IC2a pin 6 will stay low. SDA is also fed to the K(L) input to IC2b pin 13, but since the J input pin 14 is low, this will either cause a 'no change' or 'clear' on IC2b. Both these will keep the Q(L) output pin 9 high.

SDA goes high while SCL is high - stop condition: (E on Fig. 1-20)

This will clock IC2a while the J input (pin 2) is high. This will cause the Q output (IC2 pin 6) to go high. This is fed to the J input of IC2b pin 14. This will set IC2b causing the Q(L) output pin 9 to go low, disabling the SCL generator.

SYSTEMS

B3/1 Cellular radio systems board (optional) (44830/181)

Overview

The Analogue Systems Card allows the Service Monitor to test the TACS, AMPS and NMT cellular systems and the MPT1327 (BAND III) and EDACS† trunking system. It is based on the 68000 microprocessor and connects to the PLE connector on the B2/1 board to communicate with the main 80C188 processor of the Service Monitor. The necessary signalling is achieved using three DSPs - one for generation and two for reception. The 68000 communicates with the DSPs through a gate array. The analogue interface is performed by a dual 18-bit CD DAC on the generation side, and a 12-bit ADC on the reception side.

†The EDACS SYSTEM test software, for the Service Monitor, is produced by Marconi Instruments Ltd. under licence from Ericson GE.

Board replacement

Replacing this board with a substitute board will not affect the calibration of the Service Monitor. Data in the on-board memory will be lost if the battery supply is disconnected. The SYSTEMS software will then have to be re-enabled using the passwords relevant to the particular instrument.

Connections

The connections to this board are:-

PLA		Multi-pin connection from microprocessor board B2/1. (refer to the relevant circuit diagram for pin connections).
PLB	Pins 1 & 3	Board ground.
	Pin 2	Modulation out to audio processor B1/2
	Pin 4	TTL level output for carrier ON/OFF on B1/2
	Pin 5	Spare TTL output.
	Pin 6	Spare TTL output.
PLC	Pins 1 & 3	Board ground.
	Pin 2	Audio out to audio processor B1/2
PLD	Pins 1 & 3	Board ground.
	Pin 2	demod and AF from audio processor B1/2
PLE	Pins 1 & 3	Board ground.
	Pin 2	Log amplifier output from audio processor B1/2

Power rails

The power rails onto this board are:-

Power rail	Entry point
-12 V	PLA pins 26 & 28
+5 V	PLA pins 4, 31 & 32
+12 V	PLA pin 25 & 27

Detailed description

Microprocessor (sheet 1)

The 68000 microprocessor, IC13, has a 16-bit external data bus and a 23-bit external address bus. The processor accesses external devices using a Read/ Write(L) (R/W(L)) line, a Lower Data Select(L) (LDS(L)) and an Upper Data Select(L)(UDS(L)). LDS(L) is used to access D0 to D7 and UDS(L) is used for D8 to D15. To access all 16 bits together, both LDS(L) and UDS(L) are pulled active simultaneously. Because of this, the address lines are labelled A1 to A23 (no A0). The memory uses all 16-bits but all other peripherals are 8-bits (D0 to D7).

The memory provided on the B3/1 board is 1M byte of EPROM from two 27C040s, IC16 and IC17 and 256k bytes of NOVRAM. This is configured from two 628128s, IC20 and IC21, maintained by an off-board 3.5 V lithium battery. The battery is connected through PLL. The memory capability is expandable to 4M bytes of EPROM and 1M byte of NOVRAM.

The full memory map is shown below (the address is specified in bytes).

Address	Description	IC number
000000H to 0FFFFFH	EPROM (27C040)	IC16 & 17
100000H to 1FFFFFH	EPROM (27C040) spare	IC18 & 19
420000H to 43FFFFH	NOVRAM 628128	IC20 & 21
700000H to 73FFFFH	B2/1 bridge data	IC2 & 5
740000H to 77FFFFH (read)	B2/1 bridge status	IC8
740000H to 77FFFFH (write)	ROM size latch & analogue select	IC12
780000H to 7BFFFFH	Gate array - DSP bridges	IC22

The address decoding is done in a PAL,.IC14. In order to allow different size EPROMs, a 2-bit code is written to the ROM size latch, IC12, pins 16 and 19. This code is used by the PAL to generate the appropriate address decoding. The codes are shown below.

IC12		EPROM		IC16 & IC17	IC18 & IC19
Pin 19	Pin 16	Type	Size	Address	Address
0	0	27C020	256 k bytes	000000H to 07FFFFH	080000H to 0FFFFFH
0	1	27C040	512 k bytes	000000H to 0FFFFFH	100000H to 1FFFFFH
1	0	27C080	1 M bytes	000000H to 1FFFFFH	200000H to 3FFFFFH

B2/1 Bridge (sheet 1)

There is a two-way data communications bridge between the B3/1 and the B2/1 boards. The link is between PLA on the B3/1 board and PLE on the B2/1 board. The bridge consists of IC1 to IC8 and IC33 to IC35.

Data from B3/1 to B2/1 is written by the 68000 to address 700000H, IC5. At the same time, a logic high is latched onto IC6 pin 8, which switches TR3 on and generates an interrupt (CELL

INT(L) on TP6) for the B2/1 board. When the 80C188 on the B2/1 board reads the data from IC5, IC6 pin 8 is cleared and CELL INT(L) returns high. The status of the interrupt line is passed through IC7a and is buffered by IC8. This allows the 68000 to read IC8 (address 740000H) and only write new data to IC5 once the previous data has been read.

If a quick response from the B2/1 board is required, the 68000 can generate a NMI(L) interrupt (TP5) instead of a CELL INT(L). This is done by writing to address 700001H instead of 700000H. This still writes to IC5 but a logic high is latched onto IC6 pin 5 which turns TR2 on.

Data from B2/1 to B3/1 is written by the 80C188 on B2/1 to IC2. On doing so, a logic low is latched onto IC3 pin 6 (TP3) which is an interrupt input to the 68000. The data can then be read by the 68000 by reading address 700000H. This sets IC3 pin 6 back high clearing the interrupt. The status of this interrupt is fed to IC8 and can thus also be read by the 68000 by reading address 740000H. The interrupt line is also fed back to the B2/1 board as CELL BUSY(L) so that the 80C188 on the B2/1 board will not write another byte until the present one has been read by the 68000.

Reset and clock (sheet 1)

The reset line for the B3/1 board is controlled by the B2/1 board. At power-on, the B3/1 RESET(L) line (TP1) is set low (active) using IC35a. This holds the 68000, the gate array and the DSPs in reset. In order to release the reset line, the 80C188 on the B2/1 board writes a high to its I/O address E101H. This can be used to hold the B3/1 board in reset if it is not being used.

The master clock for the B3/1 board is 10 MHz and this is provided by the B2/1 board through PLA. It can be monitored on TP2.

Interrupt Disable (sheet 1)

The 80C188 on the B2/1 board has the ability to disable interrupts from the B3/1 board. This is done by writing to E101H with D0 set. This clears IC35 pin 8, which gates out the interrupts using IC33b and IC33c.

B2/1 Address	Description
E000H E001H	Data read/write to B3/1 bridge D7 - 0 = reset B3/1 board, 1 = release reset D0 - 0 = enable bridge interrupt, 1 = disable interrupt

RF output suppression (Sheet 1)

Some of the test options within the SYSTEM mode (notably EDACS repeater) require a fast response method of suppressing the RF carrier. This is provided by a TTL line from the Q5 output of IC12 (pin 15), through PLB pin 4 to the audio processor board B1/2. See RF carrier suppression within the B1/2 description.

The Q4 output (pin 12) and the Q3 output (pin 9) of IC12 are routed to PLB Pins 5 and 6. They are unused in the Service Monitor covered by this manual.

DSP Controller Gate Array (sheet 2)

The DSP controller is programmed into an ACTEL 1020 gate array IC22. This contains eight internal registers which provides the processor interface to the three DSPs, IC23, IC24 and IC25. The internal registers are located at 68000 addresses 780000H to 780007H.

On the DSP side of the gate array, all the data lines, address lines, and control lines for the three DSPs are connected together onto a common bus, which is fed into the gate array. In order to prevent contentions on the bus, the gate array controls the bus request (BR(L)) line for each DSP. The gate array gives each DSP a time slot to use the bus, by pulling its BR(L) line low. The other two DSPs will be tri-stated. Once that time slot is over, the gate array pulls that BR(L) line high and then pulls the BR(L) line for the next DSP low. Because the DSPs run from internal memory, only external accesses such as reading or writing to the 68000 bridge inside the gate array will be slowed down by this arbitration.

D to A converter and oversampling filter (sheet 3)

The B3/1 board provides 2 analogue outputs - MOD OUT (PLB) and AF OUT (PLC). MOD OUT is used to modulate the carrier generated by the Service Monitor, and AF OUT is fed to the Service Monitor so that it can make measurements on the signal, and feed the results back to the B3/1 board. MOD OUT and AF OUT can be monitored on TP24 and TP25 respectively. These 2 outputs are provided by the oversampling filter, IC26, and the CD DAC, IC30. The oversampling filter is driven by a serial link that provides 2 sets of 16-bit data, one for each channel. The MOD OUT is the left channel and the AF OUT is the right channel. The oversampling filter is a 4 times oversampling filter that provides 18 bits to the CD DAC, IC30. This is done to raise the sampling rate, so that there is a large frequency gap between the highest frequency required and the sampling frequency. The filters on the output, IC31, can then have gentle cut-off rates and hence be simple in design.

The sampling rate (before the 4 times oversampling filter) is 52.0833 kHz.

Interface between DSPs and DAC (sheet 2)

The serial link to the oversampling filter consists of 3 lines - S OUT (serial data), BCK (clock to latch data in) and LRC (left/right channel indicator). These 3 signals come from the gate array, IC22, and can be monitored on TP15, TP14 (this is actually the inversion of BCK) and TP16 respectively. TP16 should be a 52.0833 kHz square wave and TP14 should be a 3.333 MHz wave consisting of 200 ns high then 100 ns low. DSPs IC23 and IC25 both have access to the DAC and each of their serial links (pins 52, 53 and 56) are fed into the gate array. From these, the gate array generates the 3 lines S OUT, BCK and LRC. The serial data from the 2 DSPs are multiplexed within the gate array onto S OUT and, under control from the 68000, data from either of the 2 DSPs can be selected for the left and right channels. For example, IC23 may use the left channel (MOD) but IC25 may use the right channel (AF).

A to D converter (sheet 3)

The demodulated carrier or the signal from the AF IN socket on the Service Monitor is fed to the DEMOD/AF IN connector (PLD) on the B3/1 board. This input is prevented from exceeding +/-5V using D3, D4 and R53. The signal is then fed to an analogue multiplexer, IC32, together with the MOD OUT and AF OUT signals. Using S0 to S2 from IC12 on sheet 1, the 68000 can select which of these signals is fed to the output of the muliplexer, pin 3. In normal operation, the DEMOD/AF signal is fed to the output. This output can be monitored on TP23. The signal is then passed through an anti-aliasing filter built around IC29a. The output from this is fed into the input of the A to D converter, IC28, and can be monitored on TP20. The A to D converter is 12 bits and is clocked regularly by the gate array at 104.166 kHz. This rate is exactly twice that of the D to A sample rate. This allows signals to be sampled by the ADC, filtered by one or more DSPs, and then fed out to the DAC. This is done when either of the psophometric filters are used.

Interface between DSPs and ADC (sheet 2)

The ADC connects directly to the gate array, IC22, through 3 lines, S IN CLK, S IN DATA and CONVST(L). S IN DATA is serial data from the ADC and can be monitored on TP18. S IN CLK is the serial clock from the ADC which can be monitored on TP26. The gate array, uses these 2 signals to clock the 12-bit data from the ADC into an internal shift register to produce parallel data. This data is then available to be read by DSPs IC24 and/or IC25. CONVST(L) is the start conversion pulse from the gate array to the ADC whose frequency is 104.166 kHz. It consists of 300 ns low pulses every 9.6 us. CONVST(L) can be monitored on TP17.

-5V generator (sheet 3)

IC28, IC30, IC32, D2, D4 and D6 require a -5V supply. This voltage is not provided by the connection from the B2/1 board, PLA. Therefore, a -5V regulator, IC27, is used to provide the voltage from the -12V supply.

Carrier detect (sheet 3)

The receive DSP, IC24, takes the demodulated signal from the ADC and decodes it to extract data. However, if the carrier is not present, the demodulated signal will be noise and this can sometimes be decoded by IC24 as false data. To prevent this, a carrier detect circuit is used. This takes the log amp signal from the Service Monitor at PLE and passes it to a comparator, IC29b. This comparator provides a logic 1 when a carrier is present and a logic 0 when there is no carrier. This logic line is fed to the FLAG IN line, pin 55, on IC24. The DSP can then monitor this line and only decode signals when this line is at logic 1.

The output from IC29b, pin 7, will switch to logic 1 when PLE pin 2 rises above 3.8V and will switch to logic 0 when PLE pin 2 falls below 2.7V.

Chapter 2
ACCESS AND LAYOUT

Contents

Servicing policy 2-2
Mechanical layout of the Service Monitor 2-2
Removing boards and modules 2-4
A2, A3, A4/1, A6/1, A7/1, A8/1, A9/1 and A10 2-4
A11/1, A15, and B3/1 2-5
A20 and A21 2-5
B1/2 2-7
B2/1 2-7
B4 2-8
B7 2-8
B10 2-8
B13 and B13/1 2-8
Power supply module 2-8
Keyboard and display 2-8
Ventilation fan and filter 2-11

List of figures

Fig. 2-1 Locations of printed circuit boards and sub assemblies 2-3
Fig. 2-2 Removal and fitting of attenuators A20 and A21 2-7

Servicing policy

Marconi Instruments Ltd. provides world-wide backup for this instrument through our service agents and offices. The addresses of these are listed at the end of this manual.

For the majority of 2948 boards and modules, support to component level and a board/module exchange service are provided. For lists of replaceable parts refer to Chapter 5.

The following modules are not supported to component level, but can be exchanged as complete units:-

Unit	Part number
Power supply module	44991/179
A20 attenuator, 3 stage	44429/080
A21 attenuator, 2 stage	44429/081
Display module	28624/308†
Front panel/keyboard	46662/603‡

† The display module is supplied with the integral back-light fitted. The back-light inverter is also supplied, attached to the module by its supply cable.

‡ The front panel and keyboard assembly is supplied with the press keys and LEDs fitted, but with cut-outs for rotary controls and connectors

Mechanical layout of the Service Monitor

Most of the active circuits of the Service Monitor are contained on multi-layer printed circuit boards, which are fitted to sub-assemblies within the instrument. There are also complete sub-assemblies such as switched attenuators and the power supply module. Fig. 2-1 shows the location of the printed circuit boards and sub-assemblies.

Access to interior

All of the printed circuit boards used within the Service Monitor contain components which can be damaged by static electricity. Refer to the precautions at the beginning of this manual.

The outer metal case of the Service Monitor must be removed to obtain access to the interior. Before doing this, disconnect all connections, including the mains connection and/or DC supply connection.

Stand the Service Monitor face down on a firm, non-scratch surface so that it is supported on the front handles.

From the rear of the Service Monitor, remove the six screws holding the metal case to the main frame.

Slide the metal case upward until it is clear of the main frame. Store the metal cover and the screws in a safe location until required for re-assembly.

Return the Service Monitor to the normal position, again making sure that it is laying on a smooth surface, and that there are no foreign objects underneath it which may cause damage.

Board types

As boards and modules used in this equipment are subject to continual improvement, some type identification codes contain a suffix (-/1, -/2 etc.). Those on boards or modules in some instruments may differ from this drawing. Boards or modules indicated by an asterisk* are related to Service Monitor options, therefore these items are not always fitted.

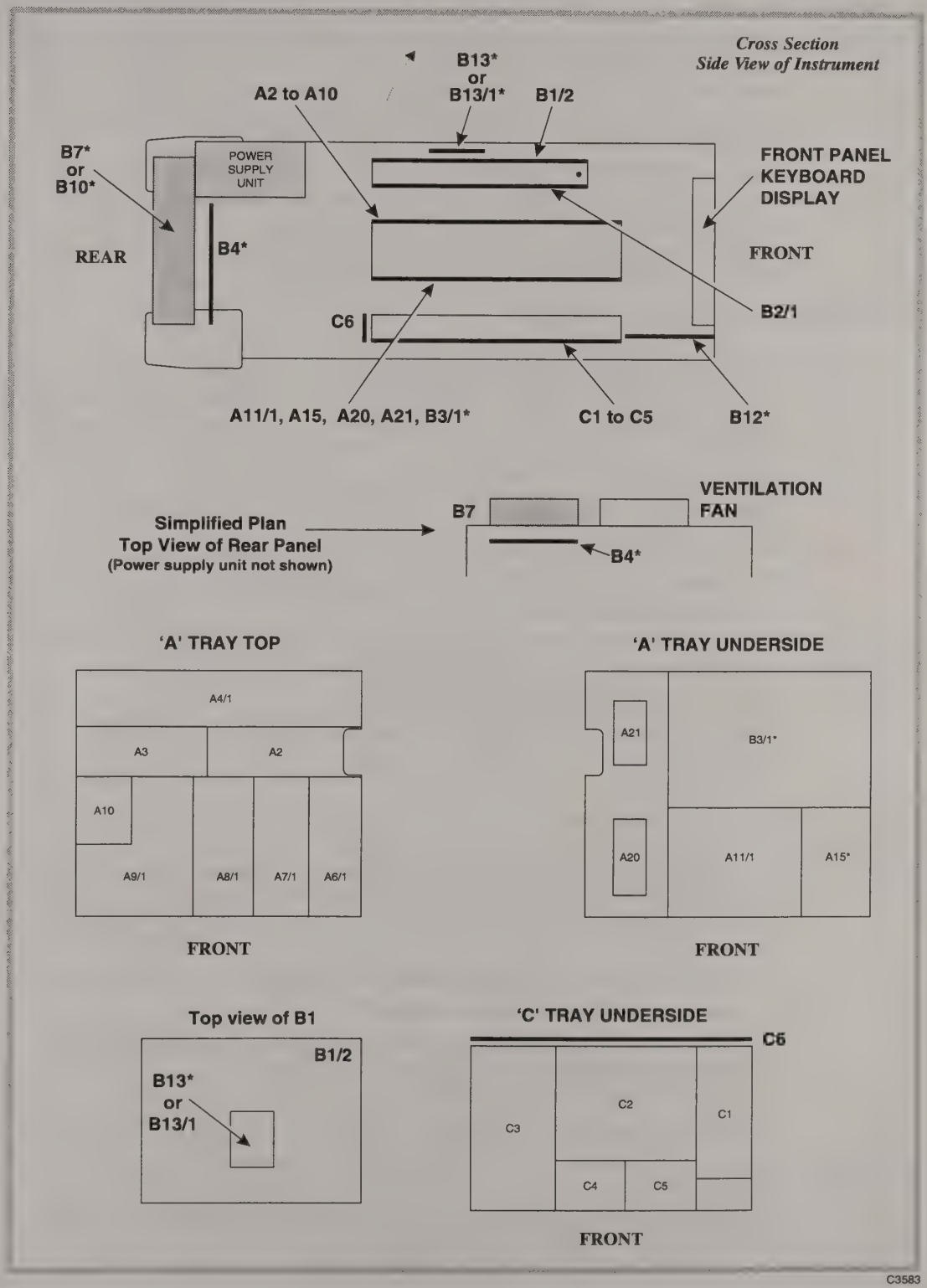

Fig. 2-1 Locations of printed circuit boards and sub assemblies

Access to boards

The following instructions explain how to gain access to the individual boards and assemblies. When screws and other parts have been removed, store them in a safe place. Ensure that the correct screw type will be used for re-assembly.

The re-assembly procedure is the reverse of the dismantling procedure unless specifically mentioned to the contrary.

It is assumed that the outer metal case has been removed.

As boards and modules used in this equipment are subject to continual improvement, some type identification codes contain a suffix (-/1, -/2 etc.). On some boards or modules the type identification code may differ from that shown in the following procedures. The procedure remains unchanged unless specifically otherwise mentioned.

Removing boards and modules

Do not remove boards or modules unless you are certain that it is necessary.

Most boards are held in place by a number of M3 screws. These screws should not be removed until after the electrical connections to the board have been disconnected. Some of these are rigid or semi-rigid soldered connections, some are screw fitted coaxial connections, while others are push fit devices. A list of the connections to each board or sub-assembly is given with the technical description of it in chapter 1.

Some small sub-boards are fitted to main boards using nylon self-locking supports.

A2, A3, A4/1, A6/1, A7/1, A8/1, A9/1 and A10

These boards are all located on the top of the receiver RF tray.

Access to them is achieved as follows:-

Pivot the tray containing boards B1/1 and B2/1 as described for gaining access to board B2/1.

Take care to disconnect the connections described there.

Remove the power supply unit as described for that unit.

Loosen, by one turn, each of the screws retaining the top lid of the receiver RF tray.

When all have been loosened, remove them completely.

Lift the lid from the tray.

The boards are then accessible.

B12

The optional memory card and date/time stamp board is accessible from the bottom. It is fitted with the component side uppermost, between the front of the tray containing boards C1 to C5 and the front panel of the Service Monitor. To remove the board and gain access to the components proceed as follows.

- Remove the two screws securing the board assembly to the front of the RF oscillator tray.
- Disconnect the ribbon cable connected to the PCB.
- Lift the rear of the board assembly slightly and slide it towards the rear of the Service Monitor, disengaging the front of the board from its location.
- Remove the four screws holding the PCB to the fixing plate.

The board components are now accessible.

C1, C2, C3, C4 and C5

The boards that make up the RF oscillator are all located on the bottom tray of the Service Monitor. To gain access to them, proceed as follows:-

Remove the memory card board B12 as described above.

Loosen, by one turn, the screws holding the tray cover in position.

When all have been loosened, remove them completely.

Lift off the cover.

All the boards are then accessible.

A11/1, A15, and B3/1

These boards are located on the underside of the RF tray and are accessible from the bottom of the Service Monitor. A11/1 and A15 are screened with a removable metal cover

Access to them is achieved as follows:-

1. Make sure that the tray containing boards B1/1 and B2/1 is secure and in place.
2. Lay the Service Monitor 'bottom up' on a firm, smooth surface.
3. If the memory card board assembly B12 is fitted, disconnect the ribbon cable to it and remove the board by removing the two screws holding it in place.
4. If the cellular systems board B3 and/or the demodulation filter board B8 is fitted, note the correct location of each connection to it (to ensure correct re-assembly) then disconnect them. † See the reference below to Lithium Thionyl Chloride battery for B3/1 memory. The boards do not have to be removed from the options tray.
5. Loosen the six screws which hold the option tray to the main chassis. This tray may not be fitted if no optional boards are fitted.
6. When all have been loosened, remove them completely and lift the tray away, making sure that the tray does not fall free and cause damage.
7. Loosen, by one turn, the screws securing the cover to the RF tray underside.
8. When all have been loosened, remove them completely and lift the lid clear.

The boards are now accessible.

Lithium Thionyl Chloride battery for B3/1

† When B3/1 board is fitted, a 3.5 V Lithium Thionyl Chloride battery is fitted to the top tray of the Service Monitor adjacent to the audio processor board B1/2. A flexible cable connects this to in line connector PLL and is used to power the on-board memory. If this is disconnected, the data in the on-board memory will be lost. The SYSTEMS software will then have to be re-enabled using the passwords relevant to the particular instrument.

A20 and A21

These attenuator units are located on the right-hand under-side of the receiver RF tray. There are no user-replaceable parts within them, therefore access to the inside is not described. To remove them as complete units proceed as for access to A11, A12 etc. The RF tray lid must be removed to disconnect A20 before it can be removed. A21 can be removed with the RF tray lid in position.

A20 removal

To remove the A20, three stage attenuator, continue as follows:-

1. Remove the SMA connection to the END of the attenuator (C on Fig. 2-2).
2. Disconnect the ribbon cable to PLA on the attenuator.
3. De-solder the centre pin of the SMA bulkhead connector from the input/output switching board A11 (Point B on Fig. 2-2).
4. Loosen the two hex head screws holding the connector to the RF tray wall, to allow slight movement of the connector (Point B on Fig. 2-2).
5. Remove the two screws holding the attenuator to the RF tray (G in Fig. 2-2). These screws have a crinkle washer and a spacer fitted to them. DO NOT loosen or remove any of the screws holding the attenuator cover in position. A spacer plate is fitted under the attenuator. If this is not fixed to the RF tray, store it in a safe place until required to refit the attenuator.
6. With the attenuator now free to move to the edge of the Service Monitor, disconnect the SMA connection A to the side of the attenuator.

The attenuator can now be lifted from the Service Monitor.

A20 refitting

To refit the A20, three stage attenuator, proceed as follows:-

1. De-solder the centre pin of the SMA bulkhead connector from the input/output switching board A11, if it is not de-soldered. (Point B on Fig. 2-2).
2. Loosen the two hex head screws holding the connector to the RF tray wall, to allow slight movement of the connector, if they are not already loose (Point B on Fig. 2-2).
3. If the spacer plate (mentioned in 5 above) is a loose item position it on the RF tray as shown in Fig. 2-2.
4. Position the attenuator over the spacer plate and when correctly positioned, mate the two parts of connector A and tighten using light finger pressure.
5. Fit the attenuator to the body of the Service Monitor using the two fixing screws, but leave these loose so that the attenuator can move. These screws must have a spacer and crinkle washer fitted to them as shown in Fig. 2-2.
6. Mate and tighten the SMA connection on the side of the attenuator to a torque of 1.2 NM.
7. Tighten the two screws holding the attenuator to the Service Monitor to a torque of 0.6 NM.
8. Tighten the two hex head screws holding the bulkhead SMA connector to the RF tray wall (Point B on Fig. 2-2).
9. Re-solder the centre pin of the SMA bulkhead connector to the input/output switching board A11. (Point B on Fig. 2-2).
10. Ensure that the conformable cable fitted to the SMA connector C is tight at the RF tray end, then preform the cable as per the drawing so that it aligns with the SMA connector on the attenuator.
11. Fit and tighten the SMA connection at point C to a torque of 1.2 NM.
12. Refit the ribbon cable to PLA on the attenuator.

A21 removal

To remove the A21, two stage attenuator continue as follows:-

1. Disconnect the ribbon cable to PLA on the attenuator.
2. Disconnect the SMA connectors to the end and side of the attenuator (D and E on Fig. 2-2).
3. Remove the two screws holding the attenuator to the RF tray (F in Fig. 2-2). These screws each have a flat washer, a spacer and a crinkle washer fitted to them. DO NOT loosen or remove any of the screws holding the attenuator cover in position.

The attenuator can now be lifted from the Service Monitor.

A21 refitting

To refit the A21, two stage attenuator, reverse the procedure above. Note that the two screws used to fit this attenuator each have a flat washer, a spacer and a crinkle washer fitted to them as shown in Fig. 2-2. They should be tightened to a torque of 0.6 NM.

Before fitting the SMA conformable cables to the attenuator, ensure that the cables are tightened at the RF tray end. Preform them as per the drawing so that they align with the attenuator connectors. Finally tighten the SMA connectors on the attenuator to 1.2 NM.

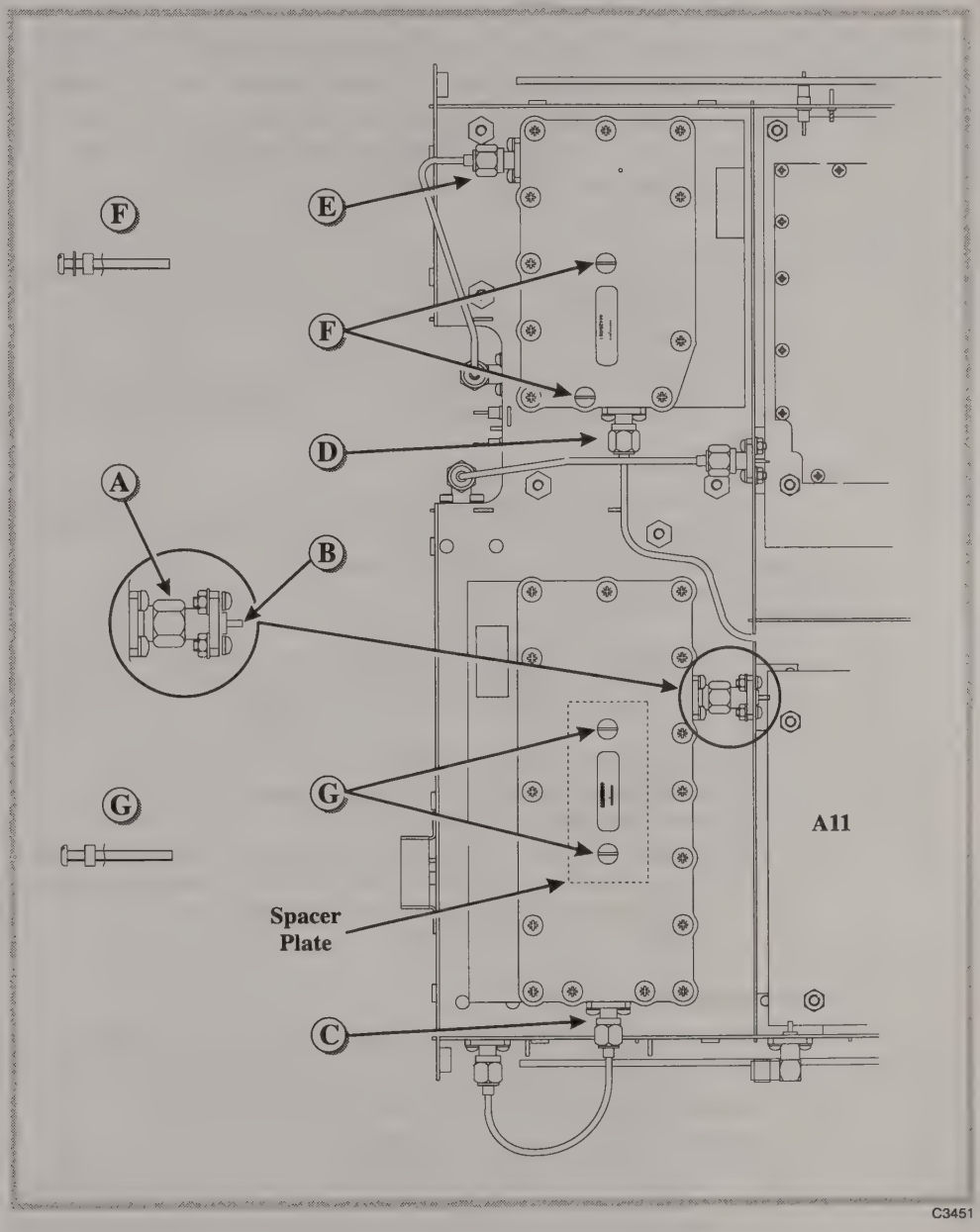

Fig. 2-2 Removal and fitting of attenuators A20 and A21

B1/2

The audio processor board B1/2 is accessible when the metal cover is removed. All test points and adjustment controls required to carry out the adjustment and calibration procedures to this board are accessible with no additional dismantling.

B2/1

The microprocessor board B2/1 is located on the underside of the tray containing B1/2. To gain access to it, remove the six tray retaining screws, (three each side), and loosen the two tray pivot screws. Carefully raise the rear of the tray, until the flexible cable to the serial interface connector PLJ, and any other connections which prevent the tray from being raised, can be disconnected. With these connections removed, the tray containing board B2/1 can be pivoted upward, until it rests at an angle, over the front of the Service Monitor.

B4

The 600 W Interface board is fitted to the inside of the rear panel. It is held in place by four screws, nuts and washers, with nylon spacers between the board and the rear panel.

To remove this board, first disconnect the multi-pin and single pin connectors. To remove the board from the rear panel, remove the nuts and washers from the screws. Lift the board from the screws, taking care not to loose the nylon spacers.

B7

The optional GPIB interface unit is located on the rear of the Service Monitor as an alliterative to the parallel interface unit. It is held in place by three screws. A ribbon cable connects it to PLG on the microprocessor board B2/1.
The printed circuit board within the unit is fitted with the component side covered. To gain access to the component side, remove the nuts retaining the GPIB connector to the interface case, followed by the two screws holding the PCB to the cover. The PCB will now be free.

B10

The optional parallel interface unit is located on the rear of the Service Monitor as an alternative to the GPIB interface unit. It is of similar construction to that unit and connects to the microprocessor board B2/1 in the same way.

B13 and B13/1

The Service Monitor can include an optional psophometric filter. This can be either the CCITT filter B13 or the CMESS filter B13/1. These filters are built as sub-boards and are fitted directly to the audioprocessor board B1/2 using nylon supports. They are not fitted to the audioprocessor board B1/1.
The top side of B13 or B13/1 is accessible from the top of the Service Monitor. To remove B13 or B13/1 for access to the under side continue as follows:-
Disconnect the multipin connection.
Use a suitable cylindrical compression tool to compress the fingers of one nylon support. Slightly lift the corner of B13 or B13/1 and allow the hole in the board to replace the compression tool. Use the same method to release each corner of the board taking care not to damage B13 or B13/1 or the audioprocessor board.

Power supply module

The power supply module is not user-repairable. In the event of failure, a replacement module should be fitted, and the faulty module returned to a Marconi Instruments Service Centre.

To remove the power supply unit, proceed as follows:-

- Disconnect the three multi-way connections to left-hand end of the unit.
- Disconnect the two multi-way connectors to the right-hand end of the unit.
- Disconnect the three single connectors to the right-hand end, noting the position of each. (Red to '+ve', Black to '-ve' and Green to 'E').
- Remove the six screws securing the unit to the main frame. †See below.
- Remove the plastic cover at the right-hand end of the unit and fit to the replacement.

The unit can then be removed.

†The screws securing the power supply module should not exceed 6 mm in length or internal short circuits might result. If longer screws are found already fitted, replace them with 6 mm screws. The MI part number for these is 21833/010.

Keyboard and display

The keyboard and the display are both accessible after removing the front panel. It is recommended that the front is not removed unnecessarily, as there are many connections to the various connectors and controls. If removal is necessary, proceed as follows:-

- Remove the memory card board assembly B12, as described above.

- Do not attempt to remove the two BNC RF connectors or the N type RF connector and power load from the front panel at this stage. If the front panel is to be replaced by a new unit, these items should be fitted to the replacement unit before fitting it to the Service Monitor.
- Disconnect the conformable cable SMA connection from the rear of the RF power load assembly to avoid undue strain and flexing.
- Remove the conformable cable SMA connections for the Antenna input and the BNC RF output **at the RF tray** to avoid undue strain and flexing.
- Remove the two screws at the left side and three at the right side securing the front panel to the main frame. Do not loosen the four screws securing the RF load to the right-hand side of the front panel assembly. If the front panel is to be replaced by a new unit, this item should be fitted to the replacement unit before fitting it to the Service Monitor.
- When the front panel is loose from the main frame, remove connections as necessary to allow access to the appropriate unit.

CAUTION

Routine safety testing and inspection

In the UK the 'Electricity at Work Regulations' (1989) section 4(2) places a requirement on the users of equipment to maintain it in a safe condition. The explanatory notes call for regular inspections and tests together with a need to keep records.

The following electrical tests and inspection information is provided for guidance purposes and involves the use of voltages and currents that can cause injury. It is important that these tests are only performed by competent personnel.

Prior to carrying out any inspection and tests the equipment must be disconnected from the mains supply and all external signal connections removed. All tests should include the equipment's own supply lead, all covers must be fitted and the supply switch must be in the 'ON' position.

The recommended inspection and tests fall into three categories and should be carried out in the following sequence:

1. Visual inspection
2. Earth bonding test
3. Insulation resistance test.

1. Visual inspection

A visual inspection should be carried out on a periodic basis. This interval is dependant on the operating environment, maintenance and use, and should be assessed in accordance with guidelines issued by the Health and Safety Executive (HSE). As a guide, this equipment, when used indoors in a relatively clean environment, would be classified as 'low risk' equipment and hence should be subject to safety inspections on an annual basis. If the use of the equipment is contrary to the conditions specified, you should review the safety re-test interval.

As a guide, the visual inspection should include the following where appropriate:

Check that the equipment has been installed in accordance with the instructions provided (e.g. that ventilation is adequate, supply isolators are accessible, supply wiring is adequate and properly routed).

- The condition of the mains supply lead and supply connector(s).
- The correct rating and type of supply fuses.
- Security and condition of covers and handles.
- Check the presence and condition of all warning labels and markings and supplied safety information.
- Check the wiring in re-wireable plugs and appliance connectors.
- Check the cleanliness and condition of any ventilation fan filters.
- Check that the mains supply switch isolates the equipment from the supply.
- Check the supply indicator functions (if fitted).

If any defect is noted this should be rectified before proceeding with the following electrical tests.

2. Earth bonding tests

Earth bonding tests should be carried out using a 25A (12V maximum open circuit voltage) DC source. Tests should be limited to a maximum duration of 5 seconds and have a pass limit of 0.1 Ω after allowing for the resistance of the supply lead. Exceeding the test duration can cause damage to the equipment. The tests should be carried out between the supply earth and exposed case metalwork, no attempt should be made to perform the tests on functional earths (e.g. signal carrying connector shells or screen connections) as this will result in damage to the equipment.

3. Insulation tests

A 500 VDC test should be applied between the protective earth connection and combined live and neutral supply connections with the equipment supply switch in the 'on' position. It is advisable to make the live/neutral link on the appliance tester or its connector to avoid the possibility of returning the equipment to the user with the live and neutral poles linked with an ad-hoc strap. The test voltage should be applied for 5 seconds before taking the measurement.

Marconi Instruments Ltd., employ reinforced insulation in the construction of their products and hence a minimum pass limit of 7 MΩ should be achieved during this test.

Where a DC power adapter is provided with the equipment the adapter must pass the 7 MΩ test limit.

We do not recommend dielectric flash testing during routine safety tests. Most portable appliance testers use AC for the dielectric strength test which can cause damage to the supply input filter capacitors.

4. Rectification

It is recommended that the results from the above tests are recorded and checked during each repeat test. Significant differences between the previous readings and measured values should be investigated.

If any failure is detected during the above visual inspection or tests, the equipment should be disabled and the fault should be rectified by an experienced Service Engineer who is familiar with the hazards involved in carrying out such repairs.

Safety critical components should only be replaced with equivalent parts, using techniques and procedures recommended by Marconi Instruments Ltd.

The above information is provided for guidance only. Marconi Instruments Ltd. design and construct their products in accordance with International Safety Standards such that in normal use they represent no hazard to the operator. Marconi Instruments Ltd. reserve the right to amend the above information in the course of continuing its commitment to product safety.

Cleaning

Before commencing any cleaning, switch off the equipment and disconnect it from the supply. The exterior surface of the case may be cleaned using a soft cloth moistened in water. Do not use aerosol or liquid solvent cleaners.

LCD

If the display surface of the LCD becomes soiled, breathe on the surface and wipe gently with a clean, soft cloth. If this is not sufficient to clean the display, moisten the cloth with either Isopropyl Alcohol or Ethyl Alcohol, then wipe gently. Observe appropriate safety regulations when using these solvents.

Note **Do not use any solvents other than these, as damage to the display could result. DO NOT USE: Water; Ketone; or Aromatic solvents.**

Ventilation fan and filter

(This information is also printed in Chapter 2 of the operating manual).

The ventilator fan on the rear of the Service Monitor is fitted with a filter to prevent the ingress of foreign matter into the it. This should be inspected and cleaned at regular intervals. The procedure for this is as follows:-

Disconnect the Service Monitor from the mains supply and from any DC supply.

Remove any other connections to the Service Monitor.

WARNING **Failing to disconnect the power source before removing the filter could result in the fan becoming switched on accidentally.**

Stand the Service Monitor face down on a firm, non-scratch flat surface so that it is supported on the front handles.† The rear of the Service Monitor, with the fan housing, should be at a safe and accessible working height.

Remove the two M4 screws holding the fan filter to the rear of the Service Monitor and lift the filter away.

Take the filter to a suitably ventilated location and remove as much dust and other foreign matter as is practical. Do not wet or wash the filter.

Refit the filter to the Service Monitor, using the reverse procedure as appropriate.

If the filter is damaged or blocked, a replacement is available as MI part No. 35907-675.

†. If the bail arm carrying handle has been fitted, this should be positioned over the top of the Service Monitor before standing the instrument face down, supported on the front bumpers.

Chapter 3
ADJUSTMENT AND CALIBRATION

Contents

Introduction 3-2
Test equipment required 3-2
Warm-up time 3-2
Unlocking the diagnostics and calibration menus 3-2
Preliminary key press sequences 3-2
B1, B1/1, B1/2 Audio processor board 3-3
Audio generator output level 3-3
Voltmeter and Oscilloscope DC offsets and Oscilloscope sensitivity 3-4
Voltmeter DC Offsets and Voltmeter sensitivity 3-4
SINAD / Distortion Meter 1 kHz notch set up 3-5
Microphone amplifier level gain 3-5
Signal generator level reference 3-5
Modulation meter AM 3-5
Modulation meter FM 3-6
RF Tray Adjustments 3-6
A9 2nd & 3rd local oscillator 3-6
A10 90 MHz swept local oscillator 3-6
A2 Input mixer 3-7
A3 2nd & 3rd mixer 3-7
A4 10.7 MHz IF and Log Amp Board 3-8
A4/1 10.7 MHz IF and Log Amp Board 3-10
A12 Duplex mixer 3-13
A15 SSB option board 3-13
Software calibrations 3-14
Introduction 3-14
Service Monitor internal 10 MHz reference standard adjustment 3-14
Signal generator RF output level calibration 3-14
Signal generator AM calibration 3-17
Signal generator FM calibration 3-17
Broadband power meter calibration 3-18
Narrowband power meter calibration 3-19
Module Replacement and Re-calibration 3-20
Adjustments 3-21
Calibrations 3-21
Microprocessor board replacement 3-21

List of figures

Fig. 3 1 B1, B1/1 and B1/2 adjustments and test points. 3-3
Fig. 3-2 Recommended equipment set-up for broadband power meter calibration 3-18

Introduction

This chapter describes adjustments which will restore the Service Monitor to its peak operating condition. Test equipment recommended for this purpose is listed below. The Service Monitor being adjusted is referred to by the initials UUT (Unit Under Test).

The procedures contain information to cover the service monitors 2945, 2946, 2945A, 2946A and 2948. As the composition of the different Service Monitors varies, some of the adjustable components may not be present. For the 2948, some calibrations use different settings to those used on the other Service Monitors. Alternative settings are given where appropriate.

Test equipment required

During the adjustment of the instrument ensure that all the test equipment used is calibrated. Correction figures should be applied where necessary and instruments zeroed if required.

Description	Example
DVM	Solartron 7150+
Oscilloscope	Any general purpose instrument
Signal generator	Marconi Instruments 2019
Modulation meter	Marconi Instruments 2305
Spectrum analyzer	Marconi Instruments 2383
Zero loss probe	Marconi Instruments 2388
50 Ω adapter	
RF power meter.	Marconi Instruments 6960 with 6920 sensor and 6912 sensor.

Warm-up time

Apply power to the Service Monitor for 30 minutes to allow it to reach operating temperature, before commencing these adjustment procedures.

Unlocking the diagnostics and calibration menus

A number of the adjustments require access to the calibration or diagnostics screens. These are normally locked but can be unlocked to allow service access. The locking is re-applied when the Service Monitor is powered down. To gain access to the calibration or diagnostics screens, proceed as follows.

Press the [HELP SETUP] key. If the message Locked appears adjacent to the *[Calibrate]* and *[Diagnostic]* keys, they must be unlocked before access can be obtained.

Press *[Diagnostic]* or *[Calibrate]*. The message ENTRY CODE: will appear.

Key in the digits 2, 9, 4 and 5 , and then press the [dBm/ENTER] key. If the procedure has been carried out correctly the Locked message will be removed, and the *[Calibrate]*and *[Diagnostic]* keys will now be active.

Preliminary key press sequences

Each adjustment procedure which requires access to the diagnostic or calibrate menus, shows the full key press sequence commencing with the [HELP/SETUP] key. If adjustment instructions are followed consecutively, a diagnostic or calibrate menu will continue to be displayed and there will be no need to use the full key press sequence. To clarify the instructions for engineers making individual adjustments, the preliminary key press sequence is shown inside braces, { }. When making consecutive adjustments ignore the braced sequence.

B1, B1/1, B1/2 Audio processor board

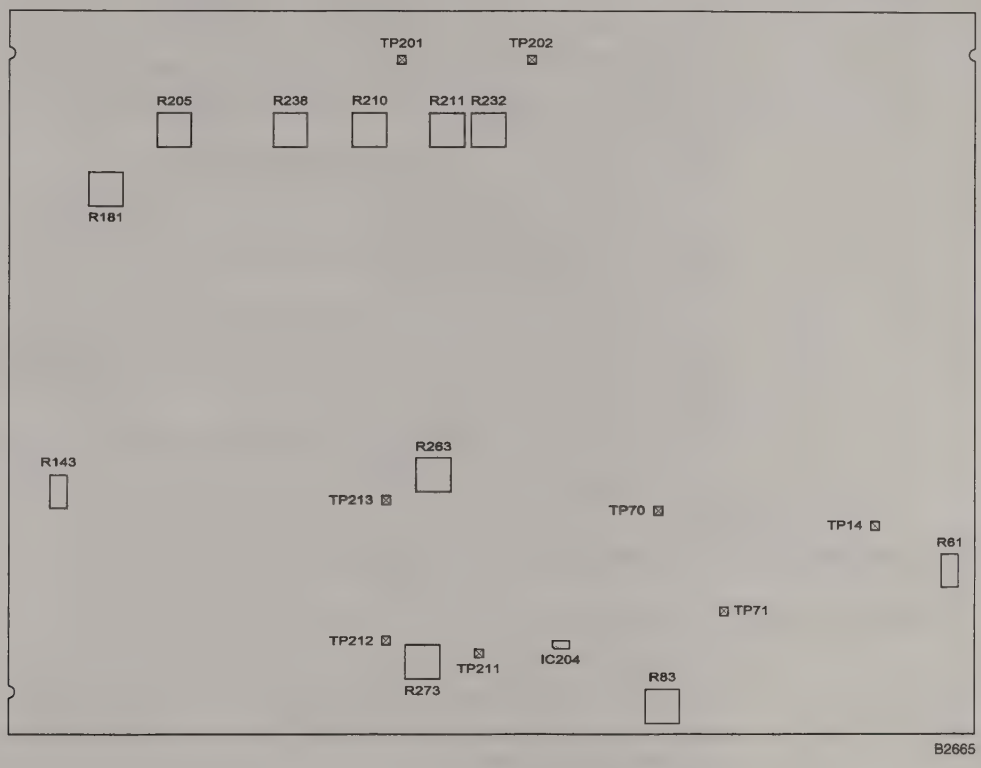

Fig. 3 1 B1, B1/1 and B1/2 adjustments and test points.

Notes

Interactive adjustments

Most of the adjustments on this board are interactive. If adjustment needs to be made, it is recommended that the procedure for the full board is carried out. The signal generator output level adjustment R61, is not interactive with other adjustments.

600 Ω interface

If the 600 Ω interface option is fitted, set the Audio Input Impedance to High, the Audio Output Impedance to Low, and the 20 dB Audio Attenuator to 0 dB, by using the appropriate soft keys on setup page 2.

Audio generator output level

(R2)

See note above regarding 600 Ω interface option.

1. Press [HELP/SETUP], *[Diagnostic]*, *[B1 Setup]*, *[AF Level]*. This calls up an Audio Generator output setting of 1 kHz sine wave, at 1 V.
2. Monitor the AF GEN OUT socket on the front panel, using a DVM set to monitor AC Volts
3. Adjust R2 for a DVM reading of 1.000 V ±2 mV RMS.

Voltmeter and Oscilloscope DC offsets and Oscilloscope sensitivity

(R205, R211, R210)

See note above regarding 600 Ω interface option.

1. Press {[HELP/SETUP], *[Diagnostic], [B1 Setup],*} *[Scope/VM], [IC200 Offset].*
2. Short circuit the centre and outer connections of the front panel AF INPUT socket, using a BNC short circuit termination.
3. Monitor TP200, using a DVM set to monitor DC Volts.
4. Adjust R205 for 0 mV ±0.2 mV DC.
5. Press *[IC201 Offset],* and monitor TP201 using a DVM set to monitor DC Volts.
6. Adjust R211 for 0 mV ±0.5 mV DC
7. Remove the short circuit from the AF INPUT socket.
8. Press *[Scope Sens]* and connect the front panel AF GEN OUT to AF INPUT, using a suitable connecting lead. The UUT AF Generator will now be supplying a signal of 1.06 V RMS at 1 kHz to the AF INPUT socket.
9. Monitor TP210 (PLB10 ,IC204 pin 7) using a DVM set to monitor AC Volts.
10. Adjust R210 to give 1.768 V RMS ±3 mV

Voltmeter DC Offsets and Voltmeter sensitivity

(R232, R238, R269)

See note above regarding 600 Ω interface option.

1. Press {[HELP/SETUP], *[Diagnostic], [B1 Setup], [Scope/VM]], [IC205 Offset].*
2. Short circuit the centre and outer connections of the front panel AF INPUT socket, using a BNC short circuit termination.
3. Monitor TP202, using a DVM set to monitor DC Volts
4. Adjust R232 for 0 mV ±0.5 mV DC.
5. Remove the short circuit from the AF INPUT.
6. Press either *[Vm sens 15kHzLP] or [Vm sens 3kHzLP].* Only 1 choice will be available, the *[Vm sens 15kHzLP*] if the instrument contains a B1 board, the *[Vm sens 3kHzLP]*if a B1/1 or B1/2 board is fitted. Connect the front panel AF GEN OUT socket to the AF INPUT socket, using a suitable connecting lead. The UUT AF Generator will now be supplying a signal of 1.25 V RMS at 1 kHz to AF INPUT.
7. Monitor TP211, using a DVM set to monitor AC Volts
8. Adjust R238 for 4.883 V RMS ±10 mV.
9. Press *[Vm sens 50kHzLP].* Using a DVM, check that the signal level at TP211 is within 4.883 V ±100 mV RMS.
   Steps 10, 11 and 12 are applicable only to Service Monitors fitted with B1 boards.
10. Press *[Speech Gain].* The UUT AF Generator will now be supplying a signal of 1.25 V RMS at 1 kHz to AF INPUT.
11. Monitor TP211, using a DVM set to monitor AC Volts
12. Adjust R269 for 4.883 V ±10 mV.

SINAD / Distortion Meter 1 kHz notch set up

(R263, R273)

See note above regarding 600 Ω interface option.

1. Press { [HELP/SETUP], *[Diagnostic]*, *[B1 Setup]*, *[Scope/VM]* } *[Sinad]*.
2. Connect the front panel AF GEN OUT socket to the AF INPUT socket using a suitable connecting lead. The UUT AF Generator will now be supplying a signal of 1.25 V RMS at 1 kHz to AF INPUT.
3. Turn R263 fully counter-clockwise.
4. Using an oscilloscope, monitor TP213 and adjust R273 for a minimum 1 kHz signal on the oscilloscope.
5. Using an oscilloscope monitor TP212 and adjust R263 for a minimum 1 kHz signal on the oscilloscope.

Microphone amplifier level gain

(R83)

See note above regarding 600 Ω interface option.

1. Press ,{ [HELP/SETUP], *[Diagnostic]*, *[B1 Setup]* }, **[Return]*,*[MIC Level]*. (* The *[Return]* key should be pressed when making consecutive adjustments.)
2. Connect AF GEN OUT to PLJ1 (GND to PLJ3). The UUT AF GEN will now be supplying a signal of 100 mV RMS at 1 kHz to PLJ1.
3. Using a DVM set to monitor AC Volts, check that the signal level at TP70 is between 60 and 140 mV RMS.
4. Transfer the DVM to monitor TP71
5. Adjust R83 for 1.00 V RMS ±10 mV

Signal generator level reference

(R61)

This is an initial adjustment, which should only be necessary when the board is first fitted. The final adjustment of R61 is set during the signal generator output level calibration.

1. Press { [HELP/SETUP], *[Diagnostic]*, *[B1 Setup]* }, *[RF Level]*. This switches on the modulation generator, set to a frequency of 1 kHz at 0% depth.
2. Monitor TP14, using a DVM set to monitor DC Volts
3. Adjust R61 for -4.50 V ±10 mV DC.

Modulation meter AM

(R143)

1. Recall the UUT factory settings by pressing the [MEM] key, and then recalling memory 01.
2. Select [TX TEST] and press the [SELECT] key to select the ANTENNA input.
3. Press *[TX FREQ]*, 100 MHz, *[Return]*, *[MOD METER]* then press *[A.M./F.M.]*(or *[AM/FM/SSB]* if the SSB decode option is fitted) to select AM. The 30 kHz I.F. filter and the 0.3 to 3.4 kHz AF filter should already be selected from power on. If this is not the case, then select them.
4. Set an external signal generator to provide a 100 MHz, 0 dBm signal, with 50% AM at a 1 kHz modulation rate.
5. Connect this to an external modulation meter set to measure AM (The AM measurement accuracy should be 1% or better e.g. Marconi Instruments 2305). Note the reading on the external modulation meter.

6. Transfer the signal generator output from the external modulation meter to the ANTENNA input of the UUT
7. Adjust R143 so that the UUT modulation meter AM reading is the same as that noted on the calibrated modulation meter.

Modulation meter FM

(R181)

1. Recall the UUT factory settings by pressing the [MEM] key, and then recalling memory 01.
2. Select [TX TEST] and press the [SELECT] key to select the ANTENNA input.
3. Press *[TX FREQ]*, 100 MHz. The UUT modulation meter should already be set to demodulate FM, with the 30 kHz IF filter and the 0.3 to 3.4 kHz AF filter selected from power on. If this is not the case, then select them.
4. Set an external signal generator to provide a 100 MHz, 0 dBm signal, with 25 kHz FM. at a 1 kHz modulation rate.
5. Connect this to an external modulation meter set to measure FM (The FM measurement accuracy of the external modulation meter should be 0.5% or better e.g. Marconi Instruments 2305). Note the reading on the external modulation meter.
6. Connect the signal generator to the ANTENNA input of the UUT.
7. Adjust R181 so that the UUT modulation meter FM reading is the same as that noted on the external modulation meter.

RF Tray Adjustments

A9 2nd & 3rd local oscillator

(L5)

1. Monitor TP20 on A9 board using an oscilloscope.
2. Adjust L5 for 5.5 V DC.
3. Using a zero loss probe, connect a spectrum analyzer (tuned to 90 MHz with a 5 kHz span/div selected) to connector PLD on A9. Check for a 90 MHz signal at -10 dBm ±2 dB.

A10 90 MHz swept local oscillator

(L1)

The following adjustment must be made with the RF tray lid in position. As it is necessary to monitor a test point under the lid, a temporary extension must be made to the test point. This should be made from a piece of insulated wire, approximately 6 cm long, with a Berg socket on one end to connect to the test point, and the other end prepared suitably for connection of the test equipment described below.

1. Remove the RF lid.
2. Unscrew L1 core until it is flush with the top of the former.
3. Attach the extension wire to TP3. (On very early boards TP3 did not exist. In this case attach the wire to IC1 pin 7.) Route the wire through the hole in the RF lid for L1 adjustment and place the RF lid back in position. (One or two screws holding the lid in position is sufficient).
4. Select [TX TEST].
5. Monitor the signal on the wire attached to TP3, using both an oscilloscope and a DVM, setting the DVM to monitor DC.

6. Slowly advance L1 adjuster, observing the waveform on TP3. The frequency should decrease and finally become zero as A10 locks to the 90 MHz 3rd local oscillator. Note the DVM reading V^1, which corresponds to the upper frequency capture limit.
7. Continue advancing L1 adjuster until lock is lost as the DVM reading increases further. (It should be noted that on early boards it may be found that the DVM reading starts to **decrease** before lock is lost. If this occurs, set L1 so that the DVM reads (V^1) + 0.5 V, and ignore the rest of this L1 procedure).
8. Slowly unscrew L1 adjuster, observing TP3 waveform frequency decreasing, until lock is regained when the frequency becomes zero.
9. Make a note of the DVM reading, V^2, which corresponds to the lower frequency capture limit.
10. Adjust L1 so that TP3 voltage is the mean. i.e. ½ (V^1+V^2). The oscillator should now have locked to 90 MHz, in the middle of its capture range.

A2 Input mixer

(C13, C17)

Trimmer capacitors are only fitted in the C13 & C17 positions on early issues of this board On later units there are no adjustments available as the trimmer capacitors have been replaced with fixed capacitors. When adjusting Service Monitors fitted with an early issue board that contains these adjustments, the trimmers should be adjusted until the internal adjusting lug is flush with the top of the trimmers outer case.

A3 2nd & 3rd mixer

(C1,C35,L2,L3,L4)

1. Recall the UUT factory settings by pressing the [MEM] key, and then recalling memory 01.
2. Select [SPEC ANA] and press *[Centre Freq],* 100 MHz, *[Span],* 1 kHz, *[REF LEVEL],* 0 dBm, then press [SELECT] to select the ANTENNA input.
3. Connect a signal generator, set to provide 100 MHz at 0 dBm, to the ANTENNA input socket.
4. Tune the external spectrum analyzer to 10.7 MHz with a reference level of 0 dBm , 1 dB/div, span 100 kHz/div, resolution bandwidth 300 kHz.
5. Using a zero loss probe (e.g. Marconi 2388) with the external spectrum analyzer, monitor PLD.
6. Adjust C1 & C35 for a maximum signal level as seen on the spectrum analyzer.
7. Change the signal generator frequency to 78.6 MHz and set its level to +10 dBm
8. Set the external spectrum analyzer to a reference frequency of 100.7 MHz, Span 2 kHz/div, 10 dB/div, resolution bandwidth 1 kHz, no input attenuation.
9. Monitor TP2 and adjust L2 to minimise the 100.7 MHz signal as seen on the spectrum analyzer.
10. Change the signal generator frequency to 94.65 MHz.
11. Set the external spectrum analyzer to a reference frequency of 84.65 MHz, Reference level -50 dBm, 1 dB/div.
12. Adjust L3 to minimise the 84.65 MHz signal on TP2.
13. Change the signal generator frequency to 105.35 MHz.
14. Set the external spectrum analyzer to a reference frequency of 73.95 MHz, Reference level -60 dBm.
15. Adjust L4 to minimise the 73.95 MHz signal on TP2.

A4 10.7 MHz IF and Log Amp Board

(C17, C27, C45, C55, C21, C31, C49, C59, C101, R4, R31, R42, R55, R64, R75, R150, R119, R122)

1. Access the NB POWER METER CAL screen on the UUT by using the key sequence [HELP SETUP], *[Calibrate], [NB pwr Mtr].* Reset the narrowband calibration figures by pressing the [Reset Cal] key, but do not store them.
2. Set the UUT to [SPEC ANA], RF input [SELECT] to antenna in, *[Span],* [1 kHz], *[Centre Freq],* [100 MHz], *[Ref Level],* [0 dBm], *[Res BW], [Manual Res BW],[3MHz].*
3. Set the external spectrum analyzer to 10.7 MHz, Ref level 20 dBm, 10 dB/div, 100 kHz span/div. (Set the 2388 low loss probe to have a 10 dB attenuation as follows. Connect the low loss probe to the spectrum analyzer tracking generator output, set the tracking generator ON and its level to -10 dBm. Adjust the probe for a reading of -20 dBm on the external spectrum analyzer display.) Remove probe.
4. Set the external signal generator to 10.7 MHz at an RF level of -6 dBm.
5. Remove the lead connected to PLA on A4 and connect the signal generator to PLA.
6. Using the 2388 probe and ensuring a good earth connection monitor the level applied at PLA and adjust the signal generator output level until the external spectrum analyzer display indicates -12 dBm ± 0.2 dB at PLA. (The actual level is -2 dB, but taking into account the 10 dB of attenuation of the probe the displayed level is -12 dBm). In other words, for clarity, all levels given for the external spectrum analyzer display are those that will actually be seen on the display with the probe attenuation set as stated.
7. Transfer the probe to A4 TP8 and adjust R4 for a reading of 0.0 dBm ± 0.1 dB as indicated on the external spectrum analyzer display.
8. Disconnect the signal generator from PLA.
9. Set the UUT resolution bandwidth to *[300Hz].*
10. Connect the external spectrum analyzer tracking generator output to PLA. Set the external spectrum analyzer to 0 dBm ref level, 0.5 dB/div, zero span.
11. Monitor TP8 with the low loss probe. Adjust C17, C27, C45 and C55 for maximum level on the external spectrum analyzer. The level must be greater than -5 dBm.(The trace should be a horizontal line, but may initially be off the screen. If necessary adjust the external spectrum analyzer ref level control to bring the trace into view.)
12. Set the external spectrum analyzer to -20 dBm ref level, 10 dB/div, 1 MHz/div span. Connect the low loss probe to the tracking generator output and adjust the probe for -50 dBm on the external spectrum analyzer display (40 dB attenuation). Remove probe.
13. Set the external spectrum analyzer to -30 dBm reference level, 2 dB/div, 100 kHz/div span. Connect the tracking generator output to PLA.
14. Set the UUT resolution bandwidth to *[30kHz].*
15. Connect the low loss probe to TP4. Adjust C21 and R31 for best centralisation and symmetry (the adjustments interact). Alterations may need to be made to the external analyzer settings to facilitate making these adjustments.
16. Set the UUT resolution bandwidth to *[300Hz].*
17. Set the external spectrum analyzer to a 200 Hz/div span and 0.5 dB/div and finally adjust C17 until the response is accurately tuned to 10.7 MHz
18. Set the UUT resolution bandwidth to *[30kHz].* Set the external spectrum analyzer to a 100 kHz/div span and 5 dB/div.
19. Connect the low loss probe to TP5. Adjust C31 and R42 for best centralisation and symmetry (the adjustments interact). Alterations may need to be made to the external analyzer settings to facilitate making these adjustments.

20. Set the UUT resolution bandwidth to *[300Hz]*. Set the external spectrum analyzer to a Ref level of -34 dBm.
21. Set the external spectrum analyzer to a 200 Hz/div span and 0.5 dB/div, finally adjust C27 until the response is accurately tuned to 10.7 MHz.
22. Set the UUT resolution bandwidth to *[30kHz]*. Set the external spectrum analyzer to a Ref level of -20 dBm, 5 dB/div and 50 kHz/div span.
23. Connect the low loss probe to TP6. Adjust C49 and R64 for best centralisation and symmetry (the adjustments interact). Alterations may need to be made to the external analyzer settings to facilitate making these adjustments.
24. Set the UUT resolution bandwidth to *[300Hz]*.
25. Set the external spectrum analyzer to a 200 Hz/div span, 0.5 dB/div and a Ref level of -27 dBm finally adjust C45 until the response is accurately tuned to 10.7 MHz.
26. Set the UUT resolution bandwidth to *[30kHz]*. Set the external spectrum analyzer to 10 dB/div and 100 kHz/div span.
27. Connect the low loss probe to TP7. Adjust C59 and R75 for best centralisation and symmetry (the adjustments interact). Alterations may need to be made to the external analyzer settings to facilitate making these adjustments.
28. Set the UUT resolution bandwidth to *[300Hz]*. Set the external spectrum analyzer to a Ref level of -28 dBm.
29. Set the external spectrum analyzer to a 200 Hz/div span and 0.5 dB/div, finally adjust C55 until the response is accurately tuned to 10.7 MHz.
30. Set the external spectrum analyzer to -17.5 dBm ref level, 0.5 dB/div, 100 kHz/div span. Connect the low loss probe to the tracking generator output and adjust the probe for -20 dBm on the external spectrum analyzer display (10 dB attenuation). Remove probe.
31. Set the external signal generator to 10.7 MHz at an RF level of -10 dBm and connect this to PLA in place of the tracking generator.
32. Set the UUT resolution bandwidth to *[3MHz]*.
33. Connect the low loss probe to TP9. Adjust C101 for maximum level on the external spectrum analyzer (nominally-42 dBm). The ref level control on the external spectrum analyzer may need to be adjusted to move the peak of the signal onto the screen.
34. Make a note of the level achieved with the UUT 3 MHz resolution bandwidth selected and then step through the 300 kHz, 30 kHz, 3 kHz and 300 Hz filters in turn checking that the level at TP9 does not vary by more than ±1.5 dB from that measured with the 3 MHz bandwidth selected. If the 300 Hz filter is > 1.5 dB higher than the 3 MHz level, increase the value of R55 if it is > 1.5 dB lower then decrease the value of R55
35. Set the UUT resolution bandwidth to *[300Hz]* and set R150 fully clockwise.
36. Set the external spectrum analyzer to reference level -20 dBm, span 100 kHz, 2 dB/div. Connect the low loss probe to the tracking generator output and adjust the probe to give -30 dBm on the external spectrum analyzer display (20 dB attenuation). Remove probe.
37. Set the external signal generator to provide 10.7 MHz at -7 dBm and connect to PLA.
38. Set the external spectrum analyzer to -20 dBm reference level, 2 dB/div.
39. Monitor PLA using the low loss probe and adjust the external signal generator RF level until the external spectrum analyzer reads -22 dBm. Make a note of the signal generator level at this point (**REF X**).
40. Set the external spectrum analyzer reference level to -5 dB and transfer the low loss probe to TP8.
41. Adjust R4 for a reading of -10 dBm ±0.1 dB on the external spectrum analyzer.
42. Set the external signal generator RF level to (**REF X**) - 66.5 dB.

43. Adjust R119 for -66.5 dBm on the UUT. (use the marker facilities of the UUT spectrum analyzer to achieve best results).
44. Set the external signal generator level to (**REF X**) -21.5 dB.
45. Adjust R122 for -21.5 dBm on the UUT (use the marker facilities of the UUT spectrum analyzer to achieve best results).
46. Repeat steps 42, 43, 44 and 45, until both measurements are consecutively correct.
47. Set the external signal generator level to (**REF X**) and the UUT spectrum analyzer vertical scale to 2 dB/div. Adjust R150 for 0 dBm ±0.1 dB on the UUT. (use the marker facilities of the UUT spectrum analyzer to achieve best results).
48. Set the UUT spectrum analyzer vertical scale to 10 dB/div then step the signal generator down in 10 dB steps to (**REF X**) -70 dB noting at each step the alignment of the signal on the graticule lines of the display. Any linearity errors should be distributed evenly, if this is not the case then use R119, R122 and R150 to optimise. (Factory experience has shown that a good starting point is to set up the -40 dB and -50 dB points to have equal but opposite errors about their nominal values and adjusting the -20 dB point to be -19 dB).
49. Remove the signal generator from PLA and reconnect the lead from A3 board.
50. Access the NB POWER METER CAL screen on the UUT by using the key sequence [HELP SETUP], *[Calibrate], [NB pwr Mtr].* Use the arrow down key to highlight 25 MHz on the display.
51. Set the external signal generator to provide 25 MHz 0 dBm ± 0.1 dB. To ensure accuracy set the signal generator level against an external power meter.
52. Connect the signal generator to the N-Type input of the UUT, and adjust R4 for a reading of -1.5 dBm on the UUT. (The level is set low to ensure that the absolute levels can be set correctly under the narrowband software data correction menu as software corrections can only be made in one direction).

A4/1 10.7 MHz IF and Log Amp Board

(C17, C27, C45, C55, C21, C31, C49, C59, C101, R4, R31, R42, R55, R64, R75, R119, R122)

1. Access the NB POWER METER CAL screen on the UUT by using the key sequence [HELP SETUP], *[Calibrate], [NB pwr Mtr].* Reset the narrowband calibration figures by pressing the [Reset Cal] key, but do not store them.
2. Set the UUT to [SPEC ANA], RF input [SELECT] to antenna in, *[Span],* [1 kHz], *[Centre Freq],* [100 MHz], *[Ref Level],* [0 dBm], *[Res BW], [Manual Res BW],[3MHz].*
3. Set the external spectrum analyzer to 10.7 MHz, Ref level 20 dBm, 10 dB/div, 100 kHz span/div. (Set the 2388 low loss probe to have a 10 dB attenuation as follows. Connect the low loss probe to the spectrum analyzer tracking generator output, set the tracking generator ON and its level to -10 dBm. Adjust the probe for a reading of -20 dBm on the external spectrum analyzer display.) Remove probe.
4. Set the external signal generator to 10.7 MHz at an RF level of -6 dBm.
5. Remove the lead connected to PLA on A4/1 and connect the signal generator to PLA.
6. Using the 2388 probe and ensuring a good earth connection monitor the level applied at PLA and adjust the signal generator output level until the external spectrum analyzer display indicates -12 dBm ± 0.2 dB at PLA. (The actual level is -2 dB, but taking into account the 10 dB of attenuation of the probe the displayed level is -12 dBm). In other words, for clarity, all levels given for the external spectrum analyzer display are those that will actually be seen on the display with the probe attenuation set as stated.
7. Transfer the probe to A4/1 TP8 and adjust R4 for a reading of -2.0 dBm ± 0.1 dB as indicated on the external spectrum analyzer display.

8. Disconnect the signal generator from PLA.
9. Set the UUT resolution bandwidth to *[300Hz]*.
10. Connect the external spectrum analyzer tracking generator output to PLA. Set the external spectrum analyzer to -2 dBm ref level, 0.5 dB/div, zero span.
11. Monitor TP8 with the low loss probe. Adjust C17, C27, C45 and C55 for maximum level on the external spectrum analyzer. The level must be greater than -7 dBm.(The trace should be a horizontal line, but may initially be off the screen. If necessary adjust the external spectrum analyzer ref level control to bring the trace into view.)
12. Set the external spectrum analyzer to -20 dBm ref level, 10 dB/div, 1 MHz/div span. Connect the low loss probe to the tracking generator output and adjust the probe for -50 dBm on the external spectrum analyzer display (40 dB attenuation). Remove probe.
13. Set the external spectrum analyzer to -32 dBm reference level, 2 dB/div, 100 kHz/div span. Connect the tracking generator output to PLA.
14. Set the UUT resolution bandwidth to *[30kHz]*.
15. Connect the low loss probe to TP4. Adjust C21 and R31 for best centralisation and symmetry (the adjustments interact). Alterations may need to be made to the external analyzer settings to facilitate making these adjustments.
16. Set the UUT resolution bandwidth to *[300Hz]*.
17. Set the external spectrum analyzer to a 200 Hz/div span and 0.5 dB/div and finally adjust C17 until the response is accurately tuned to 10.7 MHz
18. Set the UUT resolution bandwidth to *[30kHz]*. Set the external spectrum analyzer to a 100 kHz/div span and 5 dB/div.
19. Connect the low loss probe to TP5. Adjust C31 and R42 for best centralisation and symmetry (the adjustments interact). Alterations may need to be made to the external analyzer settings to facilitate making these adjustments.
20. Set the UUT resolution bandwidth to *[300Hz]*. Set the external spectrum analyzer to a Ref level of -36 dBm.
21. Set the external spectrum analyzer to a 200 Hz/div span and 0.5 dB/div, finally adjust C27 until the response is accurately tuned to 10.7 MHz.
22. Set the UUT resolution bandwidth to *[30kHz]*. Set the external spectrum analyzer to a Ref level of -20 dBm, 5 dB/div and 50 kHz/div span.
23. Connect the low loss probe to TP6. Adjust C49 and R64 for best centralisation and symmetry (the adjustments interact). Alterations may need to be made to the external analyzer settings to facilitate making these adjustments.
24. Set the UUT resolution bandwidth to *[300Hz]*.
25. Set the external spectrum analyzer settings to 200 Hz/div span, 0.5 dB/div and to a Ref level of -29 dBm finally adjust C45 until the response is accurately tuned to 10.7 MHz.
26. Set the UUT resolution bandwidth to *[30kHz]*. Set the external spectrum analyzer to 10 dB/div and 100 kHz/div span.
27. Connect the low loss probe to TP7. Adjust C59 and R75 for best centralisation and symmetry (the adjustments interact). Alterations may need to be made to the external analyzer settings to facilitate making these adjustments.
28. Set the UUT resolution bandwidth to *[300Hz]*. Set the external spectrum analyzer to a Ref level of -30 dBm.
29. Set the external spectrum analyzer to a 200 Hz/div span and 0.5 dB/div, finally adjust C55 until the response is accurately tuned to 10.7 MHz.

30. Set the external spectrum analyzer to -17.5 dBm ref level, 0.5 dB/div, 100 kHz/div span. Connect the low loss probe to the tracking generator output and adjust the probe for -20 dBm on the external spectrum analyzer display (10 dB attenuation). Remove probe.
31. Set the external signal generator to 10.7 MHz at an RF level of -10 dBm and connect this to PLA in place of the tracking generator.
32. Set the UUT resolution bandwidth to *[3MHz]*.
33. Connect the low loss probe to IC4 pin 16. Adjust C101 for maximum level on the external spectrum analyzer (nominally-4 dBm). The ref level control on the external spectrum analyzer may need to be adjusted to move the peak of the signal onto the screen.
34. Make a note of the level achieved with the UUT 3 MHz resolution bandwidth selected and then step through the 300 kHz, 30 kHz, 3 kHz and 300 Hz filters in turn checking that the level at IC4 pin 16 does not vary by more than ±1.5 dB from that measured with the 3 MHz bandwidth selected. If the 300 Hz filter is > 1.5 dB higher than the 3 MHz level, increase the value of R55 if it is > 1.5 dB lower then decrease the value of R55
35. Set the external spectrum analyzer to reference level -20 dBm, span 100 kHz, 2 dB/div. Connect the low loss probe to the tracking generator output and adjust the probe to give -30 dBm on the external spectrum analyzer display (20 dB attenuation). Remove probe.
36. Set the external signal generator to provide 10.7 MHz at -7 dBm and connect to PLA.
37. Set the external spectrum analyzer to -20 dBm reference level, 2 dB/div.
38. Monitor PLA using the low loss probe and adjust the external signal generator RF level until the external spectrum analyzer reads -22 dBm. Make a note of the signal generator level at this point (**REF X**).
39. Set the external spectrum analyzer reference level to -5 dB and transfer the low loss probe to TP8.
40. Adjust R4 for a reading of -12 dBm ±0.1 dB on the external spectrum analyzer.
41. Set the external signal generator RF level to (**REF X**) - 70 dB.
42. Adjust R119 for -70 dBm on the UUT. (use the marker facilities of the UUT spectrum analyzer to achieve best results).
43. Set the external signal generator level to (**REF X**).
44. Adjust R122 for 0 dBm on the UUT (use the marker facilities of the UUT spectrum analyzer to achieve best results).
45. Repeat steps 41, 42, 43 and 44 until both measurements are consecutively correct.
46. Set the UUT spectrum analyzer vertical scale to 10 dB/div then step the signal generator down in 10 dB steps to (**REF X**) -70 dB noting at each step the alignment of the signal on the graticule lines of the display. Any linearity errors should be distributed evenly, if this is not the case then use R119 and R122 to optimise.
47. Remove the signal generator from PLA and reconnect the lead from A3 board.
48. Access the NB POWER METER CAL screen on the UUT by using the key sequence [HELP SETUP], *[Calibrate]*, *[NB pwr Mtr]*. Use the arrow down key to highlight 25 MHz on the display.
49. Set the external signal generator to provide 25 MHz 0 dBm ± 0.1 dB. To ensure accuracy set the signal generator level against an external power meter.
50. Connect the signal generator to the N-Type input of the UUT, and adjust R4 for a reading of -1.5 dBm on the UUT. (The level is set low to ensure that the absolute levels can be set correctly under the narrowband software data correction menu as software corrections can only be made in one direction).

A12 Duplex mixer

(C5, C21)

Trimming capacitors C5 and C21 may not be fitted to some boards. Where these are fitted, they should be adjusted so that the internal adjusting lug is flush with the top of the trimmers outer case.

Some versions of the Service Monitor do not contain this board.

A15 SSB option board

(R24)

On the UUT, connect together the BNC RF output socket and ANTENNA socket, using a suitable connecting lead.

Select [RX TEST], and press the [SELECT] key to select BNC output and ANTENNA input.

Select *[RF GEN]*, [FREQ], 580 MHz, [LEVEL], –90 dBm.

Press *[MOD GEN]*, and set both modulation generators to OFF.

Select [TX TEST].

Select *[TX FREQ]*, 580 MHz, *[Return]*.

Press *[TxPower]*, then select narrowband power (Indicated by NB on the display) by pressing *[Broad/In Pwr]*.

Press *[Return]*, then use the *[Scope/Bar]* and *[Scope]* keys to show the oscilloscope display. Set the timebase to 500 µs, using the *[C]*and *[D]* keys.

Press *[Return]*, *[Mod Meter]*. Use the *[AM/FM/SSB]* key to select SSB Receiver demodulation.

Use the *[RS Sens]* key to select High Sens.

Check that the receiver section of the UUT is correctly tuned to the signal from the UUT RF generator. This is shown by the frequency offset indicating 0 Hz ±10 Hz, and an indicated power input of –90 dBm ±3 dB.

Press *[Return]*, *[Tx Freq]*, 580.001 MHz.

Turn the VOLUME control clockwise and check that a 1 kHz tone can be heard from the loudspeaker.

Observe the UUT oscilloscope display, and adjust R24 on A15 board until the sinusoidal waveform occupies 3 vertical divisions.

Select [RX TEST] mode.

Select *[RF Gen]*, [LEVEL], –50 dBm.

Reselect [TX TEST], and check that the trace on the oscilloscope display still occupies 3 vertical divisions.

Refit the RF cover and the instrument outer cover.

Software calibrations

Introduction

The software calibration facility provides for the correction of the calibration figures held within the Service Monitor which are called up by the software during normal use.

Software calibration is carried out from a set of calibration screens, which are accessed from Setup by pressing the *[Calibrate]* key. (Refer to 'Unlocking the calibration and diagnostics menus' earlier in this chapter).

Each calibration screen contains tables of calibration points and correction figures. The *[↑]* and *[↓]* keys are used to select specific calibration points. New calibration figures are entered during the software calibration routines. These new figures can be overwritten into the software by returning to the software calibration selection screen and pressing the *[Store Cal]* key.

There is a *[Reset Cal]* key on each calibration screen. Pressing this sets all the calibration points on the selected screen to a common datum. The calibration figures called up by pressing this key will only be retained if the *[Store Cal]* key is pressed. (See above).

The instructions for carrying out each of the software calibrations follows below.

Service Monitor internal 10 MHz reference standard adjustment

Note **Prior to carrying out this adjustment the UUT should have been allowed to warm up for at least 30 minutes.**

1. Press [HELP SETUP], *[Calibrate]*. If the *[calibrate]* key is locked refer to .'Unlocking the calibration and diagnostics menus, at the start of this chapter.'
2. Press *[Freq Std]* to enter the FREQ STANDARD CAL display.
3. Connect a signal generator set to provide 1000 MHz at 0 dBm, to the N-type RF connector. (The signal generator used should be locked to an external reference that has an accuracy of 1 part in 10^9 or better).
4. The offset reading at the bottom of the Service Monitor display will now indicate the instrument reading error at 1000 MHz.
5. Use the front panel variable control to alter the calibration value displayed, until the offset reading is as close to 0 Hz as possible. (The *[↑]* and *[↓]* keys switch between coarse and fine adjustment).
6. When the offset indication has been set to as close to 0 Hz as practical, press *[Return]*, *[Store Cal]*.

Signal generator RF output level calibration

The signal generator RF output level is calibrated by altering stored correction values within the calibration screens. There are three soft keys concerned with RF Level, *[Output Amp]*, *[Output Level]* and *[Attenuators]*. These are accessed by pressing [HELP SETUP], *[Calibrate]*. If the *[calibrate]* key is locked refer to .'Unlocking the calibration and diagnostics menus, at the start of this chapter.'

There is also a hardware adjustment, R61 on the B1 board, which sets the overall reference level for all of these software corrections.

When only minor adjustment is required , such as optimisation at specific frequencies, the relevant software corrections will usually provide sufficient without adjusting R61. However if extensive repairs are carried out on either A6 or B1 boards, then it is likely that R61 will need adjustment. This is described later in this chapter. If R61 is adjusted, all signal generator software calibrations, except the signal generator FM calibration, will need carrying out.

1: Press [HELP SETUP], *[Calibrate],.[Output level], [BNC output], [Reset Cal].*

2: Connect a power meter to the BNC output socket on the front panel.

3: Using the *[↑]* and *[↓]* keys to move the cursor, select each frequency in turn while monitoring the power meter and note the power reading. Select the frequency which has the lowest power output as displayed on the power meter.

Adjust R61 on B1 board, to set the power level at this frequency to +6 dBm ±0.1 dBm.

OUTPUT AMP

This is used to calibrate the scale shape of the pin diode attenuator on A6 board. There are eighteen calibration points , 0 to 17, corresponding to 0 to –17 dBr, which covers the pin diode attenuator range.

When the OUTPUT AMP CAL screen is selected, the signal generator is automatically configured to provide a 144 MHz signal at a nominal level from the BNC RF output socket. (Typically +8 dBm, with the 0 dBr calibration point highlighted) This first calibration point (0) has a fixed data value of 4095 and cannot be adjusted. It is used as the reference for the other calibration points.

1. Access the OUTPUT AMP CAL screen by using the key sequence, [HELP SETUP], *[Calibrate], [OUTPUT AMP].*
2. Connect a power meter (i.e. Marconi Instruments 6960 + 6912 sensor) to the BNC RF output socket.
3. Ensure that calibration point 0 dBr is highlighted. (The *[↑]* and *[↓]* keys are used to step up and down the table).
4. Make a note of the reading for the 0 dBr reference point. REFERENCE.
5. Using the *[↑]* and *[↓]* keys, step down to the -1 dBr calibration point.
6. Use the front panel variable control to alter the data value, until the power meter indicates 1 dB less than the REFERENCE. Repeat this process for the remaining calibration points, -2 dBr to be 2 dB lower than REFERENCE, -3 dBr to be 3 dB lower than REFERENCE.....etc.
7. When all calibration points have been set up, overwrite the previous figures by pressing the *[Return]* key, then *the [Store Cal key]* on the software calibration selection screen.

Output level

This is used to calibrate the output frequency response of the signal generator, for each of the three output configurations. These are: BNC output, N type output with ANTENNA selected for input, N type selected for output and for input (Single port).

There are 22 calibration points for each configuration. Calibration point 0 is at 10 MHz, Calibration point 1 is at 50 MHz. Thereafter calibration points are at 50 MHz intervals to 1050 MHz.

Each calibration point can be varied between 0 and 5 dB, with 0.1 dB resolution. As the calibration point value is increased, the output level is reduced by the same amount. The calibration points are adjusted to give an output level of 5 dBm on the BNC socket and -21 dBm on the N type socket.

1. Access the OUTPUT FLATNESS N CAL screen by using the key sequence, [HELP/SET-UP], *[Calibrate], [Output Level], [N out Ant in].*
2. Connect a power meter (i.e. Marconi Instruments 6960 + 6920 sensor) to the N type RF output socket.
3. Ensure that the 10 MHz calibration point is highlighted. (The *[↑] and [↓]* keys are used to step up and down the table).
4. Using the front panel rotary control, alter the data value until the power meter indicates –21.0 dBm. Repeat this process for the remaining frequencies.

5. Access the OUTPUT FLATNESS N N CAL screen by pressing the *[N out N in]* key.
6. Ensure that the 10 MHz calibration point is highlighted. (The *[↑] and [↓]* keys are used to step up and down the table).
7. Using the front panel rotary control, alter the data value until the power meter indicates –21.0 dBm. Repeat this process for the remaining frequencies.
8. Access the OUTPUT FLATNESS BNC CAL screen by pressing the *[BNC output]* key.
9. Connect a power meter (i.e. Marconi Instruments 6960 + 6912 sensor) to the BNC RF output socket.
10. Ensure that the 10 MHz calibration point is highlighted. (The *[↑] and [↓]* keys are used to step up and down the table).
11. Using the front panel rotary control, alter the data value until the power meter indicates 5.0 dBm. Repeat this process for the remaining frequencies.
12. When all calibration points have been set up, overwrite the previous figures by pressing the *[Return]* key, then *the [Store Cal key]* on the software calibration selection screen.

Attenuators

From this screen, the calibration and frequency response of the signal generator attenuator can be optimised. There are 22 calibration points for each of the 4 attenuator pads.

Calibration point 0 is at 10 MHz, Calibration point 1 is at 50 MHz. Thereafter calibration points are at 50 MHz intervals to 1050 MHz. The four attenuator pads are 10 dB, 20 dB and two 40 dB pads.

When the *[Attenuators]* key is pressed and the 10 dB PAD CAL screen is displayed the signal generator will provide a signal at the first calibration point frequency of 10 MHz. The attenuator pad can be switched in or out of circuit by pressing the *[Pad In/Out]* key, with the current state shown at the bottom of the display.

The calibration is performed using the N type socket and works in the following manner.:-

The pad is switched out of circuit and the RF output level is measured and noted. The pad is then switched into circuit and the RF output level is again measured and noted.

By comparing the actual reduction in output, with the expected reduction, the true value of attenuation is calculated. The change required to the correction figure is calculated, and the current figure adjusted accordingly.

It should be noted that altering the correction value does not alter the output level while in the calibration screen. The correction will not take affect until returning to normal operation.

1. Select [HELP SETUP], *[Calibrate]*, *[Attenuators]*.
2. Connect a power meter (i.e. Marconi Instruments 6960 + 6920 sensor) to the N type RF output socket.
3. With the 10 dB PAD CAL screen displayed, and the 10 MHz point highlighted, press the [Pad In/Out] key to set the pad state to OUT.
4. Note the power meter reading (e.g. -21.0 dBm).
5. Press the [Pad In/Out] key to set the pad state to IN.
6. Note the new power meter reading (e.g. -31.8 dBm.). Subtracting the first reading from the second, indicates that the 10 dB pad actually has an attenuation of 10.8 dB at 10 MHz instead of the required 10 dB. The correction figure should therefore be set to +0.8 dB to increase the signal level by this value when the 10 dB pad is switched in.
7. Using the front panel rotary control change the data value to the correction value calculated.
8. Repeat this process for each of the frequencies in the table. (The *[↑] and [↓]* keys are used to step up and down the table).

9. When all the frequencies in the table have been checked, and adjusted if necessary, the procedure should be repeated for the remaining three attenuator pads. The attenuation levels are 20, 40 and 40 dB respectively.

10. When all calibration points have been set up, overwrite the previous settings by pressing, the*[Return]* key, then the *[Store Cal]* key.

Signal generator AM calibration

This is used to calibrate the Signal Generator AM Depth. There are eighteen calibration points , 0 to 17 corresponding to 0 to -17 dBr to cover the scale shape of the pin diode attenuator on A6 board.

When the AM LEVEL CAL screen is selected, the signal generator is automatically configured to provide a 144 MHz signal with 70% AM at a nominal level (typically +8 dBm with the 0 dBr calibration point highlighted) from the BNC RF output socket.

1. [Access the AM LEVEL CAL screen by using the key sequence, [HELP/SET-UP], *[Calibrate]*, *[AM Level]*.

2. Connect an accurate modulation meter (i.e. Marconi Instruments 2305) to the BNC RF output socket. Set the external modulation meter to monitor AM in a 300 Hz to 3.4 kHz bandwidth.

3. Ensure that calibration point 0 dBr is highlighted. (The *[↑]* and *[↓]* keys are used to step up and down the table).

4. Using the front panel rotary control alter the data value until the external modulation meter indicates 70.0% AM.

5. Using the arrow softkeys step down to the next correction figure in the table and again alter the correction value until the external modulation meter indicates 70.0% AM.

6. Repeat for the remaining levels in the table.

7. When all calibration points have been set up, overwrite the previous figures by pressing the *[Return]* key, then the *[Store Cal key]* on the software calibration selection screen..

Signal generator FM calibration

Frequency modulation is applied to the signal generator of the Service Monitor using two methods.

At high modulation rates the signal generator oscillator is frequency modulated by applying the modulating signal directly onto the VCO. At low modulation rates the FM is achieved digitally by making use of the fractional-N system which is inherently accurate.

The FM calibration operates by first noting the deviation produced by a low modulation frequency (200 Hz) using the digital method. A higher modulation rate of 18 kHz is then selected (9 kHz for the 2948) and a correction figure is adjusted to calibrate this against the level produced by the more accurate digital method. The calibration is carried out with a deviation level of 100 kHz. There are 105 points to calibrate corresponding to 10 MHz to 1050 MHz in 10 MHz steps (75 points corresponding to 288 MHz to 576 MHz in 4 MHz steps for the 2948).

1. [Access the FM LEVEL CAL screen by using the key sequence, [HELP/SET-UP], *[Calibrate]*, *[FM Level]*.

2. Connect an accurate modulation meter (i.e. Marconi Instruments 2305) to the BNC RF output socket.

3. Set the modulation meter to monitor FM in a 30 Hz to 50 kHz bandwidth (The bandwidth chosen on the modulation meter used must be flat at both 200 Hz and 18 kHz/9 kHz).

4. Press the *[Mod Low/High]* key until Mod freq is Low is displayed at the bottom of the table.

5. Ensure that calibration point for 288 Mhz is highlighted. (The *[↑]* and *[↓]* keys are used to step up and down the table and the double arrowed keys to step to the next or previous band of frequencies). Ensure the modulation meter tunes to this frequency and note the deviation displayed. (This should be close to 100 kHz)

6. Toggle the *[Mod Low / High]* key until Mod freq is High is displayed at the bottom of the table. Using the front panel rotary control alter the data value until the modulation meter indicates the same deviation level as was noted for the LOW modulation frequency.
7. Toggle the *[Mod Low / High]* softkey to return to *Mod Freq LOW*.
8. Using the *[↑]* and *[↓]* keys step down to the next frequency in the table and repeat the process.
9. When all calibration points have been set up, overwrite the previous figures by pressing the *[Return]* key, then the *[Store Cal key]* on the software calibration selection screen..

Broadband power meter calibration

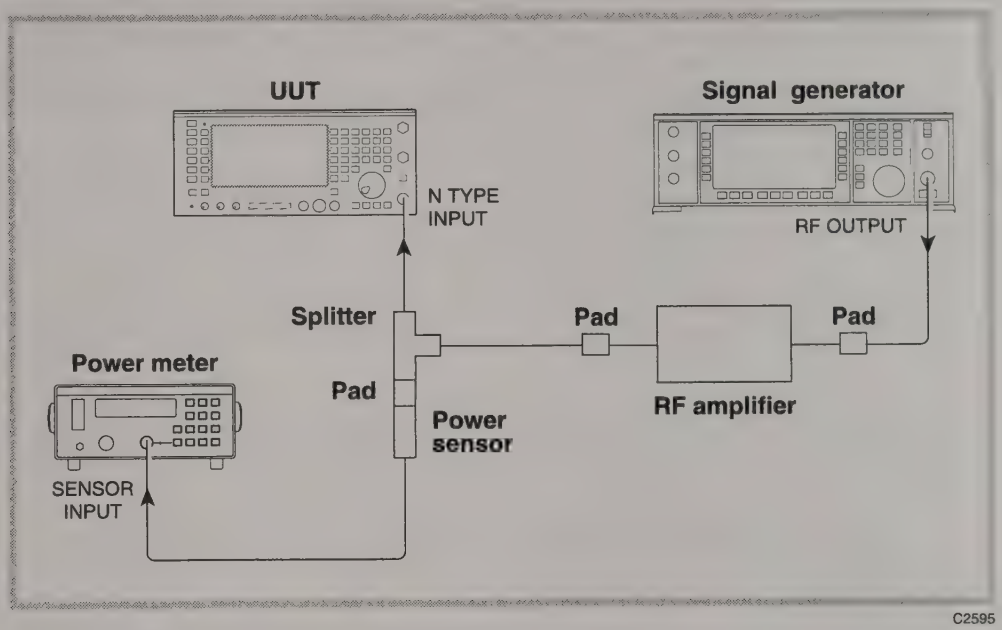

Fig. 3-2 Recommended equipment set-up for broadband power meter calibration

This is used to calibrate the frequency response of the Broadband Power Meter for each of the input configurations. In the 2 port duplex modes there are four groups of 22 points corresponding to the following instrument configurations:-

N-Type input	A11 input 10 dB pad switched out.
ANT input	A11 input 10 dB pad switched out.
N-Type input	A11 input 10 dB pad switched in.
ANT input	A11 input 10 dB pad switched in.

In the N-type 1 port duplex modes there are four groups of 22 points corresponding to the following instrument configurations:-

Input 10 dB pad in	Output 10 dB pad out
Input 10 dB pad in	Output 10 dB pad out
Input 10 dB pad out	Output 10 dB pad in
Input 10 dB pad in	Output 10 dB pad in

Calibration points correspond to 0 to 1050 MHz in 50 MHz steps. Calibration point 0 is at 10 MHz, Calibration point 1 is at 50 MHz. Thereafter calibration points are at 50 MHz intervals to 1050 MHz. Power measurement is corrected for the current point displayed. Adjust point until measurement and applied power correspond.

When setting up the broadband power meter a calibrated power source is required with an accuracy of better than 3.5% up to 500 MHz and 8.5% up to 1 GHz. It is important that the set-up is a calibrated system. Fig 3-2 shows the recommended equipment set-up for broadband power meter calibration.

Note

(a) The power meter/sensor , splitter and two pads associated with these items form the calibrated part of the source.

(b) The attenuator pad values are dependent upon the gain of the amplifier used. They should be chosen so that when the signal generator is set to its maximum output level the power arriving at the sensor is below +25 dBm i.e. not enough to damage the sensor.

1. Access the PWR MTR FLATNESS ANT CAL screen by using the [HELP/SET-UP], *[Calibrate], [2-port Pwr Mtr], [ANT input].*
2. Connect the calibrated power source, set to provide +6 dBm at 10 MHz to the antenna input socket of the UUT.
3. Ensure that the 10 MHz point is highlighted. .(The *[↑]* and *[↓]* keys are used to step up and down the table).
4. Note the power reading being displayed on the bottom of the UUT screen and using the front panel rotary control change the data value until the power reading on the UUT is the same as that being applied.
5. Repeat this process for the remaining frequencies in the screen table.
6. Select *[ANT no 10dB]* and repeat the above process except this time setting the power source to provide 0 dBm at each of the frequencies in the screen table.
7. Select *[N-type input]*, transfer the calibrated power source to the UUT N-Type socket and carry out the same process except this time setting the power source to provide +20 dBm at each of the frequencies in the screen table.
8. Select *[N-type no 10dB]* and repeat the process with the power source set to provide +20 dBm at each of the frequencies in the screen table.
9. Press *[Return], [Store Cal].*
10. Select *[1-port Pwr Mtr].*
11. Select *[0 In 0 out]* and repeat the process with the power source set to provide +20 dBm at each of the frequencies in the screen table.
12. Select *[10 In 0 out]* and repeat the process with the power source set to provide +20 dBm at each of the frequencies in the screen table.
13. Select *[0 In 10 out]* and repeat the process with the power source set to provide + 20 dBm at each of the frequencies in the screen table.
14. Select *[10 In 10 out]* and repeat the process with the power source set to provide +20 dBm at each of the frequencies in the screen table.
15. When all points have been set up press *[Return], [Store Cal].*

Narrowband power meter calibration

There are 41 calibration points for the N type input. Calibration point 0 is at 10 MHz, Calibration point 1 is at 25 MHz. Thereafter calibration points are at 25 MHz intervals to 1000 MHz. Calibration points from 10 MHz to 525 MHz are listed on one 2 column table, those from 550 MHz to 1000 MHz on a second table. When 525 MHz is selected, pressing the *[↓]* key will display the next table with 550 MHz selected. Similarly when 550 MHz is selected, pressing the *[↑] key* will display the previous table with 525 MHz selected.

Power measurement is corrected for the current calibration point displayed. Adjust the calibration point until measurement and applied power correspond.

To achieve optimum accuracy a calibrated power source should be used along similar lines to that shown in the broadband power meter calibration, except this time the amplifier is not required.

1. Select [HELP SETUP], *[Calibrate]*, *[NB pwr Mtr]*.
2. Connect the calibrated power source, set to provide 0 dBm at 10 MHz to the N type input socket of the UUT.
3. Ensure that the 10 MHz calibration point is highlighted. (The [↑] and [↓] keys are used to step up and down the table).
4. Note the power reading being displayed on the bottom of the UUT screen and using the front panel rotary control change the data value until the power reading on the UUT is the same as that being applied.
5. Repeat this process for the remaining frequencies in the screen table.
6. When all calibration points have been set up, overwrite the previous figures by pressing the *[Return]* key, then the *[Store Cal key]* on the software calibration selection screen..

Module Replacement and Re-calibration

When a faulty module has been replaced with a substitute, adjustment or recalibration may be necessary. The following information offers guidance as to what will be required when replacements are fitted.

This procedure applies when the replacement module has been previously installed in a functional instrument and correctly tested, adjusted and set up. It does not apply to un-tested modules or modules which may have been maladjusted.

Adjustments and re-calibration should be done with care. It is quite possible that the replacement module will have very similar characteristics to the original, such that re-calibration is unnecessary. Follow the normal 2945/2946 calibration procedure.

In the particular case of adjustment (A), it should be possible to adjust it such that re- calibration (9) is not necessary.

Module	Adjustments	Re-calibrations etc.
A2 input mixer	(A)	(6), (7), (9)
A3 2nd/3rd mixer	(A)	(9)
A4 10.7 MHz if & log.amp	(A), check (B)	(9)
A4/1 10.7 MHz if & log.amp	(A), check (B)	(9)
A6 output amp	(C)	(1), (2), (3), (4)
A6/1 output amp	(C)	(1), (2), (3), (4)
A7 1st LO control	None	None.
A7/1 1st LO control	None	None.
A8 1st LO	(A)	(9)
A8/1 1st LO	(A)	(9)
A9 2nd/3rd LO	(A)	(9)
A9/1 2nd/3rd LO	(A)	(9)
A10 90 MHz swept LO	(A)	(9)
A11 input switch & power meter	None	(1), (3), (6), (7), (9)
A11/1 input switch & power meter	None	(1), (3), (6), (7), (9)
A12 RF divider	None	(2), (4)
A12/1 RF divider	None	(2), (4)
A13 RF oscillator	(C)	(2), (4), (5)
A13/1 RF oscillator	(C)	(2), (4), (5)
A14 RF gen. controller	None	None
A14/1 RF gen. controller	None	None
A15 SSB demod	None	None

Module	Adjustments	Re-calibrations etc.
B1 Audio processor	(C)	(2), (4)
B1/1 Audio processor	(C)	(2), (4)
B2 microprocessor	None	(8). Change EEPROM IC32 (cal. data, Serial. no, and options data)
B2/1 microprocessor	None	(8). Change EEPROM IC32 (cal. data, Serial. no, and options data)
B3 An. cellular controller	None	None
B4 600R interface	None	None
B7 GPIB interface	None	None
B12 Memory card interface	None	Set up time/date
TCXO	None	(8)
OCXO	None	(8)
Sig. Gen. Attenuator	None	(3)
Receiver Attenuator	None	None
Power Supply	None	None

Adjustments

(A)	A4, A4/1	R4 - IF Gain
(B)	A4, A4/1	R119,R122 log. amp
(C)	B1, B1/1, B1/2	R61 RF level

Calibrations

(1)	Output level	
	(a)	N out Ant in
	(b)	BNC output
	(c)	N out N in
(2)	Output amplifier	
(3)	Attenuators	
	(a)	10 dB pad
	(b)	20 dB pad
	(c)	1st 40 dB pad
	(d)	2nd 40 dB pad
(4)	AM level	
(5)	FM level	
(6)	2-Port power meter	
	(a)	N-type input
	(b)	ANT input
	(c)	N-type no 10 dB
	(d)	ANT no 10 dB
(7)	1-Port power meter	
	(a)	0 in 0 out
	(b)	10 in 0 out
	(c)	0 in 10 out
	(d)	10 in 10 out
(8)	Frequency standard	
(9)	Narrow band power meter	

Microprocessor board replacement

The EEPROM IC32 on the microprocessor board contains all the options information, serial number, and calibration data. If IC32 can be transferred to the new PCB then no other adjustments or set-ups are needed. If it cannot, then the new board must be configured for use with the particular instrument.

The replacement PCB supplied contains no serial number. To enter the serial number of the instrument, proceed as follows:

CAUTION **The following key presses enable a hidden diagnostics menu. Once in this menu do not press any keys other than those stated below. Incorrect key presses could seriously affect the calibration and operation of the instrument and may result in the unit having to be returned to the factory for re-alignment.**

Use the key sequence [HELP/SETUP], *[Diagnostics]*, [2], [9], [4], [5], [ENTER], *[Diagnostics]*, *[ ]* (4th soft key down on the right), [1], [9], [0], [3], [ENTER], *[ ]* (4th soft key down on the right).

From the displayed screen select *[serial no]*. Then use the data keys to key in the nine digits of the serial number, (Ignoring the / or -), then press [ENTER].

Select [HELP/SETUP] and check that the serial number is set correctly.

Turn the Service Monitor off, then on again, and re-check the serial number.

Any valid Systems options must now be enabled.

Select the blue [SYSTEM] key. Press the soft key for the system to be enabled. Press the blue [SYSTEM] key, then use key sequence [2], [9], [4], and [5].

The screen should now be in password entry mode. Key in the relevant password and terminate with the [ENTER] key

CAUTION **If you do not have records of your passwords then please contact our spares department at the address shown below stating the instrument serial number and the options that need to be re-enabled. They will then verify that the instrument is authorised to have these options and provide you with the relevant passwords.**

Marconi Instruments Ltd.
Spares Department
Longacres House
Norton Green Road
STEVENAGE
Hertfordshire SG1 2BA
United Kingdom
Telephone: [+44] (1438) 772009
Fax: [+44] (1438) 746423

Chapter 4
INITIAL REPAIR

This chapter is provided to give guidance in identifying problems which might cause the Service Monitor to be withdrawn from use:-

- *Set-up errors* deals with mis-adjustments which could be mistaken for faults.
- *Failure to power up*, explains how to check the AC and DC input circuits, the power supply module and fuses.
- *Self tests* outlines the self test facility.

Set-up errors

Total white or blue screen

The wide range of contrast adjustment provided on the Service Monitor allows the screen to be adjusted from near peak white to almost total blue. If the instrument is switched off with either of these conditions set, the same condition may be present after powering up (see *Power up from, setting,* below). To reset the contrast level, press the [HELP SETUP] key, then adjust the rotary control until a suitable contrast is set.

Receiver not measuring

The receiver will not make measurements to signals if the SQUELCH facility is operating. Check the position of the SQUELCH control on the front panel.

RF port selection

RF input and output port settings are stored in memory. These may be incorrect for the physical set-up in use, if the Service Monitor has been switched off and on between test sessions (see *Power up from, setting,* below).

If the N type RF port is selected as the input and output port, the signal generator output signal will have a path to the receiver circuits of the Service Monitor through the combining network. This signal can affect measurements to signal fed into the N type RF port. The RF generator should be turned off if not required.

AF input readings

AF signals fed to the AF INPUT BNC connector on the front panel are routed through the AF filters. If the voltmeter is reported to be reading incorrectly, check that filters incompatible with the signal are not included in the set-up.

Distortion measurements

The distortion measuring facility requires a 1 kHz sine wave test signal. Erroneous results will be given by any other signal.

Power up from, setting

If unusual operation is occurring, this may be due to the Service Monitor having been set to perform in that manner by a user, and set to power up from Last Used Store 0 or User Store 2. To clear the Service Monitor of this condition it is necessary to power it up to the factory settings. The following procedure should be used:-

1. Press the [HELP SETUP] key.
2. From the help/setup screen press *[Setup]*, then *[Setup Page 2]*.
3. Check the display to identify which setting is highlighted adjacent to the *[Power Up From]* key. If Last Used Store 0 is highlighted, that store may contain the unusual settings.

4. Press the *[Power Up From]* key until Preset Store 1 is highlighted.
5. Turn the power switch OFF and then ON. The Service Monitor will now have powered up from the factory preset settings.

If the Service Monitor now operates correctly, once more turn the power switch OFF and then ON. Store 0 and Store 1 will now contain the factory settings.

If the Service Monitor was set to power up from User Store 2, repeat steps 4 and 5 above. If the Service Monitor now operates correctly, check the use history of the Service Monitor in order to prevent loss of any special settings. If Store 2 can be cleared, follow the procedure given in the operating manual.

Failure to Power Up

To make most of the checks suggested, it will be necessary to remove the instrument cover. Refer to Chapter 2 of this manual for guidance on the correct procedure.

The overall connection diagram Z44991/229 sheet 1, Fig. 7-1 will be found useful when following procedures described below.

If the instrument fails to power up, and is connected to an AC mains supply, make the following checks:

1. Check whether the cooling fan at the rear of the Service Monitor is operating. This gives an indication as to whether or not power is entering the power supply module of the Service Monitor. If the fan is running, the supply and input connections are in order.
2. If the fan is not running, check that the mains supply is 'Live'.
3. If the plug fitted to the AC supply lead uses a fuse, check that it is not open circuit.
4. Check that the fuse in the AC connector on the rear panel is not open circuit. Note that the fuse carrier has a stowage for a spare fuse. See *Spare mains fuse*, later.

If either of these fuses is open circuit, follow the procedures in chapter 5 of this manual, starting from the Pre-Power On Checks.

If the fuse or fuses above are intact, make the following continuity checks with the AC supply lead ***disconnected from the mains supply*** but connected to the Service Monitor:-

1. Between the LIVE pin of the AC supply plug and the L contact of connector E to the power supply module.
2. Between the NEUTRAL pin of the AC supply plug and the N contact of connector E to the power supply module.

Continuity should be found , when the power switch is in the ON position. If an open circuit is found during these checks, examine the power lead for a broken conductor and the power switch for disconnected conductors or faulty switch operation. If the continuity checks are satisfactory, follow the procedures in chapter 5 of this manual, starting from the Power Supply Checks.

If the instrument fails to power up and is connected to a DC supply, make the following checks.

1. Check whether the cooling fan at the rear of the Service Monitor is operating. This gives an indication as to whether or not power is entering the power supply module of the Service Monitor. If the fan is running, the supply and input connections are in order.
2. Check that the supply voltage is between 11 V and 32 V
3. Check that the supply voltage is able to deliver approximately 8 A without dropping below 11 V. The momentary surge at switch-on is difficult to monitor and a high supply resistance can prevent the power supply unit from starting.
4. Check that the DC supply fuse FS1, located in the fuse holder on the rear panel, is not open circuit.

If the fuse is open circuit, and a replacement becomes open circuit when the Service Monitor is powered up, follow the procedures in chapter 5 of this manual, starting from the Power Supply Checks.

If the fuse is intact, make the following checks:

Check for continuity between the each pole of the DC input connector on the rear panel and the DC input connection on the power supply module.

Check for continuity between the negative pole of the DC input connector on the rear panel and the frame of the Service Monitor.

If an open circuit is found during these checks, examine the connections between the rear panel and the power supply module. Note that the DC supply DOES NOT pass through the ON-OFF switch.

To check the DC control section of this switch ensure that no power, AC or DC, is connected to the Service Monitor. Disconnect connector D from the power supply module and make the following checks.

1. Check for continuity between contacts 4 and 7 of this connector, referring to the connection diagram for the correct operating sequence.

If these checks fail to locate the cause of the failure follow the procedures in chapter 5 of this manual, starting from the Power Supply Checks.

Spare mains fuse

The fuse carrier built into the AC mains connector on the rear panel has provision for carrying a spare fuse. This is the compartment first seen when withdrawing the carrier. The active fuse is housed in the inner compartment.

Self tests

A self-test program is contained within the Service Monitor software. This should be run if the performance of the Service Monitor becomes suspect. Instructions for running the self-test program are in chapter 2 of the operating manual.

If a self-test fails, a reason for the failure is displayed. Chapter 5 of this manual contains flowcharts designed to isolate faults to within a small area of the Service Monitor.

Chapter 5
FAULT DIAGNOSIS

Contents

Introduction 5-1
Safety 5-1
Conventions 5-1
Fault finding charts 5-3
Chart Index 5-3

Introduction

These charts have been produced to help in locating any faults the may arise in the operation of the Service Monitor. By selecting the chart most appropriate to the known or suspected fault area, then proceeding through the suggested procedures, the fault will be localised to a small area of the Service Monitor.

Safety

If it is felt that the instrument is unsafe to operate, for any reason, refer to chart 2 (Pre-power on checks). The safety of the Service Monitor is assessed by the procedures described.

Conventions

Component labelling

Within these flowcharts, references to components on printed circuit boards are preceded with the board identity. Individual pins of component or connections are designated with the suffix /x.

For example:

A3 IC11/3	refers to pin 3 of IC11 on PCB A3
B2 PLA/2,3,7	refers to pins 2, 3 and 7 of connector PLA on PCB B2

Wiring convention

If a particular printed circuit board is suspected of incorrect operation, an initial check for the presence of the power rail voltages at each board can reduce fault-finding time. The power rail connections within Service Monitor 2948 follow the following convention:

The first pin of the connector carrying the power rails will be 0 V (if present).

The next pin will carry the most negative supply used by on the board.

The other rails used by the board will be routed through successive pins in order of increasing voltage.

For example:

0 V −12 V +5 V +12 V +35 V

All cables carrying the power rail voltages are colour coded as follows:

0 V	Black
–12 V	White/Orange
+5 V	Red/Black
+12 V	Orange/Red
+35 V	Grey/Red

Chart 1
Charts Index

CHARTS INDEX	
CHART 1.	Charts Index
CHART 2.	Pre-Power On Checks
CHART 3.	Major Functions Inoperative after Power Up
CHART 4.	LCD Checks (1 of 2)
CHART 5.	LCD Checks (2 of 2)
CHART 6.	Front Panel Control Checks
CHART 7.	Diagram of Keyboard Matrix Configuration
CHART 8.	Power Supply Checks
CHART 9.	Spectrum Analyser Function Checks
CHART 10.	Receiver Route Checks
CHART 11.	Receiver Input Level Ranging Checks
CHART 12.	Look and Listen Function Checks
CHART 13.	Signal Generator Function Checks
CHART 14.	Signal Generator Route Checks
CHART 15.	Signal Generator Output Level Ranging Checks
CHART 16.	Signal Generator AM Checks
CHART 17.	Signal Generator FM Checks
CHART 20.	A2 Input Mixer Board Checks
CHART 21.	A3 2nd and 3rd Mixer Board Checks
CHART 22.	A4/1 10.7MHz IF Board Checks
CHART 23.	A6/1 Output Amplifier Board Checks
CHART 24.	A7/1 and A8/1 1st LO Generation Checks
CHART 25.	A9/1 1280MHz 2nd LO Generation Checks
CHART 26.	A9/1 and A10 90MHz 3rd LO Generation Checks
CHART 27.	A11/1 Input Switching Board Checks
CHART 28.	A15 SSB Board Checks
CHART 30.	A20/A21 Attenuator Checks
CHART 40.	B1/2 Audio Generator Checks
CHART 41.	B1/2 AM Demodulation Checks
CHART 42.	B1/2 FM Demodulation Checks
CHART 43.	B1/2 Demodulation Filter Checks
CHART 45.	B2/1 Processing of Log Amp Signal Checks
CHART 46.	B2/1 10MHz Clock Generation and Distribution
CHART 50.	C1 / C2 Initial Signal Generator Synthesiser Checks
CHART 51.	C1 / C2 Synthesiser Checks (using 576 - 720MHz VCO)
CHART 52.	C1 / C2 Synthesiser Checks (using 720 - 912MHz VCO)
CHART 53.	C1 / C2 Synthesiser Checks (using 912 - 1152MHz VCO)
CHART 54.	C3 RF Divider Board Checks
CHART 55.	C4 Bypass Board Checks
CHART 56.	C5 BFO Board Checks
CHART 60.	Signal Generator Frequency Derivation Plan
CHART 61.	Signal Generator RF Oscillator Output Frequency Table
CHART 70.	B3/1 Analogue Cellular Option Checks
CHART 71.	B3/1 Microprocessor Checks
CHART 72.	B3/1 Transmit Checks
CHART 73.	B3/1 Receive Checks

Chart 1
Charts Index

Chart 2
Pre-Power on Checks

Associated Circuit Diagrams:
Z44991/229 (2948 Interconnections Diagram).

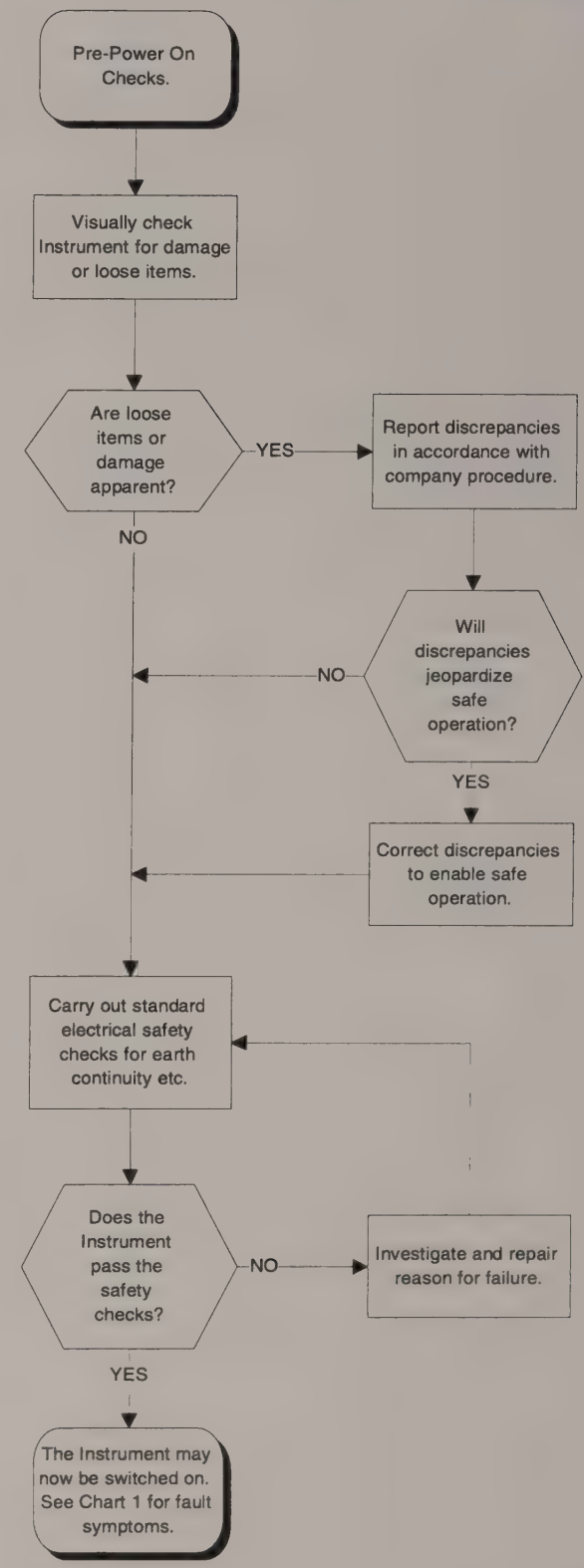

Chart 2
Pre-Power on Checks

Chart 3
Major Functions Inoperative After Power-Up

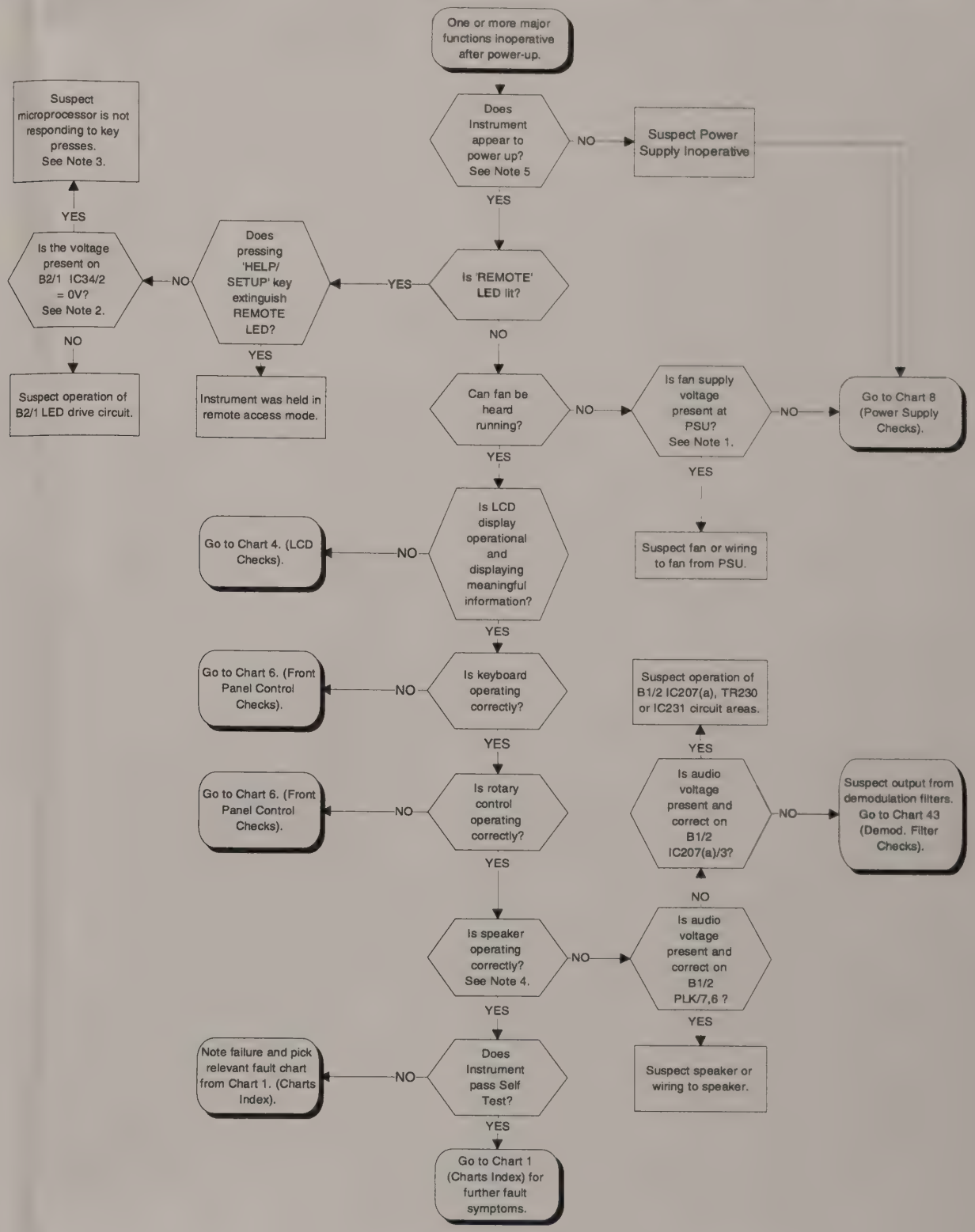

Associated Circuit Diagrams:
Z44991/229 (2948 Interconnections Diagram).
Z44830/110 (B2/1 Microprocessor Board).

NOTE 1.

Power Supply Connection Table:

Connector A (To B2/1 - Microprocessor Board)
Pin 1 0V
Pin 2 Pol. Key
Pin 3 -12V
Pin 4 +5V
Pin 5 +12V
Pin 6 Batt. Voltage (for measurement on B2/1)
Pin 7 ON/CHARGE LED drive. (A current drive of 10V o/c, or 1.8V when driving LED)

Connector B (To RF Distribution Board)
Pin 1 0V
Pin 2 -12V
Pin 3 Pol. Key
Pin 4 +5V
Pin 5 +12V
Pin 6 -24V
Pin 7 +24V

Connector C (To Fan)
Pin 1 +12V
Pin 2 0V
Pin 3 Pol. Key

NOTE 2.
The "REMOTE" LED is driven from B2/1 PLF. Pin 10 supplies +5V and pin 9 is pulled low by B2/1 IC34/2 to drive the LED. This gives approx. 3V on PLF/9 when the LED is active.

NOTE 3.
The microprocessor does not appear to be reacting to key presses. If the keyboard is suspected, go to Chart 6 (Front Panel Control Checks).

NOTE 4.
The speaker will be operational when demodulating modulated signals in Tx TEST, Dx TEST or Look and Listen modes, or when an audio input is applied to the AF IN socket (assuming Instrument filters etc. are set up correctly). Additionally, the last 3 self tests produce a 1KHz tone from the speaker. (Ensure volume is turned up).

Note 5.
When the Instrument powers up, the fan will be heard to start running. The attenuators will rattle to the required state. This sounds like a series of metallic clicks. The display should light to a pale blue colour assuming the contrast and brightness settings are correct. Finally, the relevant LED(s) should light adjacent to the selected input/output port(s)

Chart 3
Major Functions Inoperative After Power-Up

Chart 4
LCD Checks (1 of 2)

Associated Circuit Diagrams:
Z44991/229 (2948 Interconnections Diagram).
Z44830/110 (B2/1 Microprocessor Board).

NOTE 1.

The key press sequence for adjusting the contrast and brightness is as follows:

Press 'HELP/SETUP' key.
Press the grey softkey at the top RHS of screen five times. (This cycles through the five screen brightness settings).
Press the softkey below the top RHS key. (Screen contrast may then be adjusted by rotating the variable knob).

Using these directions screen settings may be altered even in the event that the current settings are such that no screen text is legible.

NOTE 2.

Contrast voltage appears on B2/1 SKA/3. Approximately -19V gives faint text, while -4V gives bold.

To test Brightness voltages, either check that the screen is seen to cycle through the five brightness settings when the brightness soft key is pressed, or more thoroughly, confirm B2/1 PLR/1 is providing +12V. Then, check action of TR23-25 by loading B2/1 PLR/2 with a known resistance (>3K9 to +12V) and measuring the voltage on PLR/2 generated by the pulldown action of the transistors.

NOTE 3.

The display 'data shift clock' is a square wave changing polarity every 200,200, 200,300nS and can be observed on B2/1 SKA/9.
The display 'start scan pulse' is a positive pulse every 9mS. It can be observed with a storage scope on B2/1 SKA/8.
The gate array, IC55, generates both these signals continuously and their absence indicates that the gate array itself is faulty or inoperative.
The textual 'display data' is provided from screen RAM IC63 under microprocessor control. The 'display data' may be observed on B2/1 SKA/11,12,13. Absence of this data could not only imply a gate array defiency, but also a micoprocessor or IC63 communication problem.

NOTE 4.

TP22 should be at 0 to -5V.
TP24 should be at approximately -20V.

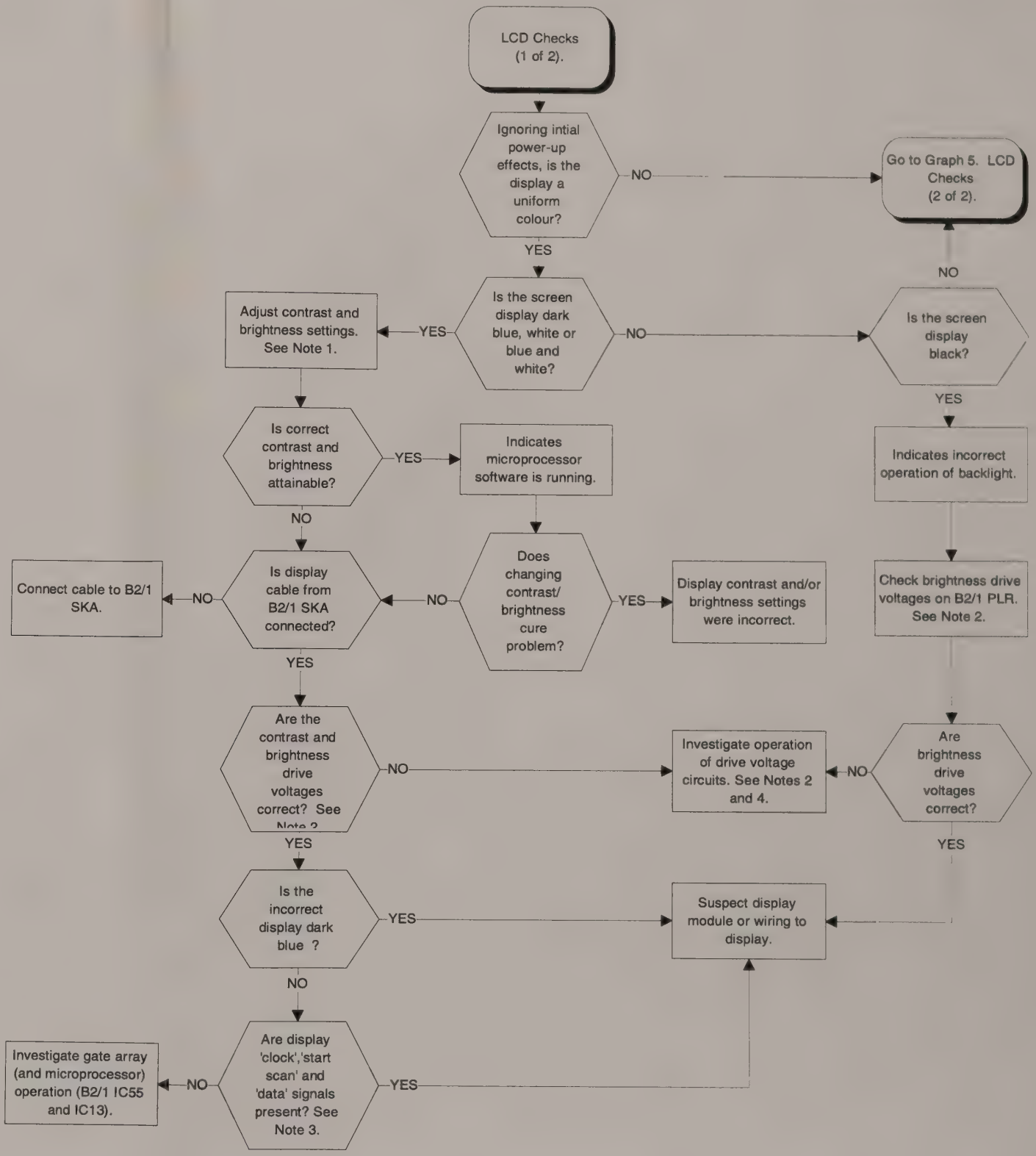

Chart 4
LCD Checks (1 of 2)

Chart 5
LCD Checks (2of 2)

Associated Circuit Diagrams:
Z44991/229 (2948 Interconnections Diagram).
Z44830/110 (B2/1 Microprocessor Board).

NOTE 1.
The instrument software can be induced to hang by various hardware problems. Essentially, the Instrument will hang in the situation where the microprocessor requests information and does not receive it. This could occur, for example, while the Instrument is waiting for interrupts to signify the completion of a measurement, waiting for interrupts from the DSP or during the handshaking used when writing to the EEPROM.

NOTE 2.
The graphics displays are the spectrum analyser trace, barcharts and scope trace. To check if the graphics generation circuitry is causing the problem, enter the 'HELP/SETUP' screen. In this screen, there are no graphics and hence no opportunity for a graphics problem to manifest itself.

NOTE 3.
Graphics are generated by the DSP, (B2/1IC56). Having been generated, they are stored in the 'D.S.P. and graphics' RAM, (B2/1 IC64). From there, the graphics data is passed to the gate array, (B2/1 IC55), which processes the data and passes it on to the display via SKA.
Hence, problems involving graphics generation can be caused by faults with B2/1 IC's13,56,64 and 55 or with communication between the four devices (B2/1 IC57 to IC62).

NOTE 4
Display text (i.e. permanent characters) is retrieved from the screen RAM, (B2/1 IC63), passed to the gate array,(B2/1 IC55), which processes the data and then passes it on to the display via SKA. Hence, problems involving textual characters can be caused by faults with B2/1 IC's13,55 and 63 or with communication between the three devices.

NOTE 5.
The log amp output is 0 to 5V on B2/1 PLT/2, representing an 80dB range. In 2dB/div. mode, this voltage is magnified (x5) with respect to 5V - i.e. top of screen. Magnification is effected by closing B2/1 IC71(b) (x3.33) and also internally in the DSP (x1.5).

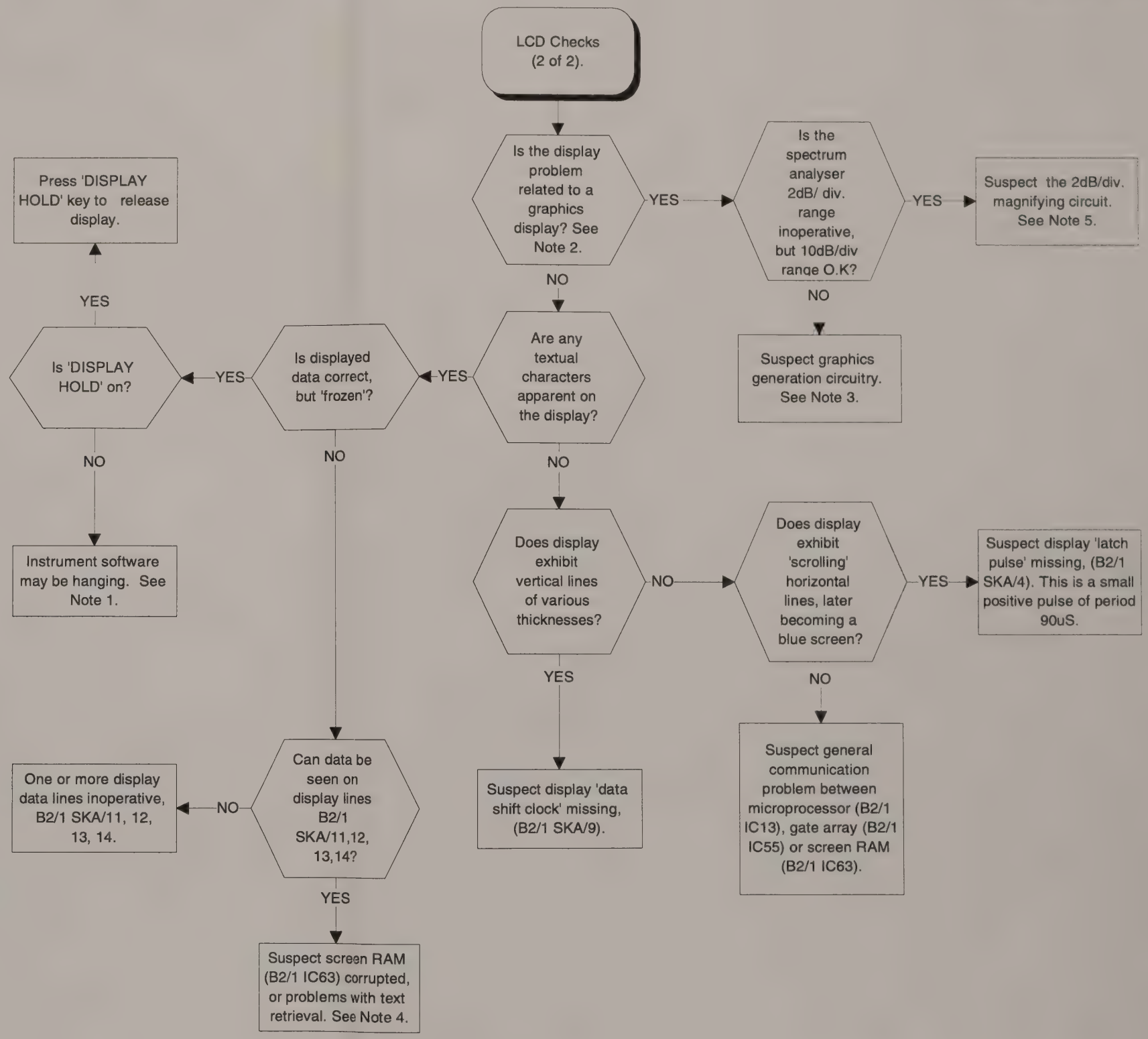

Chart 5
LCD Checks (2 of 2)

Chart 6
Front Panel Control Checks

Associated Circuit Diagrams:
Z44991/229 (2948 Interconnections Diagram).
Z44830/110 (B2/1 Microprocessor Board).

NOTE 1.

The keyboard forms a matrix desribed by vertical columns A-H and horizontal rows 1-8. The layout is shown on Chart 6. Pressing a key connects the relevent row to the relevent column. For example, pressing the "HELP/SETUP" key connects row 8 to column H. This results in B2/1 PLH 11 and 26 becoming connected. This then pulls B2/1 IC38/4 and IC39/4 low (0.7V) as TR11 is turned on. Other keys are decoded in a similar fashion.

NOTE 2.

B2/1 TP10 becomes the keyboard interrupt.
Low = key pressed and vice versa.

NOTE 3.

IC29 gates the keyboard interrupt. IC28 turns off the interrupt after approx. 700uS by microprocessor request.

NOTE 4.

B2/1 TP9 is generally busy with various interrupts. However, it is possible to identify the keyboard and rotary interrupts on top of the background activity. There is least background activity when in the HELP/SETUP screen.

NOTE 5.

+5V is supplied to the rotary by B2/1 PLH/1. When the rotary is turned, square waves are returned on PLH/5 and 6. The phase relationship of the two square waves indicates the direction of rotation:
PLH/5 lagging = clockwise.
PLH/5 leading = anti-clockwise.

NOTE 6.

The speaker VOLUME control signal enters B1/2 on B1/2 PLH/3. It controls the gate voltage of B1/2 TR230, which acts as a variable resistor.
The SCOPE vertical shift control provides a d.c. offset signal to B1/2 IC204(a)/3 via B1/2 PLH/1. This offset is added to the scope signal.
The SQUELCH control voltage enters B1/2 on PLH/2 and leaves directly on PLB/8 to B2/1 PLM/8 after which it is read by B2/1 IC44 A/D converter.

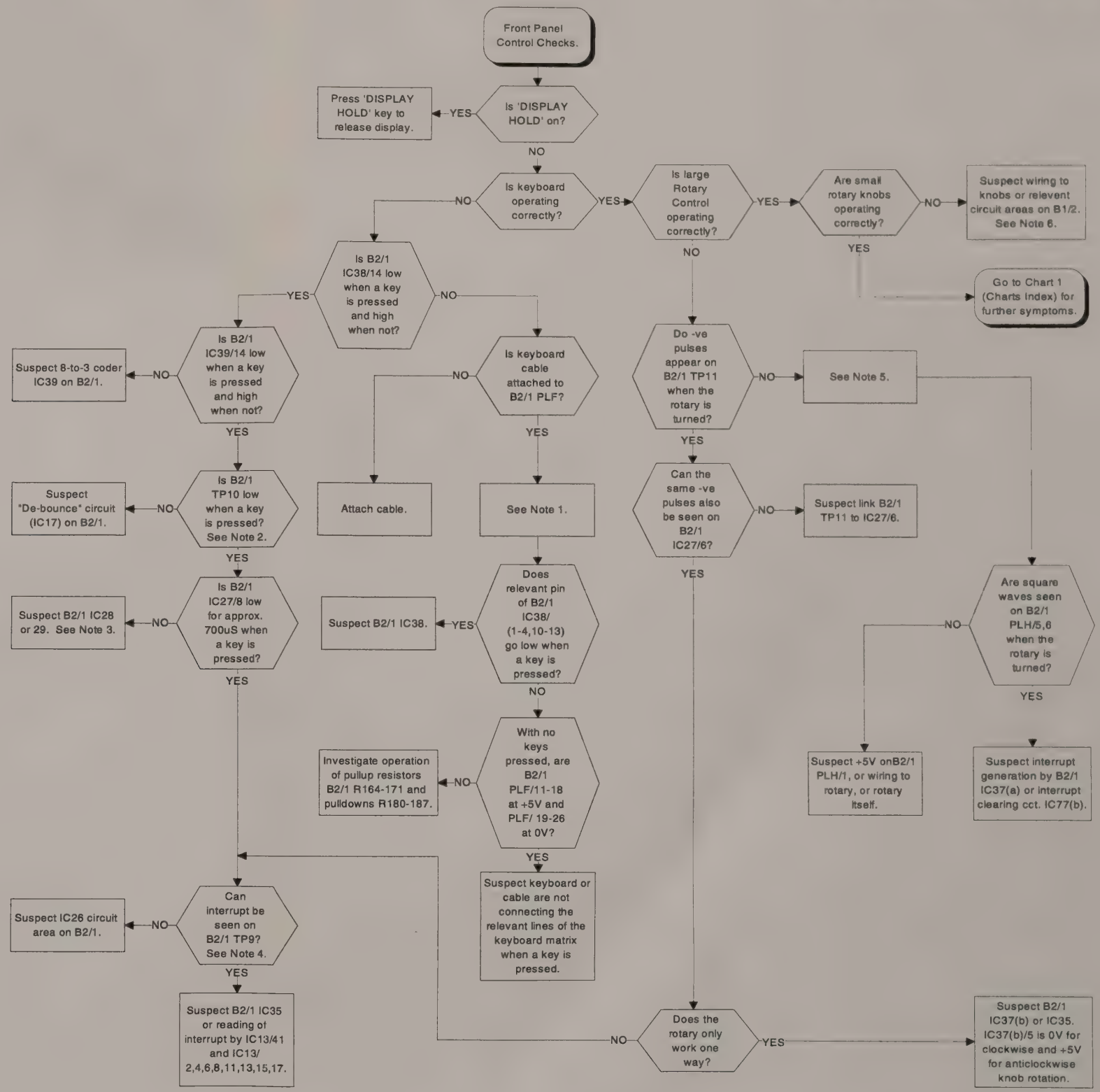

Chart 6
Front Panel Control Checks

Chart 7
Diagram of Keyboard Matrix Configuration

Associated Circuit Diagrams:
Z44991/229 (2948 Interconnections Diagram).
Z44830/110 (B2/1 Microprocessor Board).

Example:
Key marked in black shorts
lines 5 and C together.

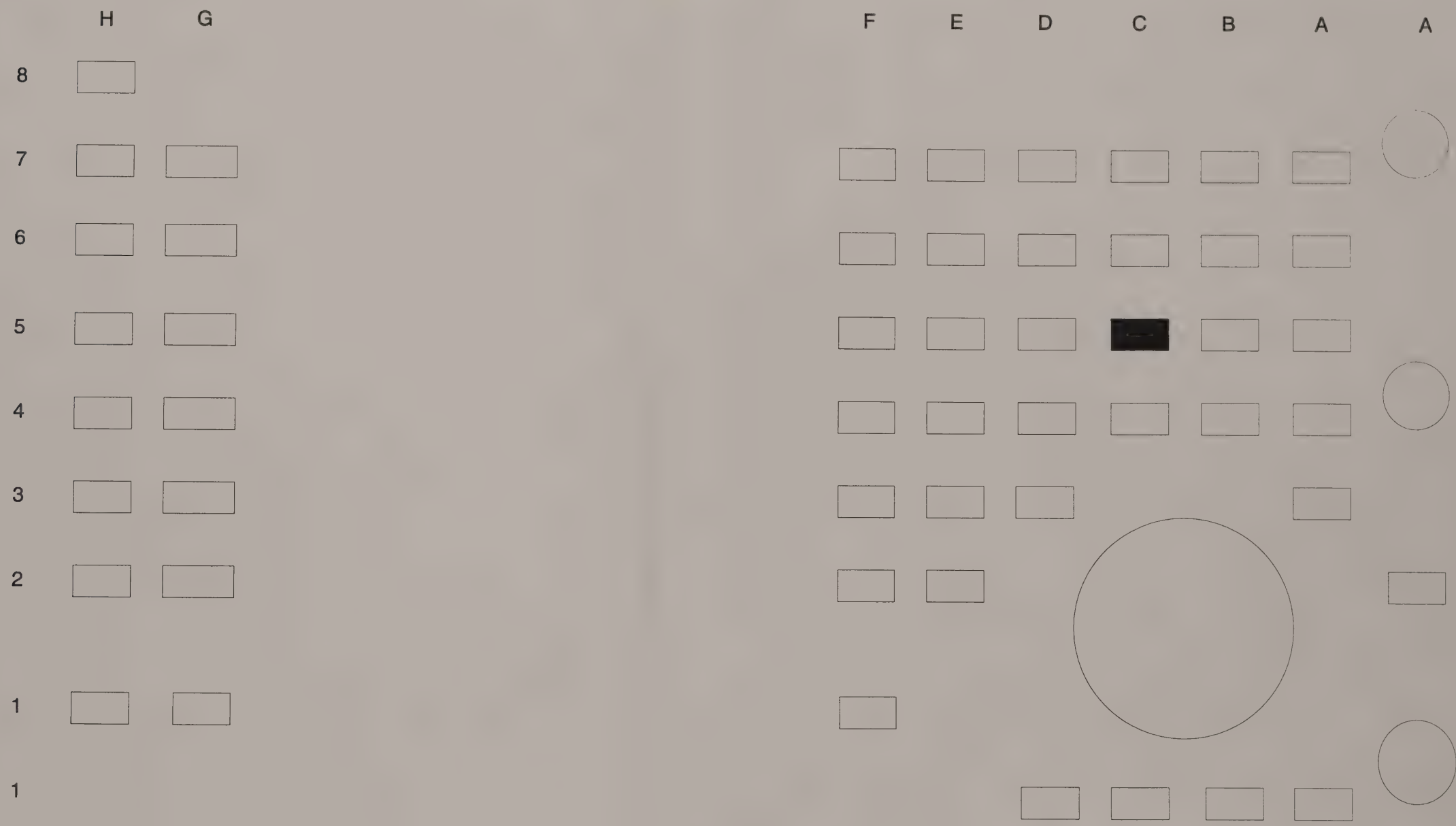

Chart 7
Diagram of Keyboard Matrix Configuraton

Chart 8
Power Supply Checks

Associated Circuit Diagrams:
Z44991/229 (2948 Interconnections Diagram).

NOTE 1.
Power Supply Connection Table:

Connector A (To B2/1 - Microprocessor Board)
Pin 1 0V
Pin 2 Pol. Key
Pin 3 -12V
Pin 4 +5V
Pin 5 +12V
Pin 6 Batt. Voltage (for measurement on B2/1)
Pin 7 ON/CHARGE LED drive. (A current drive of 10V o/c, or 1.8V when driving LED)

Connector B (To RF Distribution Board)
Pin 1 0V
Pin 2 -12V
Pin 3 Pol. Key
Pin 4 +5V
Pin 5 +12V
Pin 6 +12V (only with connector on!)
Pin 7 +36V (only with connector on!)

Connector C (To Fan)
Pin 1 +12V
Pin 2 0V
Pin 3 Pol. Key

NOTE 2.
In most cases, the Power Supply will not run up to voltage when all loads are removed. Hence, remove all the loads (Connectors A to C) in turn.

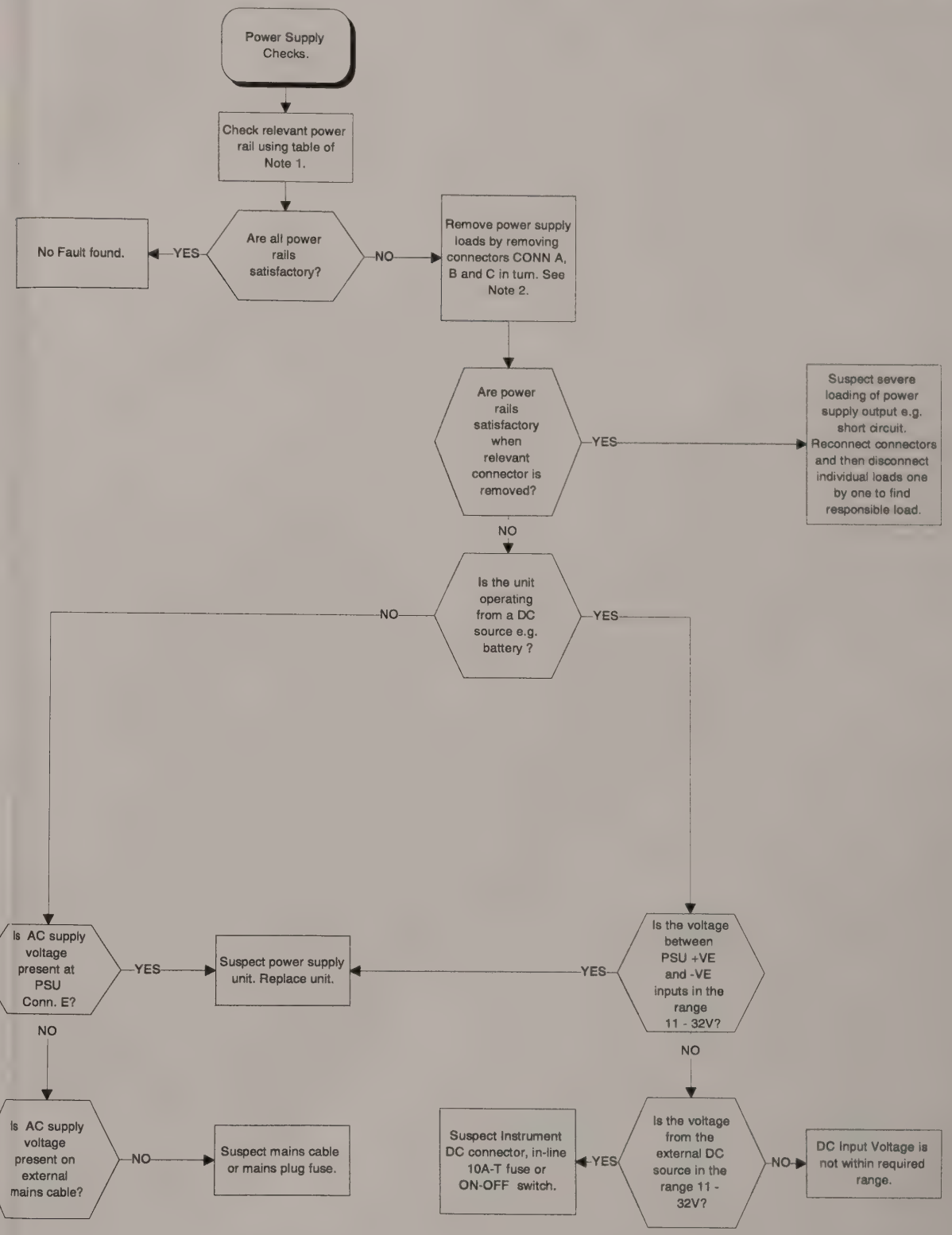

Chart 8
Power Supply Checks

Chart 9
Spectrum Analyzer Function Checks

Associated Circuit Diagrams:
Z44991/229 (2948 Interconnections Diagram).
Z44829/923 (A3 2nd and 3rd Mixer Board).
Z44830/103 (A4/1 10.7MHz IF).
Z44830/110 (B2/1 Microprocessor Board).

NOTE 1.
Select SPEC ANA mode. Select required Service Monitor input port. Set Service Monitor RES BW = AUTO.
If ANTENNA port is selected, set Service Monitor REF LEVEL = -20dBm. Apply a CW signal at -20dBm to the ANTENNA port and set the Service Monitor CENTRE FREQ to the frequency of the input signal.
If N-TYPE port is selected, set Service Monitor REF LEVEL = +6dBm. Apply a CW signal at +6dBm to the N-TYPE port and set the Service Monitor CENTRE FREQ to the frequency of the input signal.

IT SHOULD BE NOTED that this set up procedure requests a particular SPEC ANA REF LEVEL. If the process of setting this REF LEVEL causes correct functionality to return, it is probable that the Instrument is faulty over only part of its input range. In this situation, go to Chart 11 (Receiver Input Level Ranging Checks) to verify correct operation over the entire range.

NOTE 2.
For Service Monitor CENTRE FREQ = 111MHz, REF LEVELS as per Note 1 and no input signal:

RES BW	Noise Floor wrt Top of Screen.
300Hz	-77dB
3KHz	-74dB
30KHz	-64dB
300KHz	-57dB
3MHz	-45dB

NOTE 3.
A low noise floor usually indicates that there is low gain in the receiver, a fault with the A4/1 log amp circuit or a fault with the interpretation of the log amp output voltage on the Microprocessor Board (B2/1).
A high noise floor usually indicates that a local oscillator is unstable, there is a faulty (noisy) device in the receiver path or that an unwanted IF frequency is being generated somewhere in the IF strip.

To investigate both these faults, follow the instructions of Chart 10, looking for correct gains and noise floor levels. Additionally, when looking for unwanted IFs, see if the problem remains when the input signal is removed. If so, follow Chart 10 with no input signal, to see at what point in the I.F. strip the unwanted I.F. is being generated.

NOTE 4.
Voltages seen on B2/1 PLN and A4/1 PLA for the different RES BW:

RES	B2/1 PLN/	17	16	15	14
BW	A4/1 PLA/	5	6	7	8
300Hz		0V	0V	0V	5V
3KHz		0V	0V	5V	0V
30KHz		0V	0V	0V	0V
300KHz		5V	5V	0V	0V
3MHz		0V	5V	0V	0V

NOTE 5.
The IF bandwidth is initially defined to be approximately 3MHz at the 79.3MHz IF by the tuned loads of A3 TR3 and IC2/3. The bandwidth is then further reduced by selecting one of the five 10.7MHz IF filters on A4/1.

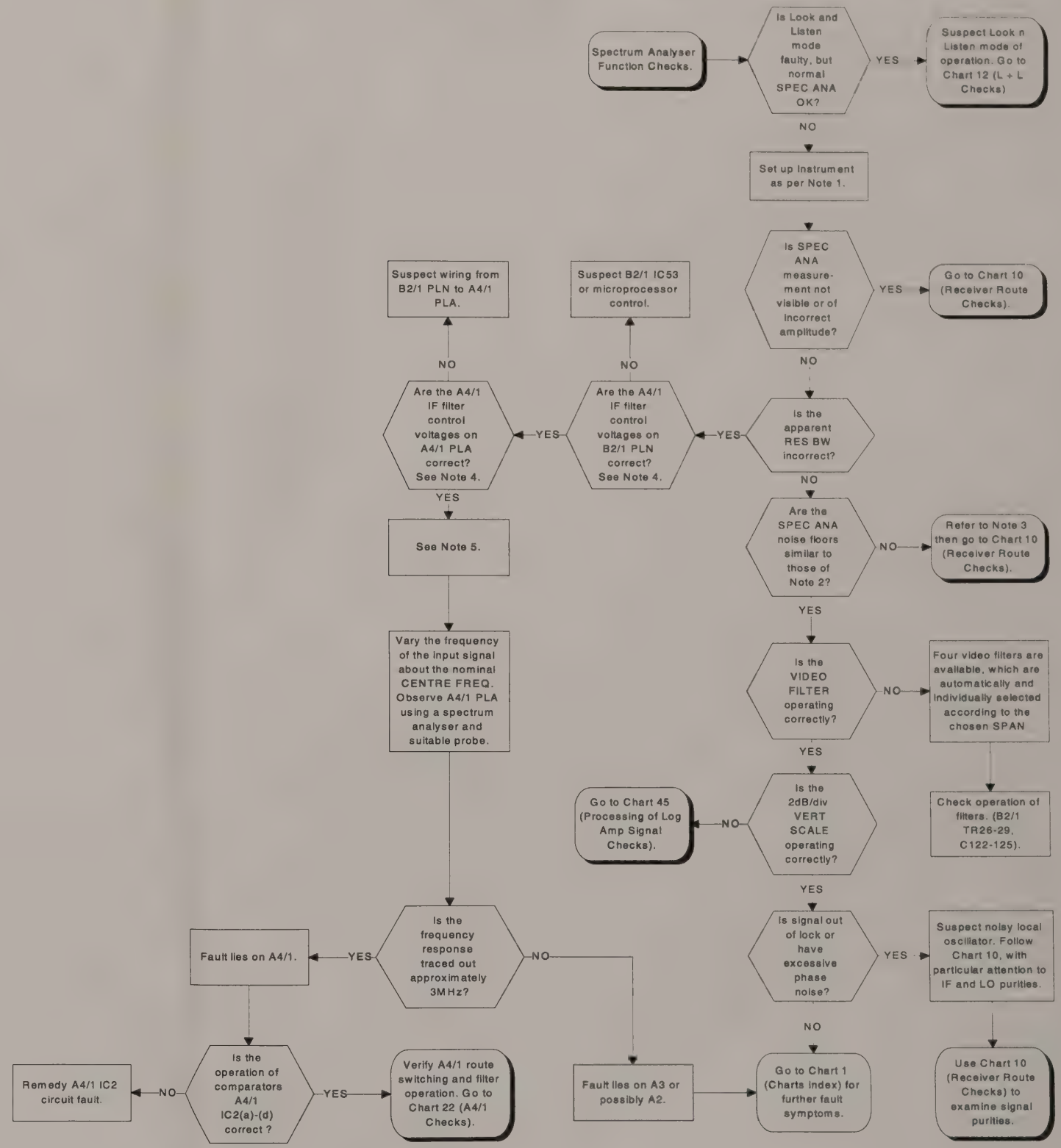

Chart 9
Spectrum Analyzer Function Checks

Chart 10
Receiver Route Checks

Associated Circuit Diagrams:
Z44991/229 (2948 Interconnections Diagram).
Z44829/922 (A2 Input Mixer Board).
Z44829/923 (A3 2nd and 3rd Mixer Board).
Z44830/103 (A4/1 10.7MHz IF Board).
Z44830/163 (A11/1 Input Switching Board).
Z44830/110 (B2/1 Microprocessor Board).

NOTE 1.
The log amp output is 0 to 5V on B2/1 PLT/2, representing an 80dB range. This 'raw' display trace may be observed on an oscilloscope, with a timebase similar to the Service Monitor sweep speed (Initially try 10mS/div). Thus, a signal corresponding to 'top of screen' will peak at +5V on the oscilloscope.

NOTE 2.
This is not a true 'dBm' measurement, but simply the signal level measured on a spectrum analyser using a zero loss probe.

NOTE 3.
The ANTENNA input connector is routed directly to A11/1 (bottom side RF tray) via a semi-rigid cable. However, the N-Type connector is routed to A11/1 via a 20dB pad mounted directly behind the connector. This pad, together with a 6dB splitter on A11/1 (through which the N-type signal passes), accounts for the 26dB difference in level between the ANTENNA and N-Type input signals.

NOTE 4.
The receiver is being swept over a 1KHz span. Therefore, to observe any of the swept I.Fs, use a wide span and/or wide resolution bandwidth filter on the external measurement spectrum analyser.

NOTE 5.
This is a true dBm measurement.

NOTE 6.
To gain access to this cable in a 2947 or 2948, the sig. gen. RF tray will have to be hinged out. This requires the removal of two RF cables and the memory card board from the tray.

Chart 10
Receiver Route Checks

Chart 11
Receiver Input Level Ranging Checks

Associated Circuit Diagrams:
Z44991/229 (2948 Interconnections Diagram).
Z44830/163 (A11/1 Input Switching Board).
Z44829/892 (A21 Input Attenuator Board).
Z44829/922 (A2 Input Amplifier Board).

NOTE 1.
Select Service Monitor SPEC ANA mode and required input port (N or ANT). Apply a 100MHz signal to the chosen port at a level of -20dBm if the ANT port is selected, or +6dBm for the N-TYPE port.

NOTE 2.
The sensitivity of the Service Monitor is dictated by the settings of the input attenuators and the 20dB input amplifier. The attenuators comprise of a switchable 10dB pad on A11/1 and switchable 20dB and 40dB pads located together in the Input Attenuator assembly (A21). The 20dB input amplifier can be bypassed to provide a 0dB through route.

The ANTENNA input is routed directly to the receiver. However, the N-TYPE input is routed via a 20dB pad mounted directly behind the connector and a 6dB splitter on A11/1. Thus, the N-TYPE port is 26dB less sensitive than the ANTENNA port.

In Tx TEST mode, the instrument autoranges according to it's measurement of the input power. However, in SPEC ANA mode, the input level ranging is wholly specified by the requested SPEC ANA REF LEV. This can be useful when fault finding as particular input attenuator/ amplifier configurations can be chosen by selecting the relevant REF LEVEL as per Table 1:

TABLE 1. INPUT LEVEL RANGING SCHEME.

S.A. REF LEV / dBm				A11/1
ANTENNA	N-TYPE	INPUT AMP	INPUT ATTN.	10dB PAD
+30	+56	0	-60	0
+20	+46	0	-40	-10
+10	+36	0	-40	0
0	+26	0	-20	-10
-10	+16	0	-20	0
-20	+6	0	0	-10
-30	-4	+20	-20	0
-40	-14	+20	0	-10
-50	-24	+20	0	0

NOTE 3.
Measure the signal level from the Input Attenuator (A21). This measurement point FOLLOWS the -10dB pad on A11/1 and the Input Attenuator, but PRECEDES (and is therefore unaffected by) the input amplifier. Vary the SPEC ANA REF LEV and check that the input signal is attenuated according to columns 4 and 5 of Table 1. For example, for a REF LEV of 0dBm (with ANT port selected), the measured signal should be -20dBm - 20dB - 10dB = -50dBm. Remember the extra 26dB attenuation on the N-TYPE port ! (See Note 2, para 2).

NOTE 4.
Measure the signal level on A2 C11 with a zero loss probe. This measurement point FOLLOWS all the attenuators AND the input amplifier. Vary the SPEC ANA REF LEV and check that the input signal is modified according to columns 3,4 and 5 of Table 1. For example, for a REF LEV of -30dBm (with ANT port selected), the measured signal should be -20dBm +20dB - 20dB - 0dB = -20dBm. Remember the extra 26dB attenuation on the N-TYPE port ! (See Note 2, para 2).

NOTE 5.
Measure the signal level from the Input Switching Board (A11/1). This measurement point FOLLOWS the -10dB pad on A11/1, but PRECEDES (and is therefore unaffected by) the Input Attenuator and input amplifier. Vary the SPEC ANA REF LEV and check that the input signal is attenuated according to column 5 of Table 1. For example, for a REF LEV of 0dBm (with ANT port selected), the measured signal should be -20dBm - 10dB = -30dBm. Remember the extra 26dB attenuation on the N-TYPE port ! (See Note 2, para 2).

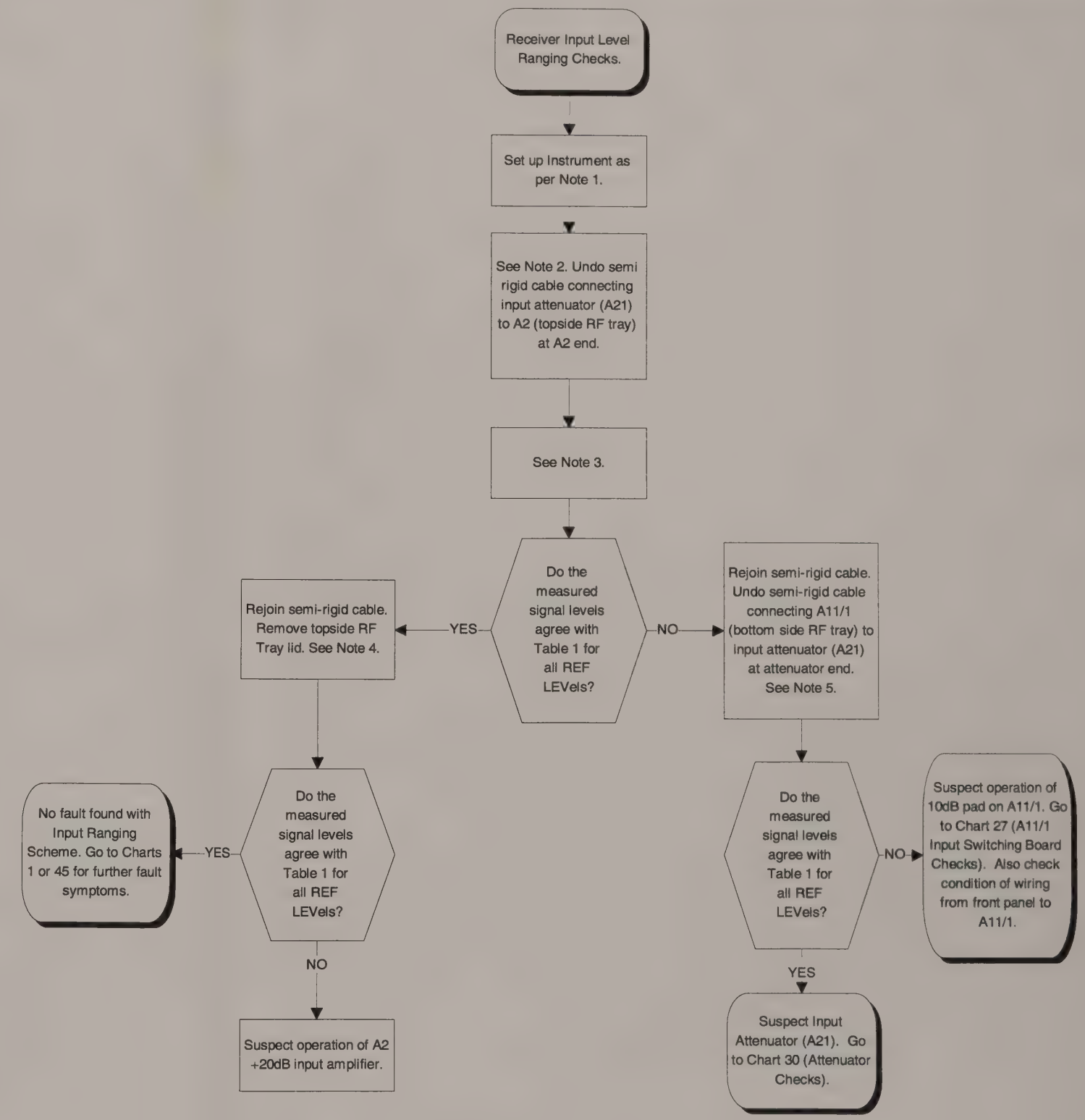

Chart 11
Receiver Input Level Ranging Checks

Chart 12
Look and Listen Function Checks

Associated Circuit Diagrams:
Z44991/229 (2948 Interconnections Diagram).
Z44830/097 (A9/1 2nd and 3rd LO Board).
Z44829/930 (A10 90MHz Swept LO Board).
Z44830/180 (B1/2 Audio Processor Board).

NOTE 1.
Select SPEC ANA Look and Listen mode with SPAN=1MHz and RES BW=AUTO. Remove topside RF tray lid.

NOTE 2.
It is assumed that the 90MHz LO works in normal SPEC ANA mode (i.e. is at a level of 0dBm on A10 PLC at a fixed frequency of 90MHz). If not, go to Chart 26 (3rd LO Checks).

The principle of Look and Listen mode is that the 90MHz 3rd LO is swept. The operation is split into two phases. In the first, the A10 PLA/6 sweep control line opens switch A10 IC3(a). This breaks the phase locking of the VCO and makes it run free. Simultaneously, the A10 PLE ramp signal drives the VCO varactor directly to modulate the VCO over the required span.
In the second phase, both switches A10 IC3(a) and (d) close, thereby allowing the VCO to lock back up to the 90MHz reference signal from A9/1,(on A10 PLB) and the sweep signal to the varactor is a steady voltage.
Therefore, if normal SPEC ANA mode is O.K. (which only operates in phase two), there must be a problem with the unlocking of the loop, or modulation of the A10 D1 varactor.

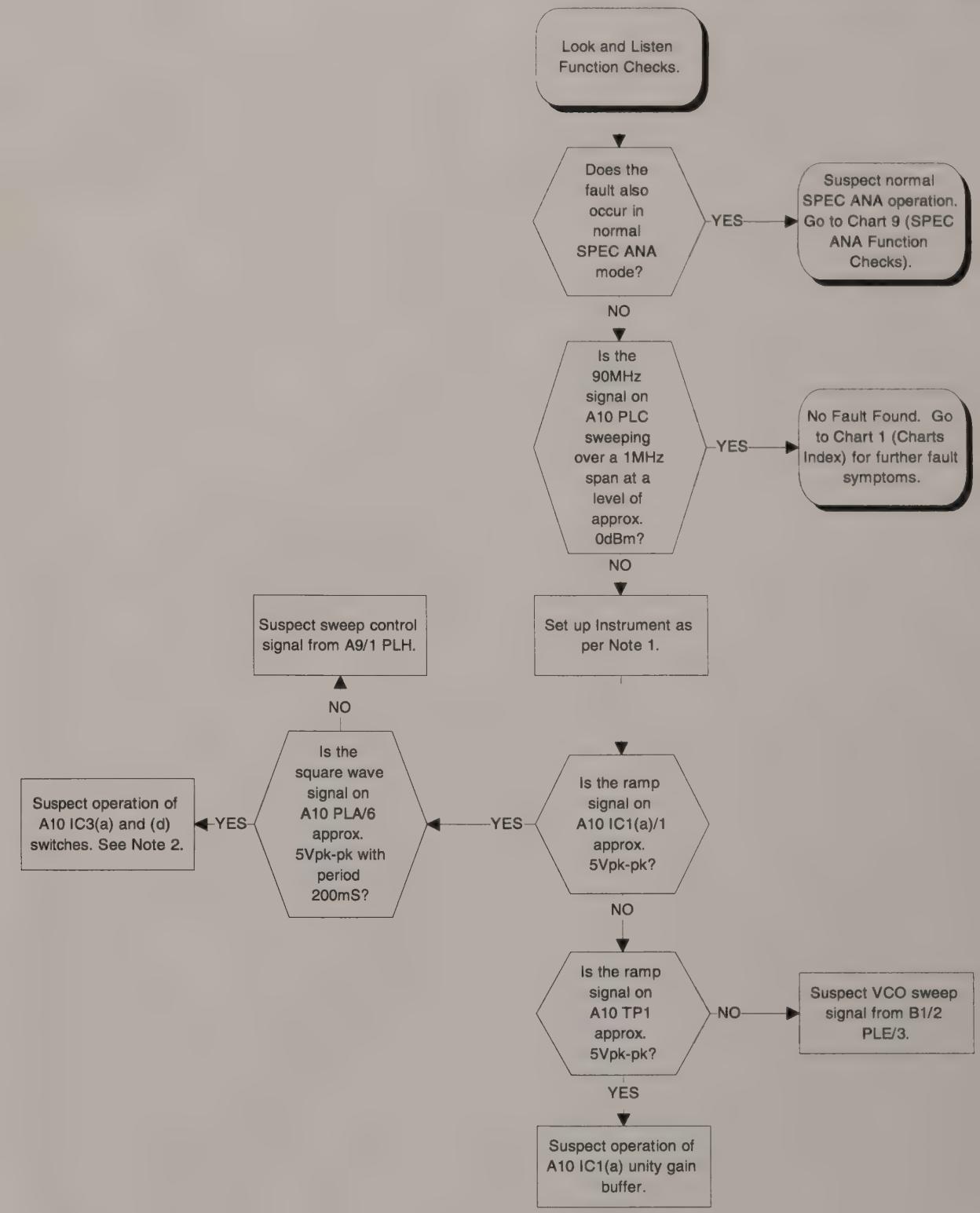

Chart 12
Look and Listen Function Checks

Chart 13
Signal Generator Function Checks

Associated Circuit Diagrams:
Z44991/229 (2948 Interconnections Diagram).
Z44829/891 (A20 Output Attenuator).
Z44829/925 (A6/1 Output Amplifier Board).
Z44830/097 (A9/1 2nd and 3rd LO Board).
Z44830/163 (A11/1 Input Switching Board).
Z44830/113 (C1 RF Generator Control Board).
Z44830/104 (C2 RF Oscillator Board).
Z44830/105 (C3 RF Divider Board).
Z44830/106 (C4 Bypass Board).
Z44830/107 (C5 BFO Board).
Z44830/108 (C6 RF Tray Interconnections Board).

NOTE 1.
Select Rx TEST mode. Select desired Service Monitor output port. Set desired RF GEN frequency. Ensure RF GEN is ON.
If BNC output is selected, set Service Monitor RF GEN LEVEL = 0dBm.
If N-TYPE port is selected, set Service Monitor RF GEN LEVEL = -26dBm.

IT SHOULD BE NOTED that this set up procedure requests a particular RF GEN output level. If the process of setting this test level causes correct functionality to return, it is probable that the Instrument is faulty over only part of its output level range. In this situation, go to Chart 15 (Signal Generator Output Level Ranging Checks) to verify correct operation over the range.

NOTE 2.
The signal generator output can be derived from one of three VCO's. One VCO (576-720MHz) is located on C2 and the other two are located on AF3, a daughterboard to C2 (720 to 912MHz and 912-1152MHz). The relevant VCO output frequency may then remain the same or be divided by two, four or eight on C3 to obtain signal generator frequencies below 576MHz, before being filtered. Filtering also occurs on C3 and is performed by a combination of eight low pass filters. Finally, for output frequencies below 72MHz a further BFO mixing process takes place. C4 routes the filtered signal to C5 to be mixed with a quarter of the 1280MHz LO (320MHz), before passing to the A6/1 Output Amplifier. Otherwise, for output frequencies above 72MHz, C4 routes the filtered signal directly to A6/1.
The table located in Chart 60 summarises how the various frequency bands are derived in this way.

For example, to obtain output frequencies between 100MHz and 113.999999MHz the output from the 720-912MHz VCO is divided by eight and subsequently filtered by the 140, 280 and 575MHz low pass filters. The output signal is then routed directly to the Output Amplifier on the C4 BFO bypass path.

The table can be an extremely effective way of determining a fault lpcation within the signal generator system. By observing which frequency band(s) are faulty, one can determine the common hardware to the band(s) as being suspect.

For example, if bands 114-143.999999MHz, 228-287.999999MHz, 456-575.999999MHz and 912-1050MHz are faulty, the 912- 1152MHz VCO can be suspected.

NOTE 3.
Follow Chart 14, with particular reference to signal frequencies.

NOTE 4.
Follow Chart 14, with particular reference to signal purities.

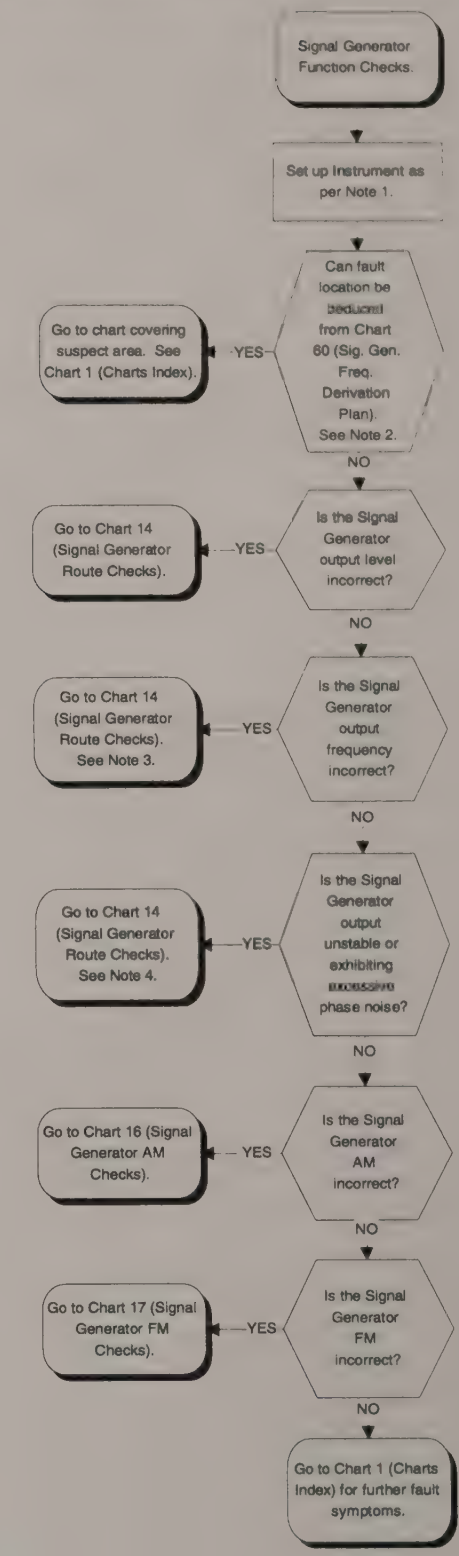

Chart 13
Signal Generator Function Checks

Chart 14
Signal Generator Route Checks

Associated Circuit Diagrams:
Z44991/229 (2948 Interconnections Diagram).
Z44829/891 (A20 Output Attenuator).
Z44829/925 (A6/1 Output Amplifier Board).
Z44830/097 (A9/1 2nd and 3rd LO Board).
Z44830/163 (A11/1 Input Switching Board).
Z44830/113 (C1 RF Generator Control Board).
Z44830/104 (C2 RF Oscillator Board).
Z44830/105 (C3 RF Divider Board).
Z44830/106 (C4 Bypass Board).
Z44830/107 (C5 BFO Board).
Z44830/108 (C6 RF Tray Interconnections Board).

NOTE 1.
The signal from C4 is at the RF GEN FREQ requested on the front panel. The level of the signal is approximately -16dBm.

NOTE 2.
Approximate signal levels (at desired output frequency) from A11/1:
N-TYPE output port selected: -6dBm.
BNC output port selected: 0dBm.

NOTE 3.
Remove the output attenuator from the chassis by unscrewing the two retaining screws and the SMA connection to A11/1 (bottom RF tray). Do not remove input semi-rigid cable. Suitably support attenuator for next test.

NOTE 4.
The signal from C3 to C4 is at the requested RF GEN FREQ for FREQ's above 72MHz. For FREQ's below 72MHz, the signal frequency is 320MHz above the requested RF GEN FREQ. The signal level is approx. -2dBm.

NOTE 5.
The signal from C4 to C5 is 320MHz above the requested RF GEN FREQ for FREQ's below 72MHz. The signal level is approx. -3dBm.

NOTE 6.
The signal from C5 to C4 is at the requested RF GEN FREQ and at a level of approx. -13dBm.

NOTE 7.
The signal generator output is derived from one of three VCO's on C2(/AF3). Its derivation can require division on C3. The frequency of the 'OSC FREQ' signal from C2 to C3 can be identified using the table of Chart 61. The signal level from C2 to C3 is approx. +8dBm

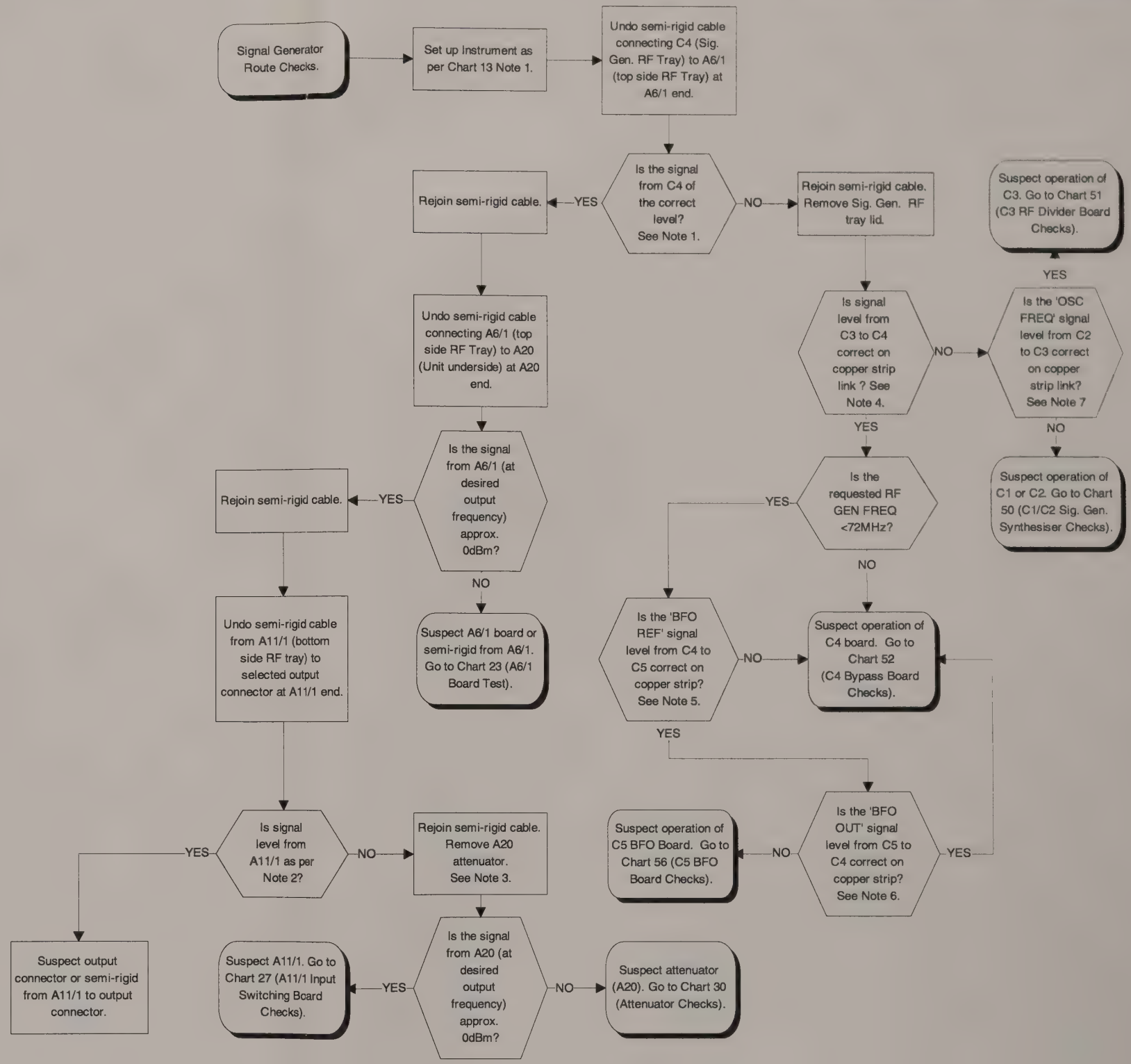

Chart 14
Signal Generator Route Checks

Chart 15
Signal Generator Output Level Ranging Checks

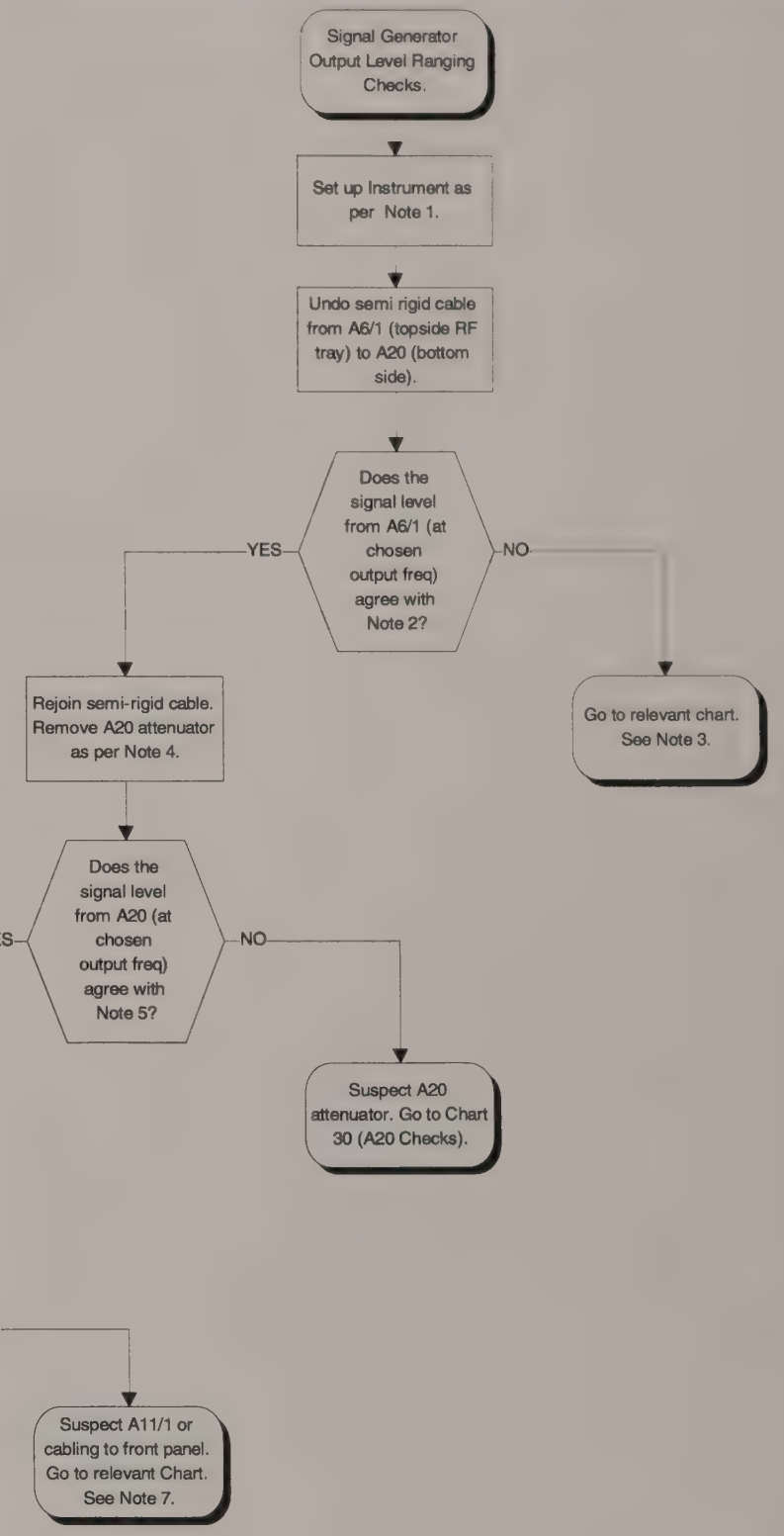

Associated Circuit Diagram:
Z44991/229 (2948 Interconnections Diagram).
Z44829/891 (A20 Output Attenuator).
Z44829/925 (A6/1 Output Amplifier Board).
Z44830/163 (A11/1 Input Switching Board).

NOTE 1.
Select Rx TEST mode. Select required output port. Set desired RF GEN frequency. Ensure RF GEN is on.

The signal generator output level is dictated by three factors. These are the A11/1 output 10dB pad, the A20 Output Attenuator and the variable gain of the A6/1 Output Amplifier. The Output Amplifier provides a fine level adjustment over an approximate 10dB range (+5dBm to -5dBm on the A6/1 output). The A6/1 Output Amplifier and A20 Output Attenuator are both software calibrated and the cals should be observed for anomalies before the hardware is condemned. Access to the cals requires a password.

The N-TYPE port contains an integral 20dB pad and is routed via a 6dB splitter on A11/1. Hence, the maximum output level from the N-TYPE port is 26dB less than that from the BNC output port.

NOTE 2.
On a calibrated Instrument, the output level from A6/1 is between approx. -5dBm and +5dBm. On an uncalibrated Instrument, the level may be up to 5dB higher than this. Using the rotary knob, vary the signal generator output level over its whole range and observe the signal from A6/1 (at the chosen output frequency) cycling through its 10dB range.

NOTE 3.
The incorrect output from A6/1 may be due to an A6/1 problem, or a fault earlier in the signal generator chain. If A6/1 is suspected, go to Chart 23 (A6/1 Checks). Otherwise, go to Chart 13 (Signal Generator Route Checks).

NOTE 4.
Having hinged the Signal Generator RF tray out from the underside of the Instrument, unscrew the two plain slotted screws in the top of the attenuator. Then, undo the SMA connection to A11/1 in the bottom side RF tray. This releases the attenuator from the chassis. With the semi-rigid cable from A6/1 still connected, connect a spectrum analyser to the disconnected SMA port (was to A11/1). CONSULT ACCESS AND LAYOUT CHAPTER 2 TO REFIT ATTENUATOR.

NOTE 5
The signal level from A20 is dictated by the settings of the A6/1 Output Amplifier and, of course, the A20 Output Attenuator itself. These settings are dictated by the requested output level. Use the variable knob to alter the RF GEN LEVEL and check that the output from A20 agrees with columns 3 and 4 of Table 1.
For Example, for requested output of -45dBm on BNC port, expect to see +5dBm - 40dB = -35dBm from A20.

TABLE 1.

REQUESTED O/P LEVEL /dBm		A6/1 O/P	A20 ATTN	A11/1 10dB
BNC	N-TYPE	LEVEL/dBm	STATE	PAD STATE
+5	-21	+5	0	0
-5	-31	+5	0	-10
-15	-41	+5	-20	0
-25	-51	+5	-20	-10
-35	-61	+5	-40	0
-45	-71	+5	-40	-10
-55	-81	+5	-60	0
-65	-91	+5	-60	-10
-75	-101	+5	-80	0
-85	-111	+5	-80	-10
-95	-121	+5	-100	0
-105	-131	+5	-100	-10
-115	-141	-5	-100	-10

NOTE 6.
At the front panel, the output signal has undergone processing by A6/1, A20 and the 10dB pad on A11/1, as per columns 3, 4 and 5 of Table 1.

NOTE 7.
Inspect (or test) cabling from A11/1 to front panel connector. If no fault is found, proceed to Chart 27 (A11/1 Board Checks), paying particular attention to the operation of the 10dB pad.

Chart 15
Signal Generator Output Level Ranging Checks

Chart 16
Signal Generator AM Checks

Associated Circuit Diagrams:
Z44991/229 (2948 Interconnections Diagram).
Z44829/925 (A6/1 Output Amplifier Board).
Z44830/180 (B1/2 Audio Processor Board - Sheets 3+4).

NOTE 1.
Select Rx TEST mode. Select desired Service Monitor output port. Set desired RF GEN frequency. Ensure RF GEN is ON.
If BNC output is selected, set Service Monitor RF GEN LEVEL = 5dBm.
If N-TYPE port is selected, set Service Monitor RF GEN LEVEL = -21dBm.
Set required AM MOD FREQ and MOD LEVEL. (Only use a single mod. generator). Turn PRE-EMPHASIS off.

IT SHOULD BE NOTED that this set up procedure requests particular RF LEVELS. If setting these levels causes correct functionality to return, it is probable that the Instrument is faulty over only part of its range. This may imply an Output Amp Linearity or AM calibration problem, or perhaps compression of the RF signal.

NOTE 2.
The RF level and AM drive signal is generated on B1/2. The signal leaves B1/2 on B1/2 PLD/7 and is applied to A6/1 PLB via a single feedthrough located in the side of the topside RF tray. For a nominal -20dBm RF input level (see Chart 13, Note 1), A6/1 provides an RF output level between -5dBm and +5dBm given a DC input on A6/1 PLB between approx. 0.7V and 2V respectively. Note, however, the control voltage is software calibrated and so will differ between Instruments. AM is obtained by modulating this DC control voltage. 99% AM modulates the drive signal between double its DC value and 0V. For less than 99% AM, the modulation on the drive signal is scaled accordingly. Hence, for a +5dBm output signal, with 99% sinusoidal AM, the control voltage will be approximately a 4Vpk-pk sine wave biased at 2V DC. The drive signal can be measured on the A6/1 feedthrough (located alone on side of tray) without removing the RF tray lid.

NOTE 3.
The signal on TP3 should be approximately one fifth of that measured on the A6/1 PLB feedthrough.

NOTE 4.
The signals on TP7 and TP8 are the output from audio generators 1 and 2 consecutively. For 100% AM the relevent testpoint will carry a 5.6Vpk-pk sinewave.

NOTE 5.
The audio generators based around B1/2 IC1 and IC2 provide the raw modulation drive signals. These signals are combined at B1/2 IC23(c), which has a gain of approximately two. The signal is then attenuated at B1/2 IC25 by an amount dictated by the AM Level calibration. This achieves correct AM linearity over the dynamic range of A6/1. The signal is then summed with a preset DC voltage set by R64 (which sets maximum RF level obtainable), before being attenuated further by IC27. IC27 applies the Signal Generator Output Level Linearity calibration.

To satisfactorily test the operation of the various calibration DACS, it is often easiest to reset the calibration figures to,say, full scale values of 4095 (but do NOT press SAVE CAL !). Having done this, the DACS should have unity gain. To restore the original calibration figures, simply switch the Instrument off and back on.

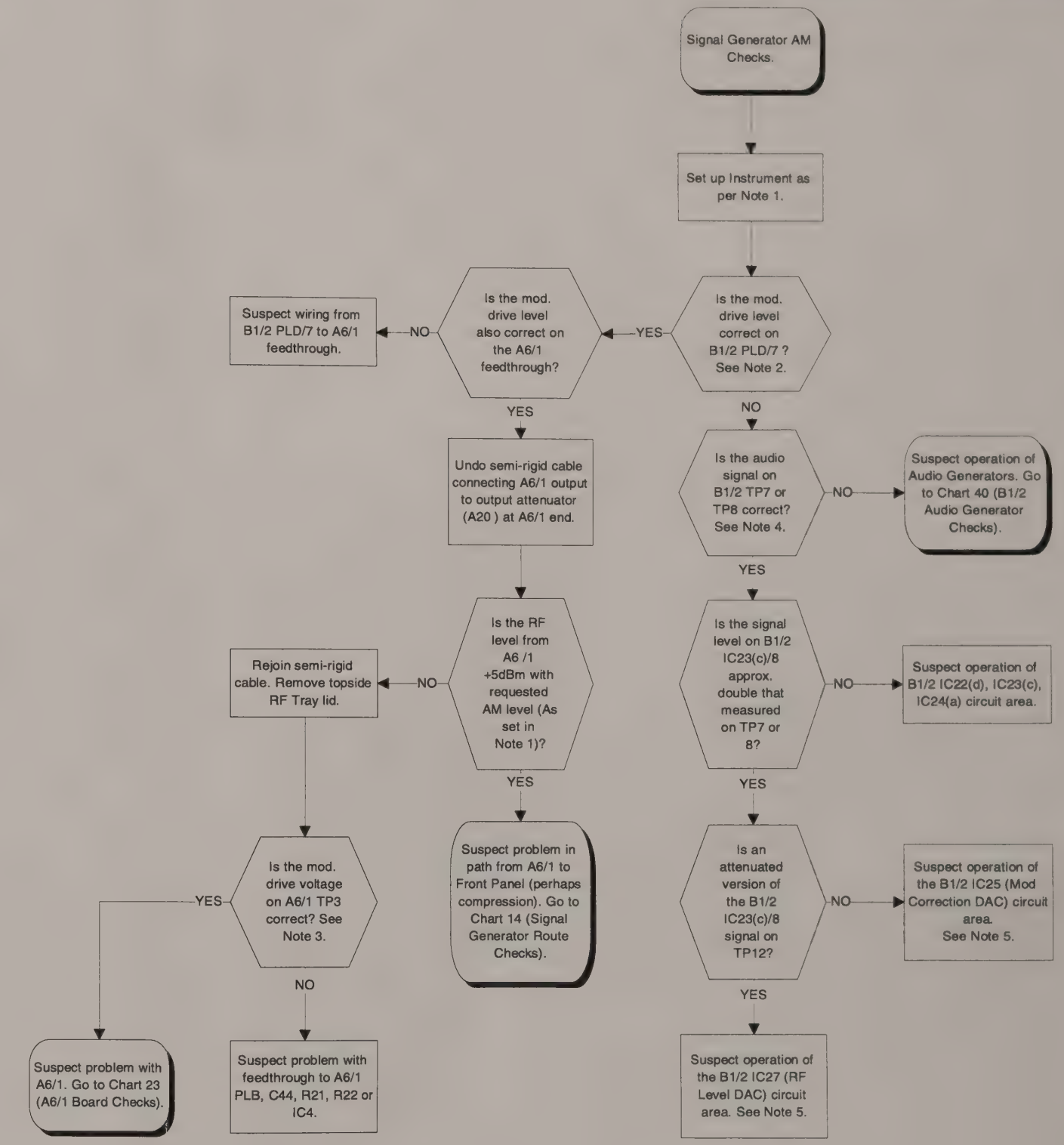

Chart 16
Signal Generator AM Checks

Chart 17
Signal Generator FM Checks

Associated Circuit Diagrams:
Z44830/180 (B1/2 Audio Processor Board - Sheets 3+4).
Z44830/113 (C1 RF Generator Control Board).
Z44830/104 (C2 RF Oscillator Board).

NOTE 1.
Select Rx TEST mode. Select desired Service Monitor output port. Set desired RF GEN frequency. Ensure RF GEN is ON.
If BNC output is selected, set Service Monitor RF GEN LEVEL = 5dBm.
If N-TYPE port is selected, set Service Monitor RF GEN LEVEL = -21dBm.
Set required FM MOD FREQ and MOD LEVEL. (Only use a single mod. generator). Turn PRE-EMPHASIS off.

NOTE 2.
Two FM drive signals are generated on B1/2. One modulates the C2 Signal Generator VCO's. It leaves B1/2 from B1/2 PLD/1 and goes to C2 PLG/2. The other drive signal is applied to the fractional-N divider control circuitry on C1. It leaves B1/2 from PLD/4 and goes to C1 PLB. The varactor drive signal on B1/2 PLD/1 varies between 0V and approx. 1Vpk-pk . Its value depends on which B1/2 FM range has been selected by the microprocessor and also the FM software calibration. If only a cursory check is required, simply ensure that the B1/2 PLD/1 signal level varies between approx. 0.5V and 1V as the FM deviation is varied. If a more accurate check is required, observe the two FM Control Tables in the 'C2 Frequency Modulation' section of the Chapter 1 Technical Description. These tables not only detail the C2 and B1/2 FM attenuation levels, but also how these attenuation levels must be reduced to compensate for when the VCO outputs are later divided to give the lower signal generator output frequencies.

The fractional-N divider drive signal on B1/2 PLD/4 varies between 1V and 2Vpk-pk and operation can be tested as above for the C2 drive.

NOTE 3.
The signal generator output is derived from one of three VCO's on C2(/AF3). Its derivation can require division on C3. The frequency of the 'OSC FREQ' signal from C2 to C3 corresponding to the desired RF GEN FREQ can be identified using the table of Chart 61.
To check the RF level from C2, it will be convenient to temporarily turn off the FM modulation, to enable the carrier level to be measured.
If only a cursory FM check is required, simply ensure that modulation on the C2 'OSC FREQ' signal is present and varies as the FM deviation is varied. If a more accurate check is required, observe, using Chart 60, which C3 divider ratio is operational for the requested RF GEN FREQ and hence how much greater the FM deviation will be on the pre-divided C2 'OSC FREQ' signal. For example, for RF GEN FREQ = 200MHz, the C2 'OSC FREQ' signal will be divided by four on C3. Hence, the C2 'OSC FREQ' signal will be 800MHz. If then 50KHz deviation is required on the Signal Generator, the C2 'OSC FREQ' signal will have 200KHz of deviation.

NOTE 4.
The signals on TP7 and TP8 are the outputs from audio generators 1 and 2 respectively. For 75KHz FM deviation the relevent testpoint will carry a 4.2Vpk-pk sinewave.

NOTE 5.
The C2 PLG/2 varactor modulation drive only has an effect outside the PLL bandwidth, as within the PLL bandwidth the loop attempts to negate the disturbance. Hence, the (C1 PLB) modulation drive to the C1 frac-N divider is used to ensure modulation rates within the loop bandwidth are achieved. At a mod. frequency of 200Hz only the C1 PLB divider drive has an effect as it is well within the loop bandwidth. Hence, if all FM deviations are correct at a 200Hz mod. frequency, the C1 PLB drive is working. Conversely, if deviation errors are experienced at high modulation rates, or errors only occur in a particular deviation range (as specified in NOTE 2), the C2 PLG/2 varactor drive can be suspected.

NOTE 6.
The audio generators based around B1/2 IC1 and IC2 provide the raw modulation drive signals. These signals are combined at B1/2 IC23(c), which has a gain of approximately 0.35. The signal is then attenuated at B1/2 IC25 by an amount dictated by the FM LEVEL calibration. This calibration caters for the variation of the C2/AF3 VCO sensitivities vs. RF frequency. To maximise the B1/2 IC28 FM level resolution, the varactor drive from B1/2 PLD/1 is always maintained between 0.5V and 1V. To gain further flexibility, the drive is then attenuated again on C2 to provide the coarse ranges. The signal is attenuated by B1/2 IC28 by factors of 1, 1/2, 1/4 and 1/8 and by C2 R64, R65, R66, R69 and R70 by 1, 1/8 and 1/64 1/512 to obtain the necessary ranges. The resultant varactor voltage on C2 TP9 is always between 0V and approx. 0.8Vpk-pk and changes within the ranges specified in the the two tables in the 'C2 Frequency Modulation' section of the Chapter 1 Technical Description.

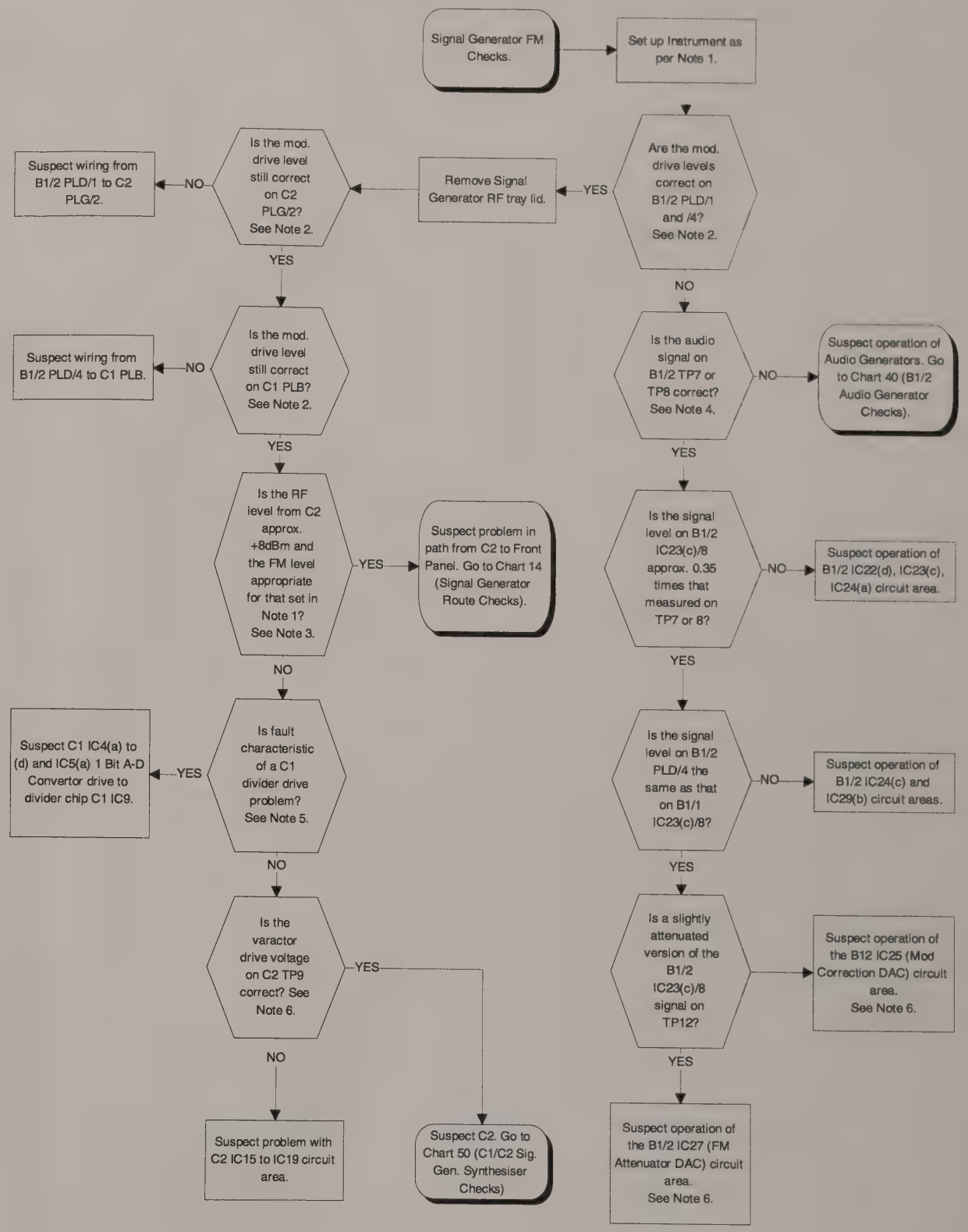

Chart 17
Signal Generator FM Checks

Chart 20
A2 Input Mixer Board Checks

Associated Circuit Diagrams:
Z44991/229 (2948 Interconnections Diagram).
Z44829/922 (A2 Input Mixer Board).
Z44830/112 (A8/1 Ist LO Board).

NOTE 1.
This is not a true 'dBm' measurement, but simply the signal level measured on a spectrum analyser using a zero loss probe.

NOTE 2.
The 1st LO frequency is 1359.3MHz above the REF FREQ set on the spectrum analyser and has a level of +7dBm.

NOTE 3.
If the ANTENNA port is selected, change the input signal level to -50dBm and set Service Monitor REF LEV = -50dBm.
If the N-TYPE port is selected, change the input signal level to -24dBm and set Service Monitor REF LEV = -24dBm.

NOTE 4.
The input stage of A2 consists of an input amplifier (A2 IC1), which is bypassed (by A2 D3,4) when the REF LEV set is greater than -30dBm (ANTENNA input selected) or -4dBm (N-TYPE input port selected).
The switching is effected by diodes (D2,3,4 and 5) and controlled by the gain switching circuit (based on TR1, 2, 3 and 4). The expected control voltages are printed on the circuit diagram.

NOTE 5.
The receiver is being swept over a 1KHz span. Therefore, to observe any of the swept IFs, or 1st LO, use a wide span and/or wide video filter on the external measurement spectrum analyser, to achieve a stable reading.

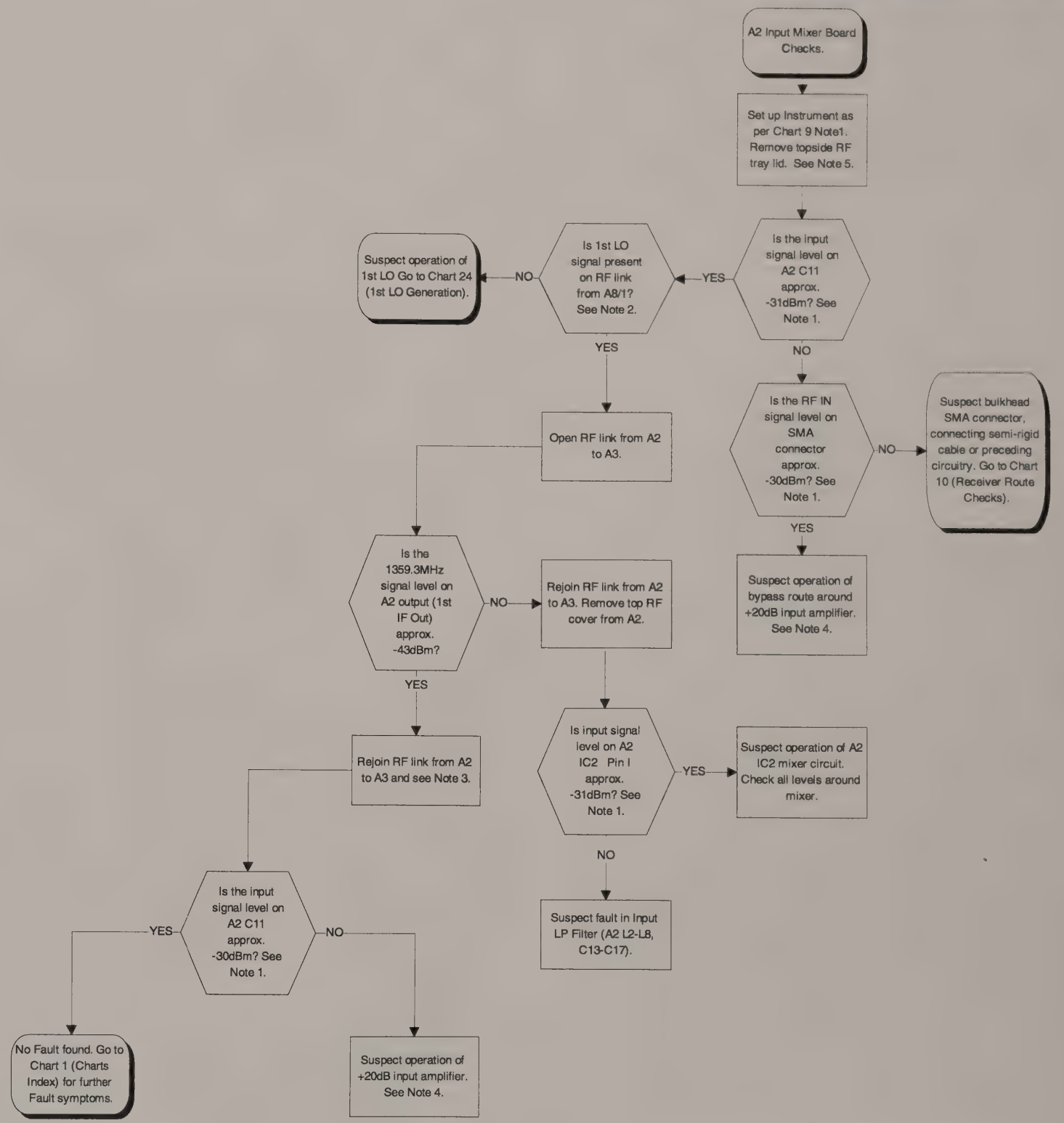

Chart 20
A2 Input Mixer Board Checks

Chart 21
A3 2nd and 3rd Mixer Board Checks

Associated Circuit Diagrams:
Z44991/229 (2948 Interconnections Diagram).
Z44829/923 (A3 2nd and 3rd Mixer Board).
Z44830/103 (A4/1 10.7MHz IF Board).
Z44830/097 (A9/1 2nd and 3rd LO Board).
Z44829/930 (A10 90 MHz Swept LO Board).

NOTE 1.
This is not a true 'dBm' measurement, but simply the signal level measured on a spectrum analyser using a zero loss probe.

NOTE 2.
Both of the 79.3MHz amplifiers have collector loads tuned to the IF frequency of 79.3MHz. The first amplifier (based on A3 TR1) has a gain of approximately 13dB, whilst the second stage (based on A3 TR2,3) has a gain of approximately 14dB.

NOTE 3.
The 79.3MHz Filter based around L2, L3 and L4 is an m-derived filter with a passband centre frequency of 79.3MHz. Additionally, the filter has three tuned rejection notches. L2 sets a notch at 100.7MHz, L3 sets a notch at 84.65MHz and L4 sets a notch at 73.95MHz.

NOTE 4.
The receiver is being swept over a 1KHz span. Therefore, to observe any of the swept IFs, use a wide span and/or wide video filter on the external measurement spectrum analyser.

NOTE 5.
The Isolating Gate prevents the 79.3MHz IF reaching PLA when in SPEC ANA mode. It is controlled by the signal on A3 PLC (+5V DC in SPEC ANA, +5V/0V square wave in Look and Listen).

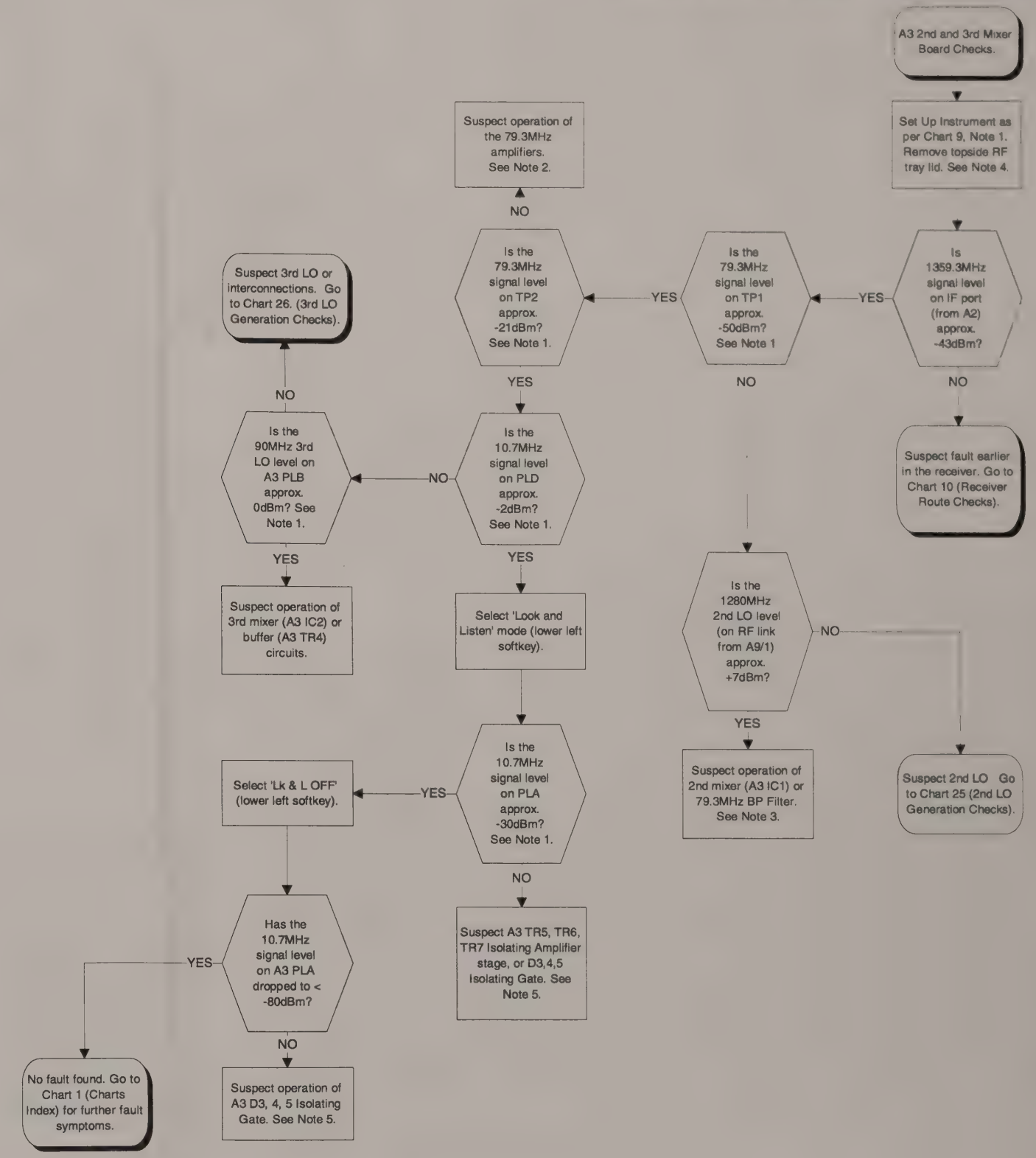

Chart 21
A3 2nd and 3rd Mixer Board Checks

Chart 22
A4/1 10.7MHz IF Board Checks

Associated Circuit Diagrams:
Z44991/229 (2948 Interconnections Diagram).
Z44829/923 (A3 2nd and 3rd Mixer Board).
Z44830/103 (A4/1 10.7MHz IF Board).

NOTE 1.
This is not a true 'dBm' measurement, but simply the signal level measured on a spectrum analyser using a zero loss probe.

NOTE 2.
The receiver is being swept over a 1KHz span. Therefore, to observe any of the swept IFs, use a wide span and/or wide video filter on the external measurement spectrum analyser, to achieve a stable reading.

This Chart may be followed exactly, in which case a CW signal is applied at the front panel and the signal routings on A4/1 are checked. Alternatively, a 10.7MHz swept signal may be applied directly to A4/1 PLA and the Chart followed, but instead of absolute level checks, correct bandwidth checks can be made.
The A4/1 board provides five resolution bandwidths; 300Hz, 3KHz, 30KHz, 300KHz and 3MHz.

The 300Hz, 3KHz and 30KHz filters are effected by crystal filters. The signal routing for these is from A4/1 IC6 to IC1, via D11. From IC1 the signal passes through the crystal filter stages, based around XL3, 4, 5 and 6. After the second crystal filter stage, the TR10 amplifier provides a gain dependant on which bandwidth is selected. From TR15, the signal then passes to the log amp, via the TR18 BP Filter stage.

The 300KHz filter is effected by ceramic filters. The signal routing is from A4/1 IC6 to IC1, via XL1, 2. From IC1 the signal passes to the log amp via the TR17 Line Driver stage and TR18 BP Filter stage.

The 3MHz receiver bandwidth is initially defined to be approx. 3MHz on A3. On A4/1, a final filtering action is performed by the TR18 BP Filter stage. The signal routing for the 3MHz filter is from A4/1 IC6 to the log amp, via D11, IC1, TR17 Line Driver stage and the TR18 BP filter stage.

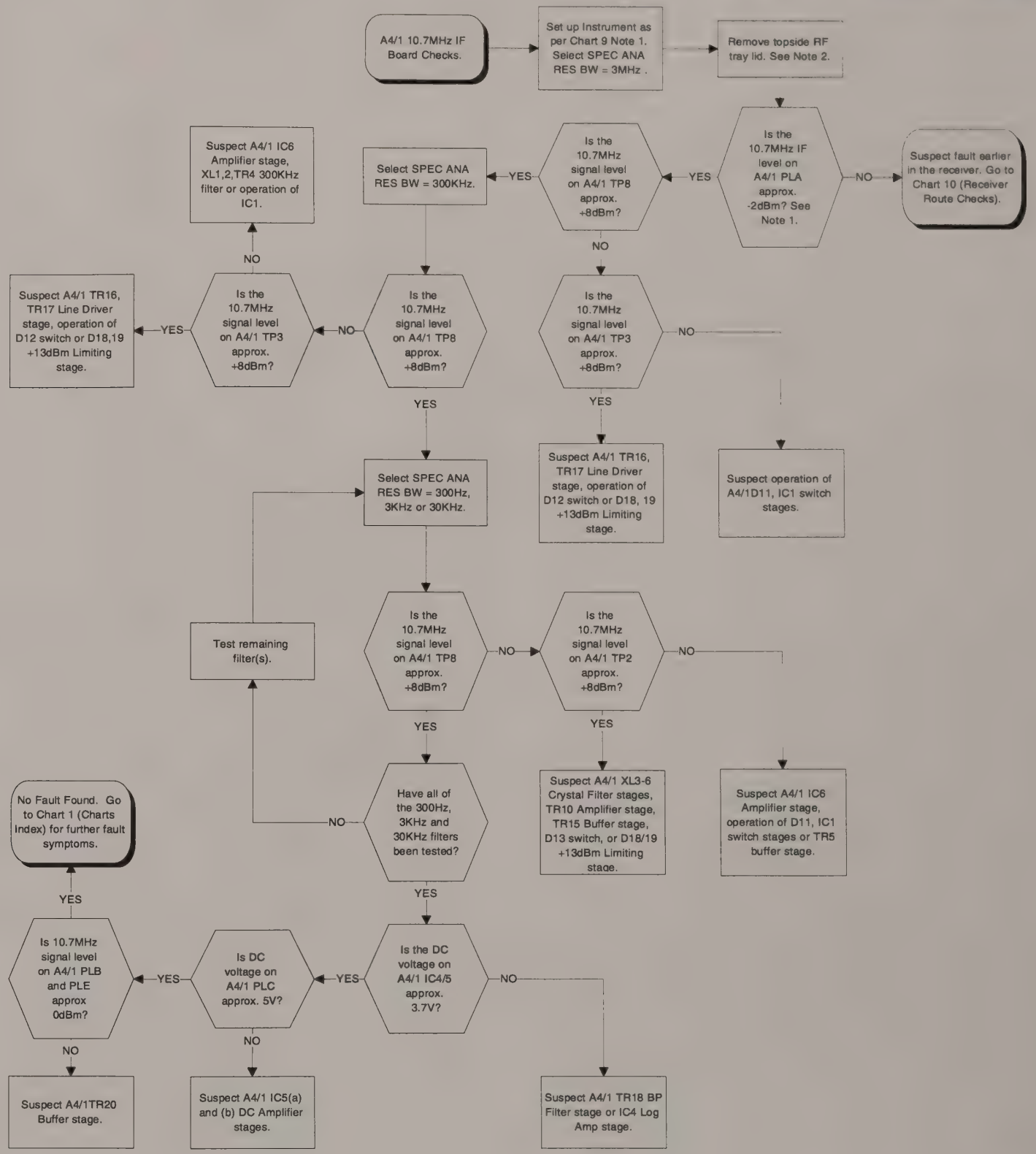

Chart 22
A4/1 10.7MHz IF Board Checks

Chart 23
A6/1 Output Amplifier Board Checks

Associated Circuit Diagrams:
Z44991/229 (2948 Interconnections Diagram)
Z44829/925 (A6/1 Output Amplifier)

NOTE 1.
Select Rx TEST mode. Select required Service Monitor output port. Set desired RF GEN frequency. Ensure RF GEN is ON.
If BNC output is selected, set Service Monitor RF GEN LEVEL=+5dBm. If N-TYPE port is selected, set Service Monitor RF GEN LEVEL=-21dBm.

NOTE 2.
As set up in Note 1, the signal level from A6/1 should be +5dBm for both output ports. Note, that the gain of A6/1 is software calibrated in terms of frequency response and linearity, so the cal figures should be checked if strange results are obtained. An uncalibrated instrument will have a gain roughly 4dB too high.

NOTE 3.
A6/1 is used to amplify over a 10dB dynamic range. Starting with RF GEN LEVELS of +5dBm (for BNC output) or -21dBm (for N-port o/p), the output of A6/1 should reduce smoothly by 10dB as the RF GEN LEVEL is gradually reduced by 10dB. If the RF GEN LEVEL is reduced further, the output of A6/1 will return to the top of its range (+5dBm), as an attenuator is placed in circuit on the output path. Continuing to reduce the RF GEN LEVEL to the bottom of its range will result in this cyclic movement (over the A6/1 10dB range) continuing.

NOTE 4.
The signal from C4 is at the RF GEN FREQ requested on the front panel. The level of the signal is approximately -16dBm across the frequency band.

NOTE 5.
Using an external supply, apply a DC voltage, P, to A6/1 TP2. Vary this voltage between 0V and 1.5V. This will drive the pin diode attenuator and allow the operation of the open loop to be investigated. Increasing P decreases the output level of the requested RF GEN FREQ from A6/1. Use a high impedance zero loss probe to measure RF levels. (Levels quoted are simply those measured on a probe, not true dBm values). Beware the circuit oscillating when probing.

NOTE 6.
In Rx TEST mode, varying the RF GEN LEVEL between +5dBm and -5dBm (for BNC output port), or -21dBm to -31dBm (for N-type port), will operate A6/1 over its 10dB working dynamic range. The resultant RF LEVEL drive from B1 PLD/7 to A6/1 PLB varies between approx. 0.5V and 2.5V.

NOTE 7.
The RF LEVEL (and AM) drive to A6/1 is set by DAC IC27 on B1. The reference voltage (i.e. 'gain') of the DAC is set by the reference voltage derived from the zener diode, B1 D4, using potentiometer R61. The nominal voltage set by R61 is approx. +4.5V, giving -4.5V on TP14, as B1 IC26(d) has unity gain.

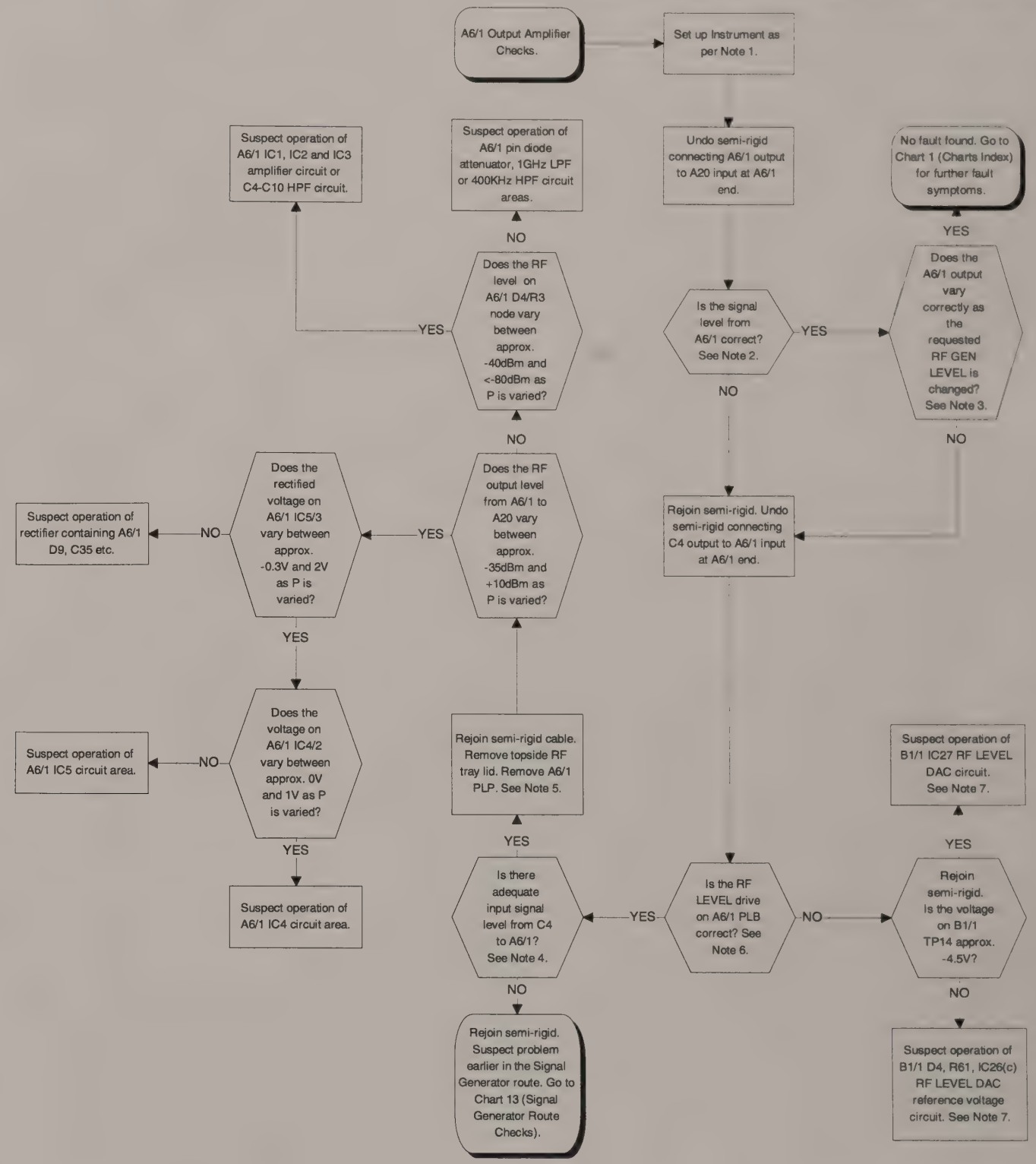

Chart 23
A6/1 Output Amplifier Board Checks

Chart 24
A7/1 and A8/1 1st LO Generation Checks

Associated Circuit Diagrams:
Z44829/922 (A2 Input Mixer Board).
Z44830/111 (A7/1 1st LO Control Board).
Z44830/112 (A8/1 1st LO Board).
Z44830/110 (B2/1 Microprocessor Board).

NOTE 1.
The 1st Local Oscillator (LO) output connection from A8/1 to A2 is made by a copper strip, A8/1 PLE. The LO is at a frequency 1359.3MHz above the receiver frequency (TX FREQ in Tx TEST or the instantaneous frequency of the spectrum analyser). The level of the 1st LO to A2 is approx. +7dBm.

NOTE 2.
The flowchart will now test the operation of the A7/1 and A8/1 phase locked loop when the output frequency is that for a receiver frequency of 100MHz. If setting the receiver frequency to 100MHz restores correct operation, select the faulty receiver frequency and follow the flowchart but with the VCO tuned to (receiver frequency+1359.3MHz) instead of 1459.3MHz and recalculate the expected output frequency from A7/1 IC5/7 when told to check for 729.65MHz.

NOTE 3.
Connect an external DC supply voltage, P, to PLD/2 (connected to daughterboard AA1 VCO TUNE input). Apply an initial voltage of 6.5V. Adjust voltage P between 4V and 8V, such that the RF output on A8/1 TP18 is at an approximate frequency of 1459.3MHz.

NOTE 4.
A portion of the A8/1 VCO output is fed to A7/1 for the phase locked loop divider circuitry. The signal leaves A8/1 on the copper RF link, A8/1 PLF, that connects A7/1 and A8/1 and is at a level of approx. +0dBm.

NOTE 5.
A7/1 IC3 is a programmable frequency divider driven by the fractional-N control chip, A7/1 IC7. Check that IC7 is being written
to and is supplying IC3 data on pins IC7/2, 3, 4, 5, 6, 7, 8, 64, 65, 66, 67.

NOTE 6.
A8/1 IC7(a), IC8(a) and IC9(a)-(d) are configured as a digital phase detector.
A8/1 R25, R26 and C14 form an 'out of lock' indicator. When the loop is locked, there are +5V pulses (biased on 0V) on IC7(a)/6 and IC8(a)/8. When out of lock, *either* IC7(a)/6 *or* IC8(a)/8 will carry a waveform with an *average* 50% duty cycle which is sufficient to turn on A8/1 TR5, which in turn starts the 3Hz oscillator based around A8/1 IC6(c) and (d). This lights the 'out of lock' LED, A8/1 D2 and forces the phase detector so that TP11=0V and TP12=5V which attempts to push the voltage on TP17 to 30V. However, TR5 simultaneously turns on TR7 which clamps the voltage across C22 to 8V, to hold the VCO in the middle of its range. This mechanism thereby attempts to recover the VCO by pushing it to the middle of its frequency range if it is stuck at either end.
Operation of the phase detector can be tested by varying the external voltage, P, such that the output frequency, previously observed on the copper strip, A8/1 PLE, between A8/1 and A2, varies about 1459.3MHz (for 100MHz receiver frequency), whilst verifying the voltages on A8/1 TP11 and TP12 are as follows:

.	VCO O/P < 1459.3MHz	VCO O/P > 1459.3MHz
TP11	0V (with +5V pulses)	5V (with 0V pulses) alternating at 3Hz with 0V (with 5V pulses)
TP12	5V (with 0V pulses)	5V (with 0V pulses) alternating at 3Hz with 0V (with 5V pulses)

NOTE 7.
Amplifier stages A8/1 IC10(a), (b) and (c) form a level dependent amplifier. Apply an external DC voltage to PLD/2 and verify that the voltage on TP7 is approx. as follows:

V(PLD/2)	0V	10V	20V	25V
TP7	0.4V	1.0V	2.2V	3.7V

NOTE 8.

The loop filters are based around A8/1 L3 to L6, IC12 and C23, C24. DC operation of the filters can be tested by varying the external voltage, P, on PLD/2 such that the output frequency, previously observed on the copper strip between A8/1 and A2, A8/1 PLE, varies about 1459.3MHz (for 100MHz receiver frequency), whilst verifying the voltage on A8/1 TP17 is as follows:

VCO O/P < 1459.3MHz	VCO O/P >1459.3MHz
ramps between 8V and 30V	ramps between 8V and 0V

Chart 24
A7/1 and A8/1 1st LO Generation Checks

Chart 25
A9/1 1280MHz 2nd LO Generation Checks

Associated Circuit Diagrams:
Z44991/229 (2948 Interconnections Diagram).
Z44830/097 (A9/1 2nd and 3rd LO Board).

NOTE 1.
There are two 2nd Local Oscillator outputs from A9/1. One leaves A9/1 '2nd LO OUT', PLE, at an approx. level of +7dBm to go to A3 "LO IN" as an LO for the receiver. The other leaves A9/1 PLG at an approx. level of -5dBm to go to C5 SKA as an LO for the signal generator BFO.

NOTE 2.
IC7(a), (b) and IC8(a) to (d) are configured as a four state phase detector. Operation of the phase detector can be tested as follows. Check that as the external voltage, P, is varied such that the A9/1 output (seen on A9/1 '2nd LO Out', PLF) varies about 1280MHz, the following voltages are seen on A9/1 IC8/11:

.	VCO O/P < 1280MHz	VCO O/P > 1280MHz
V(IC8/11)	0V (with 5V pulses)	5V (with 0V pulses)

NOTE 3.
The loop filtering is performed by A9/1 IC9(a). To test the dc operation of the filter, check that as the external voltage, P, is varied such that the A9/1 output (seen on A9/1 '2nd LO Out', PLF) varies about 1280MHz, the following voltages are seen on A9/1 PLK/2:

.	VCO O/P < 1280MHz	VCO O/P > 1280MHz
PLK/2	12V	-12V

NOTE 4.
It is possible that the closed loop characteristic of the phase locked loop is incorrect. Check the loop filter components, the VCO characteristic and the phase detector circuit.

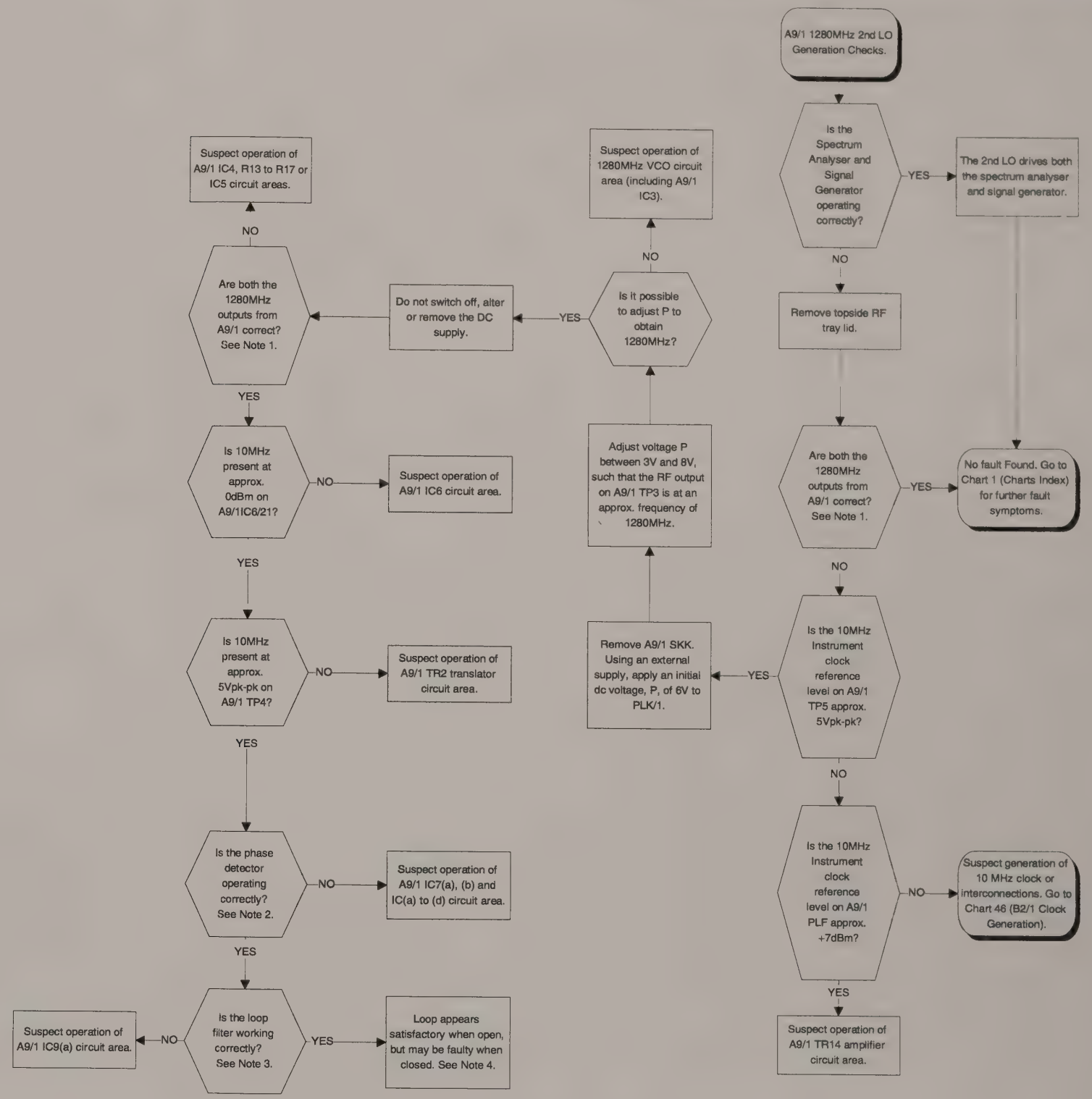

Chart 25
A9/1 1280MHz 2nd LO Generation Checks

Chart 26
A9/1and A10 90MHz 3rd Local Oscillator Checks

Associated Circuit Diagrams:
Z44991/229 (2948 Interconnections Diagram).
Z44830/097 (A9/1 2nd and 3rd LO Board).
Z44829/930 (A10 90MHz Swept LO Board)

NOTE 1.
A9/1 generates a 90MHz reference signal. This leaves A9/1 on PLD at a level of approx. -10dBm and goes to A10 PLB. In normal SPEC ANA mode (L + L off), A10 acts as a slave oscillator which is phase locked to the A9 90MHz reference signal. The output of A10 is also 90MHz, but it is at a level of approx. 0dBm and appears on A10 PLC and goes to A3 PLB.

NOTE 2.
IC12(a) and (b) and IC8(a) to (d) are configured as a four state phase detector. This is followed by IC14(a) which performs the loop filtering. Operation of both circuits can be tested as follows. Check that as the external voltage, P, is varied about 90MHz, the following voltages are seen on A9/1 IC13/6 and PLM/2 :

.	VCO O/P < 90MHz	VCO O/P > 90MHz
V(IC13/6)	5V (with 0Vpulses)	0V (with 5V pulses)
V(PLM/2)	-12V	+12V

NOTE 3.
It is possible that the closed loop characteristic of the phase locked loop is incorrect. Check the loop filter components, the VCO characteristic and the phase detector circuit.

NOTE 4.
Remove the connection to A10 PLA/6 and then attach PLA/6 to ground (0V). This opens IC3(a) and hence opens the loop. Using an external supply, apply an initial DC voltage, Q, of 5V to A10 TP3.

NOTE 5.
A10 IC2 is an active "Gilbert Cell" mixer configured as a phase detector. The differential outputs are low pass filtered and made single-ended by the IC1(b) op amp circuit. Operation of the phase detector can be tested as follows. The outputs on pins 3 and 14 of A10 IC2 carry the difference frequency between the 90MHz reference and the nominal 90MHz fed back A10 output frequency. Therefore, the output frequency from IC1(b)/7 will be zero when the A10 output is exactly 90MHz (w.r.t. Instrument reference frequency). Hence, check that as Q is varied, the frequency of the 5Vpk-pk distorted sine wave seen on A10 IC1(b)/7 approaches DC (i.e a few 10's of KHz) when the A10 90MHz output (seen on A10 PLC) passes through 90MHz.

NOTE 6.
Must remove the board from the chassis to gain access to the underside components. A ground connection must be made to the board for it to operate whilst 'hinged out', as no connection is made through A10 PLA.

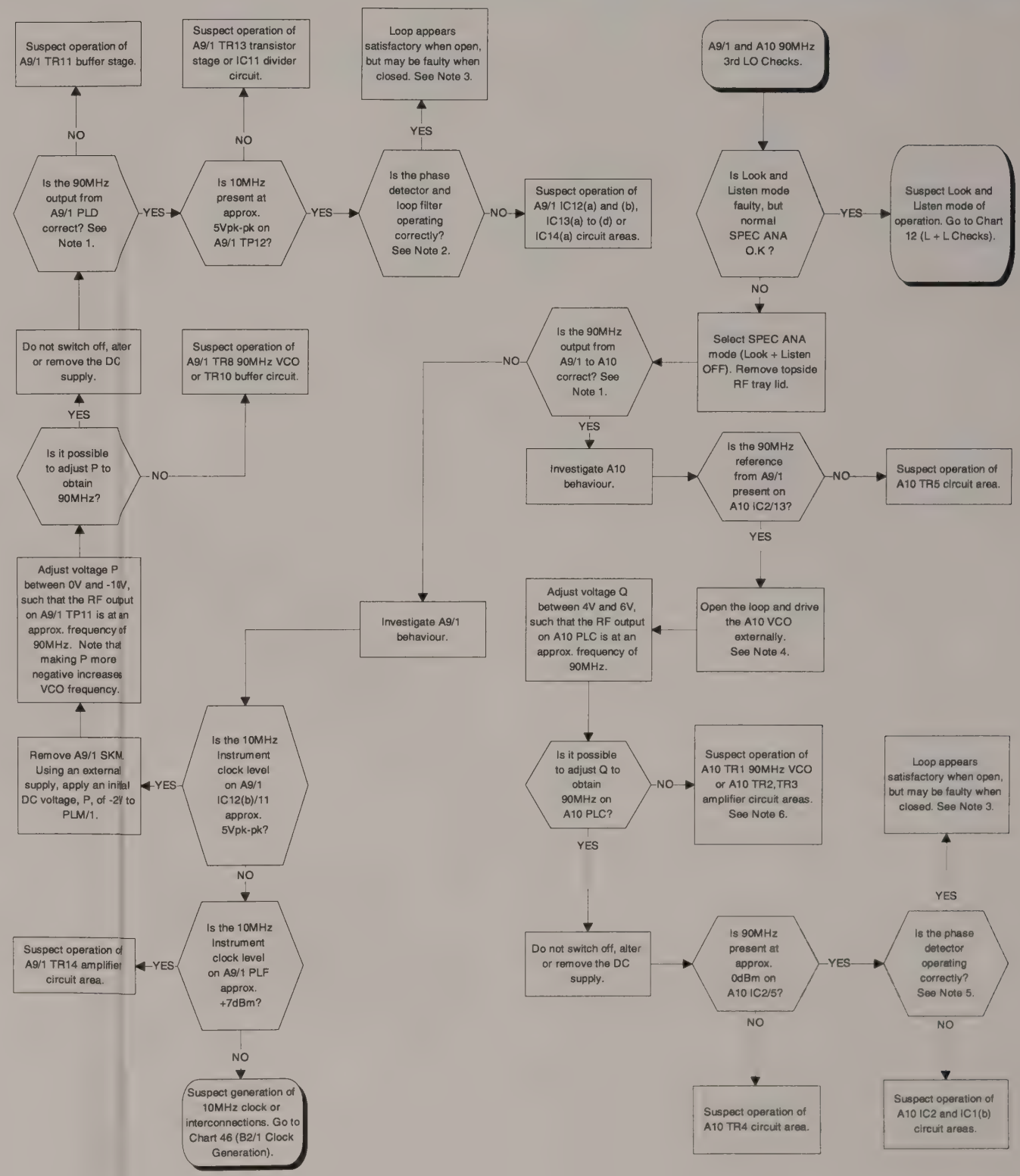

Chart 26
A9/1 and A10 90MHz 3rd Local Oscillator

Chart 27
A11/1 Input Switching Board Checks

Associated Circuit Diagrams:
Z44991/229 (2948 Interconnections Diagram).
Z44829/163 (A11/1 Input Switching Board).

NOTE 1.
Select SPEC ANA mode. Select ANTENNA input port. Set SPEC ANA REF LEV = 0dBm. Apply a 100MHz CW signal at 0dBm to the ANTENNA port.

NOTE 2.
The A11/1 ANTENNA input is that input leading to RLD.
The A11/1 BNC output is that between RLB and the Output Attenuator A20.

NOTE 3.
The N input/output is the central of the three A11/1 inputs and leads to the resistive splitter.

NOTE 4.
The Rx input is that leading to the A21 attenuator, via a semi rigid cable soldered to A11/1.

NOTE 5.
Remove 100MHz input to N port. Select Rx TEST mode. Select BNC output port and place a 50ohm termination on the port. Set RF GEN FREQ = 100MHz and LEVEL = 0dBm.

NOTE 6.
The A11/1 Signal Generator port is the input adjacent to RLE and the Output Attenuator A20.

NOTE 7.
Select N-Type output port. Transfer termination to N port. Set RF GEN LEV = -36dBm.

NOTE 8.
The Broadband Power Meter is on Sheet 2 of the A11/1 circuit diagram and its operation is as follows. The RF input is detected by the D10(b) RF Detector cct. This is then compared (using IC1) with a 25KHz signal detected by the D10(a) LF Detector cct. The level difference signal generated by IC1 drives the IC3,4 AGC Amplifier which amplifies a reference 25KHz signal applied on A11/1 PLA/5. Thus, under the closed loop mechanism, the AGC amplifier generates a LF signal of equal level to the input RF Signal, under the control of IC1. The resultant LF signal is then buffered to PLC, before passing to B1/2 for measurement.

When faultfinding, check for the presence of the reference 25KHz signal on A11/1 PLA/5 and the presence of detected signals on IC1/2 and 3. The AGC can be checked by driving it via an external DC source (-8V to -10V), by lifting A11/1 R37 and driving it through R37.

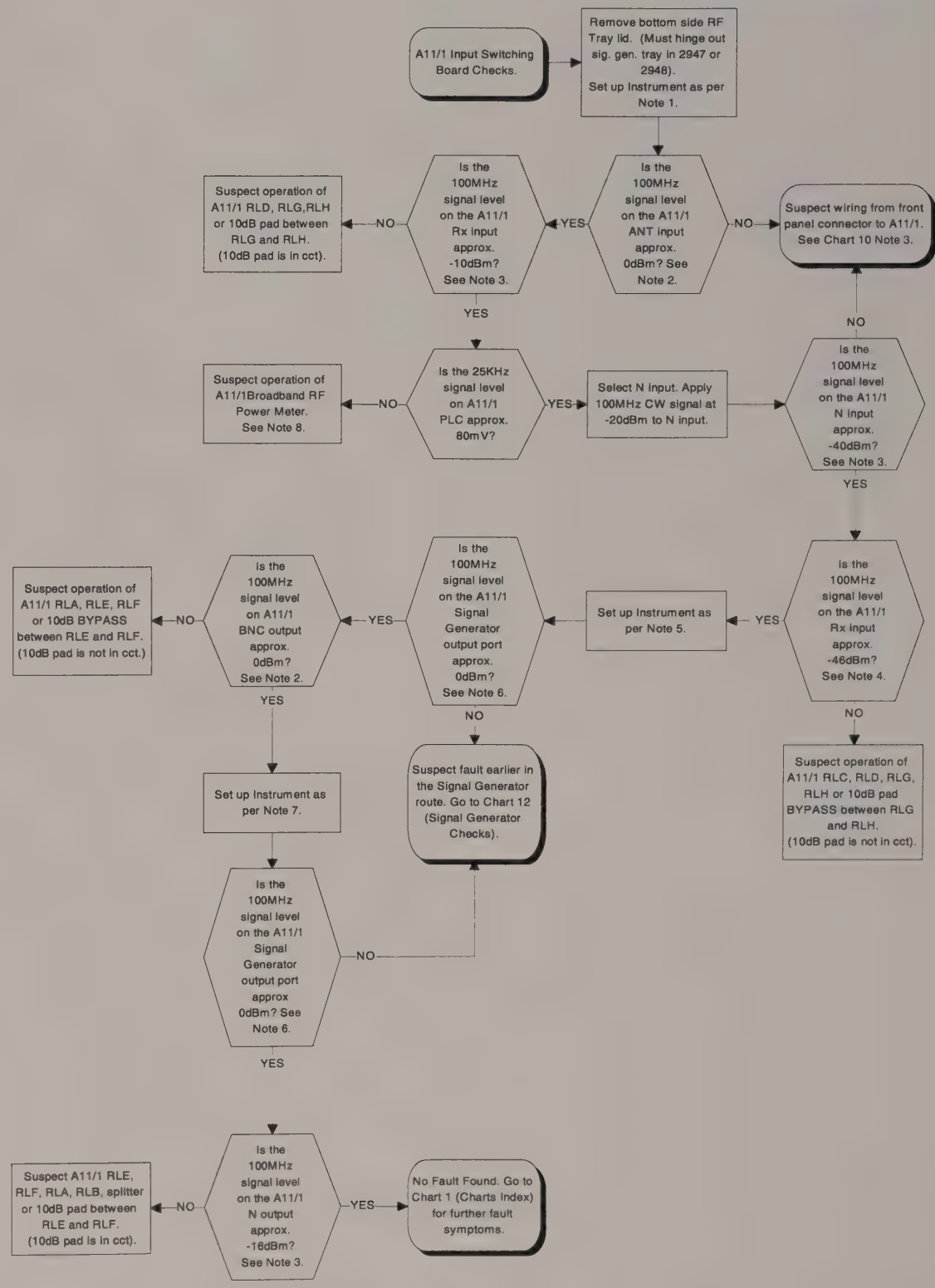

Chart 27
A11/1 Input Switching Board Checks

Chart 28
A15 SSB Board Checks

Associated Circuit Diagrams:
Z44830/103 (A4/1 10.7MHz IF Board).
Z44830/180 (B1/2 Audio Processor Board).
Z44830/110 (B2/1 Microprocessor Board).

NOTE 1.
Select Tx TEST, with TX FREQ = 300MHz. Select SSB from MOD METER menu, with MEDIUM Rx sensitivity. Select NB power meter from the Tx POWER menu. Apply an external 300.001MHz signal at 0dBm with no modulation to the ANT input. Hinge out signal generator RF tray. To do this, the semi-flexible RF cables from C4 to A6 and from A9/1 to C5 must be unscrewed from the sig. gen. tray and the memory card must be removed. Remove bottomside RF tray lid (adjacent to A20 attenuator).

NOTE 2.
A15 TR1 is configured as an amplifier, controlled by the IC4(a) and (b) AGC circuit. The AGC circuit is designed to cope with an IF input range on A15 PLA/1 between -50dBm and +10dBm. The corresponding drive voltage on the gate of TR1 is approx. -1V (TR1 low gain), to +1V (TR1 high gain). The circuit around IC4(a) simply provides a fast attack and slow decay characteristic to the AGC to improve the circuits performance when dealing with intermittent signals (e.g. human speech). Since the AGC is a closed loop system, its failure can be due to a fault in either the forward or reverse sections of the loop.

To aid faultfinding, lift C19 and inject a 1KHz signal at approx. 500mVpk-pk into the AGC and vary its level, whilst looking for a change in the RF signal level on IC1/1. IC1 expects to see around -35dBm.

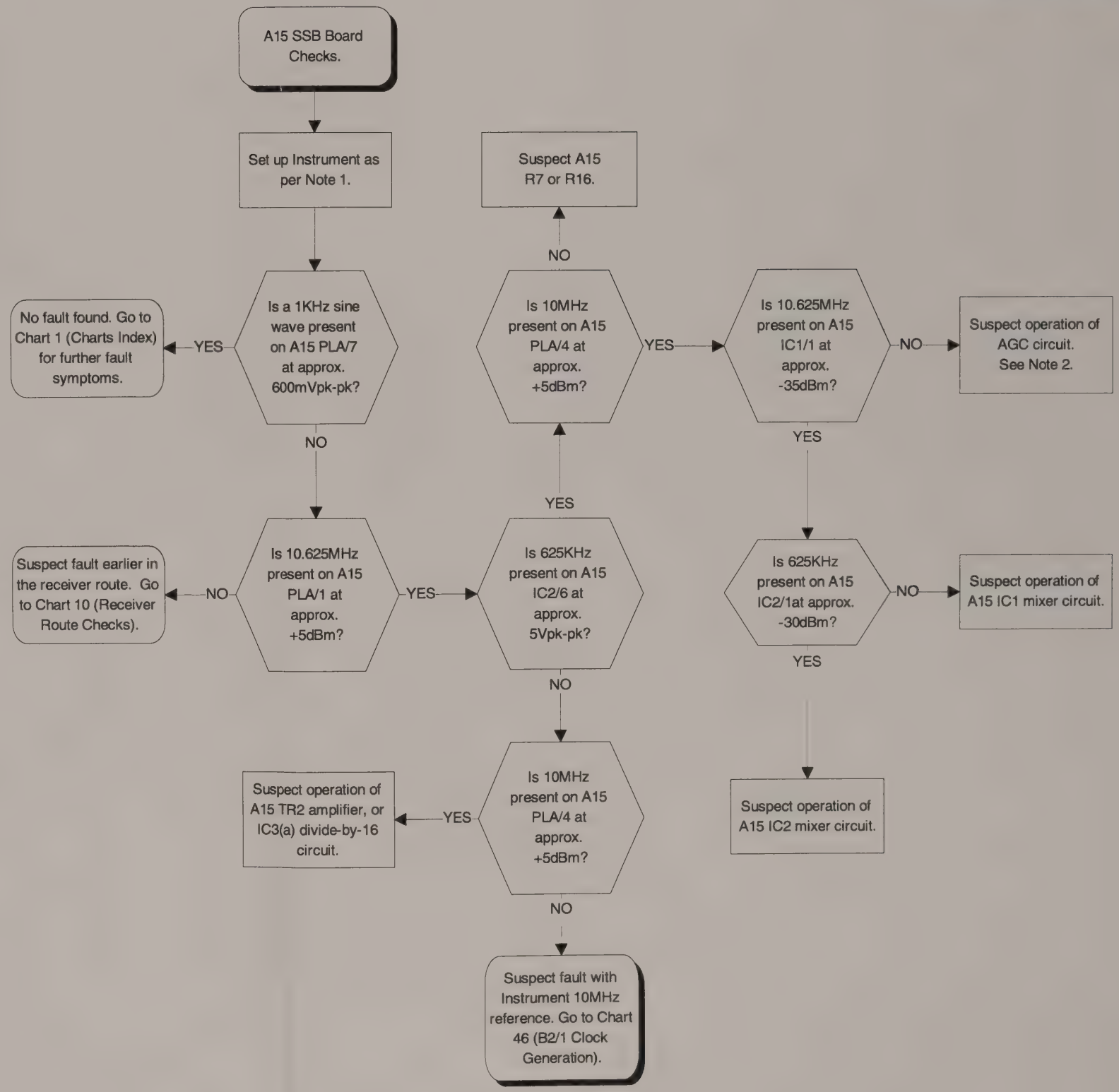

Chart 28
A15 SSB Board Checks

Chart 30
A20/A21 Attenuator Checks

Associated Circuit Diagrams:
Z44991/229 (2948 Interconnections Diagram).
Z44829/891 (A20 Output Attenuator).
Z44829/892 (A21 Input Attenuator).
Z44830/110 (B2/1 Microprocessor Board).

NOTE 1.
Unscrew attenuator from chassis (two screws). To gain access in a 2947 or 2948, the sig. gen tray must be hinged out. Connect a signal/tracking generator to the attenuator input. For A20, the input connector is the one connected to A6/1 in the topside RF tray by a semi rigid cable. For A21, the input connector is the one connected to A11/1 in the bottom side RF tray via a semi rigid cable.
Connect a spectrum analyser to the attenuator output.

NOTE 2.
For A20 connect +5V to PLA/2 and for A21 connect +5V to PLA/4.

NOTE 3.
Both attenuators consist of resistive pads that may be selected or bypassed by relays. One end of the relay coils is supplied with a constant +5V and the relay is then driven by applying a 0V pulse to the other end of the appropriate coil. This can be performed manually to check the operation of the relay. Connect +5V to A20 PLA/2, or A21 PLA/4 and then simply touch 0V on the appropriate pin as indicated in Table 1. Note the attenuator input signal level from the signal/tracking generator and check that the measured output level from the attenuator agrees with Table 1.

TABLE 1 ATTENUATOR DRIVE CONFIGURATION.

ATTN.	A20 PLA		A21 PLA	
PAD.	IN	OUT	IN	OUT
20dB	7	5	7	5
40dB	3	1	3	1
40dB	10	8	-	-

NOTE 4.
To drive the input attenuator, see Chart 11 Note 2. To drive the output attenuator, see Chart 15 Note 5. Under normal operation, it is very difficult to observe the pulldown pulse generated by B2/1 TR12-17. To aid observation, remove the attenuator drive cable from B2/1 PLL and load the relevant PLL output with a 2K7 resistor to +5V. Select the attenuator and check that the resistor is pulled low for approx. 40mS. The outputs are labelled on the B2/1 circuit diagram.

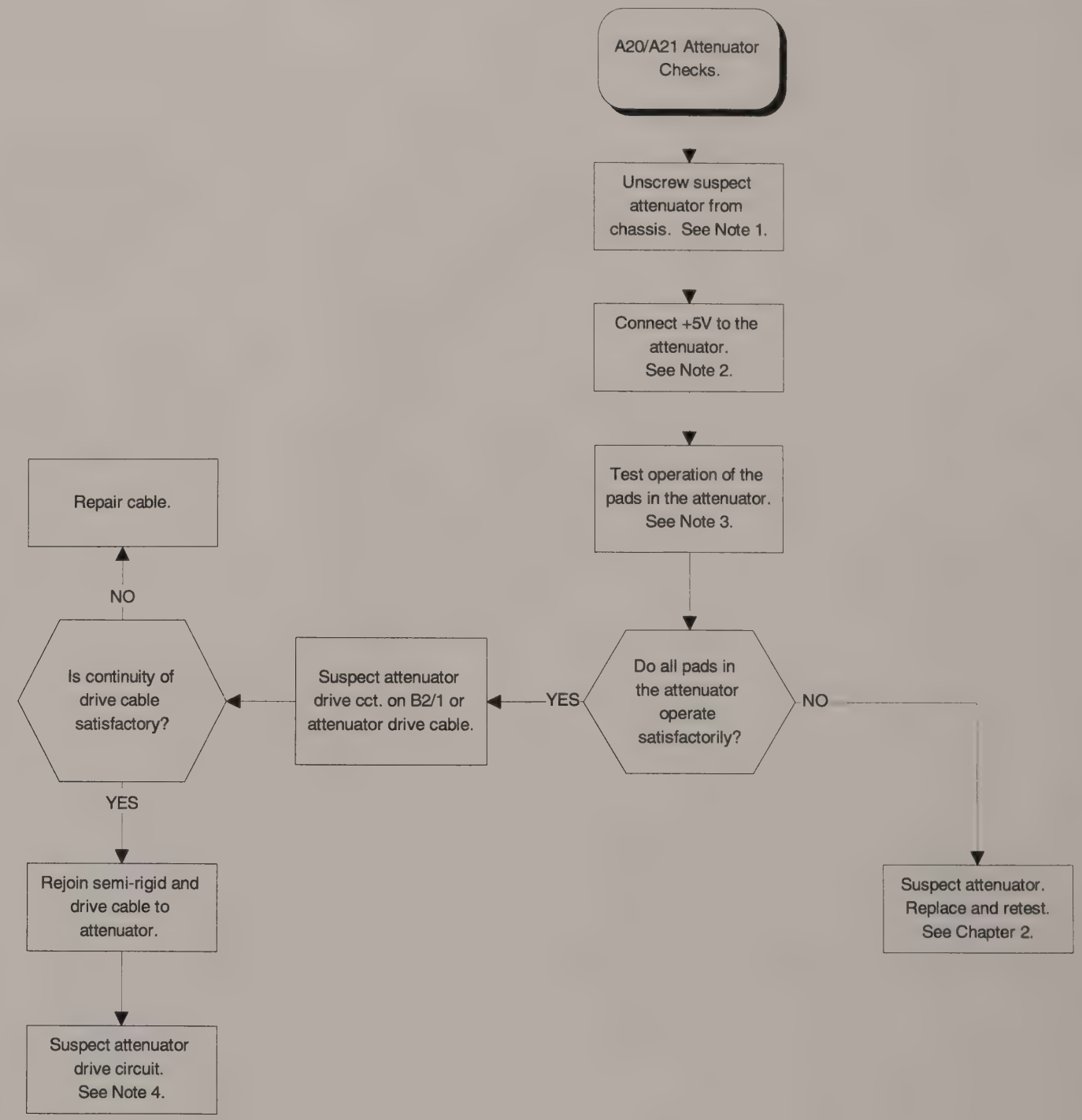

!! CONSULT 'ACCESS AND LAYOUT' CHAPTER 2 BEFORE REFITTING A20 ATTENUATOR !!

Chart 30
A20/A21 Attenuator Checks

Chart 40
B1/2 Audio Generator Checks

Associated Circuit Diagrams:
Z44991/229 (2948 Interconnections Diagram).
Z44830/180 (B1/2 Audio Processor Board).

NOTE 1.
Both AF GEN1 and AF GEN2 can be output directly from the AF OUT socket on the front panel, or used as modulation generators MOD GEN1 and MOD GEN2 for the signal generator. Additionally, in Look and Listen mode, AF GEN2 is reserved as the sweep waveform for the swept 90MHz 3rd LO.

NOTE 2.
Select AF TEST mode, Tones, DCS, Tone off, Return. Ensure the faulty AF GEN ON. Select only one GEN and enter the parameters AF GEN FREQ=1KHz, LEVEL=1Vand AF GEN SHAPE = Sin.

NOTE 3.
B1/2 IC1 and IC2 gate arrays are, essentially, configured as accumulators. The main processor loads the relevent gate array with an 'increment value', via the 8 bit bus D0 to D7, which is added to the accumulator total. The accumulator counts monotonically, returning through zero when full scale is reached. Hence, the increment value determines the output frequency. The gate arrays are clocked with a 1MHz clock on pin 51. Functionality of the gate arrays can be ascertained by checking for 5V square wave activity on output pins 7, 29 to 34 and 37 to 42.

NOTE 4.
B1/2 IC3 and IC4 are EPROMs that are programmed as look up tables for the relevent AF GEN shape. As the 13 bit binary number supplied by the gate arrays increment from zero to full scale, the 8 bit output words from the EPROMs represents the output level (or 'shape') for one period of the audio waveform. Functionality of the EPROMs can be ascertained by checking the outputs on pins 11 to 19 for somewhat random 5V square wave activity.

NOTE 5.
B1/2 IC5 and IC6 convert the EPROM outputs to analogue voltages. Their reference voltages are set by B1/2 R2, such that the voltage on TP1 should be 5.86V. The analogue outputs can be observed on B1/2 IC9/6 and IC10/6.

NOTE 6.
Switches B1/2 IC13(a) to (d) direct the required AF GEN signal(s) to the AF OUT driver circuit, via resistors that set the gain of IC19 to either 0.2 or 2, depending on the level range that is being used. IC19 AF Driver is protected against damage from low impedance loads by solid state fuses R90 and R91.

Once tripped, the instrument must be turned off and left for 1 minute to reset the fuses.

Chart 40
B1/2 Audio Generator Checks

Chart 41
B1/2 AM Demodulation Checks

Associated Circuit Diagrams:
Z44991/229 (2948 Interconnections Diagram).
Z44830/180 (B1/2 Audio Processor Board - Sheets 5,7 and 8).

NOTE 1.
Select Tx TEST mode with AM DEMOD selected with AF FILTER = 0.3 TO 3.4KHz and SINAD = Off. Remove connector from B1/2 PLF and apply a 10.7MHz input signal modulated with 1KHz, 80% A.M. at a measured level of -50dBm to PLF/2. Select [Tx Freq], [Tx Freq], [Return], [Tx Power], [In Pwr], [Return]. Turn SQUELCH off (rotate knob fully anticlockwise).

NOTE 2.
Select SPEC ANA Look and Listen mode with AM DEMOD selected with AF FILTER = 0.3 to 3.4KHz and SINAD = Off. Remove connector from B1/2 PLG and apply a 10.7MHz input signal modulated with 1KHz, 80% AM at a measured level of -50dBm to PLG/2.

NOTE 3.
The AM Demodulator, IC101, achieves demodulation by mixing the AM input signal with a limited version of the input signal derived from IC102. The output contains the required demodulated audio signal, an RF component at the carrier frequency and its harmonics and a DC. component which is proportional to the carrier level. The outputs have the RF removed by C127 and C128 and are then made single ended by IC103(b).

NOTE 4.
The 50KHz filter is approximately a 3rd order Butterworth LPF with a notch at 170KHz. IC108(d) provides a gain of x5.5.

NOTE 5.
Remove the link between TP123 and TP124. Apply an external DC voltage, P, of 1.5V to TP123 and adjust P to obtain a 10.7MHz level of -68dBm on B1 IC100/1.

NOTE 6.
There is a PIN diode attenuator and PIN diode switch in both the B1/2 PLF (Tx TEST) and PLG (Look and Listen) input paths. The two paths combine at IC100/1. Under these conditions, both the PIN diode attenuators (D100-102 and D103-105) should have approx. 20dB loss. However, the 10.7MHz signal will only reach IC100/1 from one path dictated by the relevent switch (D106-108 or D109 to D111). The AGC operates over the input range 0dBm to -60dBm for corresponding control voltages on TP123 of -2V to +10V. IC100 has a gain of approx. 30dB.

NOTE 7.
The loop may be unstable when closed. Recheck operation of the loop, whilst varying P. Pay particular attention to signal shapes and the loop filter characteristics.

NOTE 8.
The AGC comparator B1/2 IC103(a) compares the demodulator d.c. output level with the reference voltage on IC103(a)/3 set by IC104(a). It can be tested by checking that when the external 10.7MHz input signal on B1/2 PLG/PLF is reduced to -60dBm the voltage on TP124 = +11.5V and when it is raised to -40dBm, the voltage on TP124 = -11.5V.

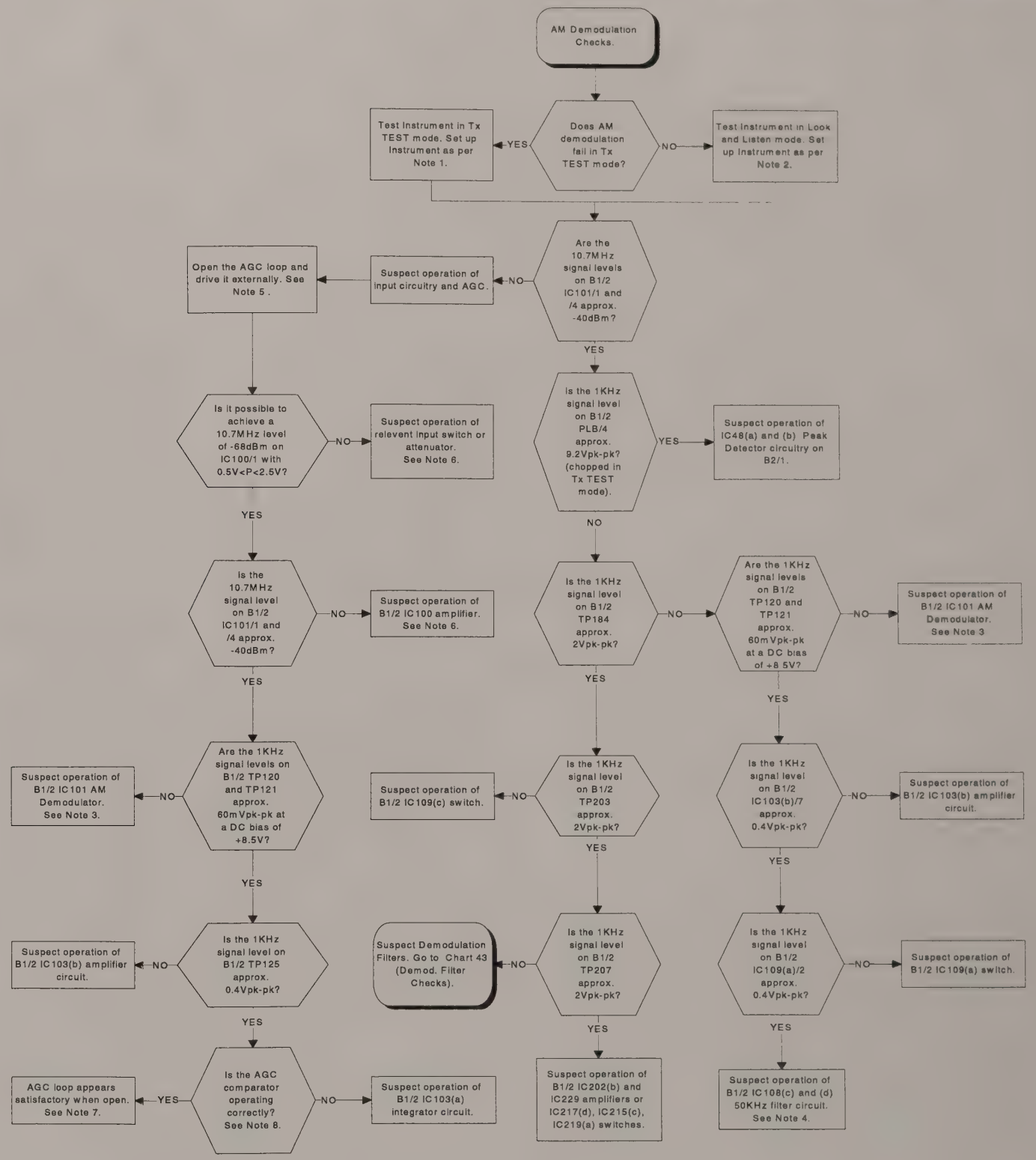

Chart 41
B1/2 AM Demodulation Checks

Chart 42
B1/2 FM Demodulation Checks

Associated Circuit Diagrams:
Z44991/229 (2948 Interconnections Diagram).
Z44830/180 (B1/2 Audio Processor Board - Sheets 5,7 and 8).

NOTE 1.
Select Tx TEST mode with FM DEMOD selected with AF FILTER = 0.3 TO 3.4KHz and SINAD = Off. Remove connector from B1/2 PLF and apply an unmodulated 10.7MHz input signal at a measured level of -50dBm to PLF/2. Select [Tx Freq], [Tx Freq], [Return], [Tx Power], [In Pwr], [Return]. Turn SQUELCH off (rotate knob fully anticlockwise).

NOTE 2.
Select SPEC ANA Look and Listen mode with FM DEMOD selected with AF FILTER = 0.3 to 3.4KHz and SINAD = Off. Remove connector from B1/2 PLG and apply an unmodulated 10.7MHz input signal at a measured level of -50dBm to PLG/2.

NOTE 3.
The B1/2 IC108(c) and (d) 50KHz filter is approximately a 3rd order Butterworth LPF with a notch at 170KHz. IC108(d) provides a gain of x5.5. B1/2 R181 sets the FM Level Gain.

NOTE 4.
Remove the link between TP123 and TP124. Apply an external DC voltage, P, of 12V to TP123.

NOTE 5.
There is a PIN diode attenuator and PIN diode switch in both the B1/2 PLF (Tx TEST) and PLG (Look and Listen) input paths. The two paths combine at IC100/1. In FM demodulation mode the PIN diode attenuators (D100-102 and D103-105) should have approx. 0dB loss, as it is desirable to limit the signal. The AGC is forced into a maximum gain state in FM mode by the IC104(a) control voltage acting on IC103(a). However, the 10.7MHz signal will only reach IC100/1 from one path dictated by the relevent switch (D106-108 or D109 to D111).

NOTE 6.
The AGC comparator B1/2 IC103(a)/1 output should be +12V, as IC103(a) is forced into a maximum gain state by IC104(a) to set the AGC gain to maximum. This is desirable as it limits the 10.7MHz FM input signal.

NOTE 7.
The FM demodulator is a dual monostable that generates fixed length pulses for each cycle of the 700KHz input IF signal. Hence, the higher the input signal frequency, the closer the pulses and the greater the average output voltage.

Chart 42
B1/2 FM Demodulation Charts

Chart 43
B1/2 Demodulation Filter Checks

Associated Circuit Diagrams:
Z44830/180 (B1/2 Audio Processor Board - Sht. 8)

NOTE 1.
Operation of the 50KHz LP AF Filter is covered in Chart 41 or 42. Go to the relevent chart (depending whether in AM mode or FM mode) if the 50KHz filter is suspected.
Otherwise, select Tx TEST mode with TX FREQ=100MHz. Set Mod Meter to FM with IF Filter=300KHz, AF Filter=0.3 to 3.4KHz, Distortion=off and Deemphasis=off. Select the ANTENNA input port and apply a 100MHz signal at 0dBm, with 1KHz FM and deviation of 50KHz.

NOTE 2.
B1/2 IC221 is a 4th order Butterworth switched capacitor filter, whose cut off frequency is determined by the clock frequency on pin 2. It performs the 300Hz, 3.4KHz and 15KHz LPF functions. The cutoff frequency is 1/50 the applied clock frequency. However, input signals close to the clock frequency will alias through the filter. This is a problem when the cutoff frequency is 300Hz, as the clock frequency is then 15KHz which lies in the audio band. For this reason, the anti-alias filter based around B1/2 IC220(a) has a switchable low pass cut-off frequency of 800Hz or 50KHz. The 800Hz cut-off frequency is used when in 300Hz LP mode.

Filter Cutoff	Clock Frequency
300Hz	15KHz
3.4KHz	170KHz
15KHz	740KHz

NOTE 3.
The clock frequency for the switched capacitor filter B1/2 IC221 is generated by the phase locked loop VCO, B1/2 IC224. The VCO output is divided in frequency by cascaded binary counters IC226 and IC227. The division rate is programmed via the microprocessor data lines to pins 1, 9, 10 and 15 on both devices. The divided output phase is then compared to a 5KHz reference supplied to B1/2 IC224/14. B1/2 R296 and C298 form the PLL loop filter. C297, R295 determine the VCO operating range up to 100KHz and C297, R295 parallel R315 determine the VCO operating range between 120KHz and 1MHz.
If the PLL is faulty, check for the presence of the 5KHz reference signal at 5Vpk-pk on IC224/14. Then determine whether the VCO has any output frequency at all. If it does, either the dividers are faulty, or the phase comparator in IC224 is at fault.

NOTE 4.
B1/2 IC209(b) is a 2nd order Low Pass Filter which filters out the switched capacitor clock frequency. It has two selected cutoff frequencies to cover a 15KHz to 750KHz clock range:
IC219(c) and (d) open gives a cutoff = 32KHz.
IC219(c) and (d) closed gives a cutoff = 1KHz.

NOTE 5.
The filters have worked at the audio frequencies used in this chart (i.e. in the passband). To verify the filter frequency responses, the chart can be repeated using suitable audio frequencies for each filter. Alternatively, Remove link from B1/2 TP204 and inject an audio tracking generator into TP204 and see the swept response on a spectrum analyser.

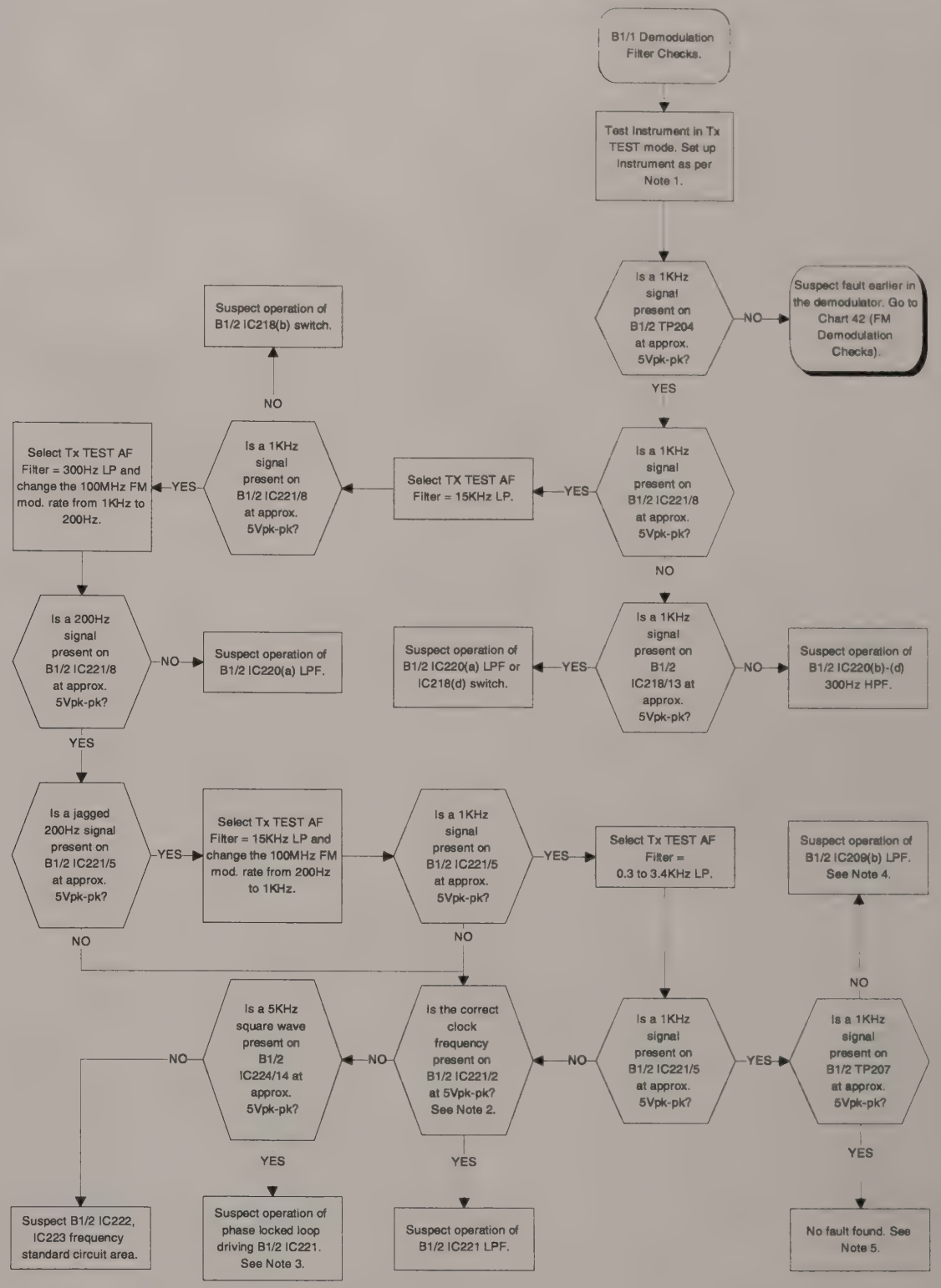

Chart 43
B1/2 Demodulation Filter Checks

Chart 45
B2/1 Processing of Log Amp Signal Checks

Associated Circuit Diagrams:
Z44991/229 (2948 Interconnections Diagram).
Z44830/103 (A4/1 10.7MHz IF Board).
Z44830/110 (B2/1 Microprocessor Board).

NOTE 1.
Hinge out the B1/2 and B2/1 circuit boards. Remove B2/1 PLT and apply a DC voltage of 4V to PLT/2. Select SPEC ANA mode with REF LEVEL=0dBm. Select ANTENNA port.

NOTE 2.
The input attenuators provide changes in receiver sensitivity in 10dB steps. To obtain the 0.5dB REF LEVEL resolution between these steps, the log amp signal is artificially lifted by summing it with the voltage on B2/1 TP23 using IC72(c). With ANTENNA input selected and a REF LEVEL of 0dBm, however, no lift is applied. The voltage on TP23 should be 0V. (Max. lift would make TP23 -1.9V). The voltage on IC72(c)/10 is the video filtered input voltage from PLT. The signal is first attenuated by R219 to R221 by 1/1.32. Hence, the voltage, in this case, on IC72(c)/10 should be 3.03V. The video filters, based around TR26 to TR29 have cut off frequencies of 19.8KHz, 3KHz, 650Hz and 96Hz respectively. They are used for SPEC ANA IF Filter settings of 300KHz, 30KHz, 3KHz and 300Hz respectively.

NOTE 3
The transfer function for B2/1 IC72(c) is Vout = (1.32 x V(+)) - (0.32 x V(tp23)). Therefore, the voltage on B2/1 IC72(c)/8 should be 4V.

NOTE 4.
In 10dB/DIV mode, switch B2/1 IC71(b) is open, giving the transfer function for B2/1 IC72(d) of Vout = V(IC72/8). Therefore, the voltage on B2/1 IC72(c)/14 should be 4V.

NOTE 5.
In 2dB/DIV mode, switch B2/1 IC71(b) is closed, giving the transfer function for B2/1 IC72(d) of Vout = (3.32 x V(IC72/8)) -11.6. Therefore, the voltage on B2/1 IC72(c)/14 should be 1.7V.

NOTE 6.
When using the ANTENNA port, changing the REF LEVEL from 0dBm to 0.5dBm places a further 10dB of attenuation in the receiver input and so the log amp signal is artificially raised by 9.5dB. The voltage on B2/1 TP23 should now be -1.9V. This is negatively summed with the log amp voltage by B2 IC72(c).

NOTE 7.
Hinge out the B1/2 and B2/1 circuit boards. Remove the connector from B2/1 PLT. Connect a tracking generator to PLT/2 (making a 0V connection anywhere that is convenient on the B2/1 board). Using a suitable probe, observe the swept frequency response on B2/1 IC72(c)/10.

NOTE 8.
The video filter cutoff frequency automatically varies according to which RES BW is selected. Using the table below, verify that each of the filters (placed in circuit by B2/1 TR26 to TR29) has the correct response.

Filter Selected	RES BW	Cut Off Frequency
TR29 / C125	300Hz	96Hz
TR28 / C124	3KHz	650Hz
TR27 / C123	30KHz	3KHz
TR26 / C122	300KHz	19.8KHz

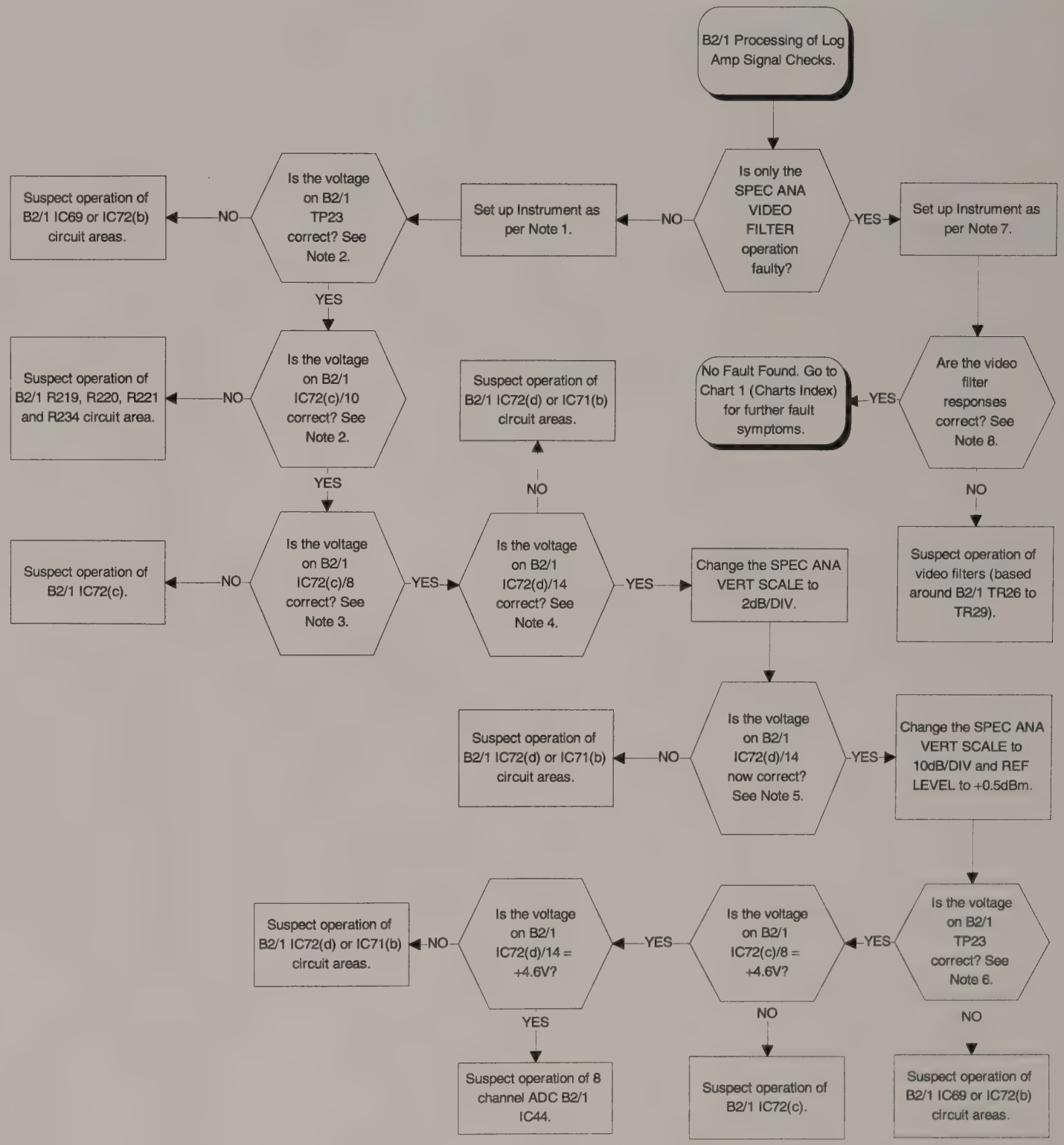

Chart 45
B2/1 Processing of Log Amp Signal Checks

Chart 46
B2/1 10MHz Clock Generation and Distribution

Associated Circuit Diagrams:

Z44991/229 (2948 Interconnections Diagram).
Z44830/110 (B2/1 Microprocessor Board).

NOTE 1.
The frequency pulling range of the OCXO is ±150Hz for the 5V control voltage range. Therefore its output frequency should be very close to 10MHz regardless of the steering voltage applied to its control pins. The output is a 5V pk-pk square wave which can be observed on B2/1 PLB/1.

NOTE 2.
The external standard (when supplied) enters B2/1 on PLA/2 and may be 1,2,5 or 10MHz. It is buffered by B2/1 TR2 and IC82(e) onto TP1. B2/1 IC1 is a PAL, whose reference frequency is provided by IC3(b)/10 in the Instruments internal reference loop. The external standard passes directly to IC1/3, but also via IC3(a), a dual 4 bit counter, which provides a further half, fifth and tenth of the standard to pins 4,5 and 6 of IC1. Given the Instrument reference, IC1 is able to decide the frequency of the external standard and chooses the relevant straight or divided version, such that its output frequency on pin 13 is always 1MHz. This 1MHz signal is then divided by 8 by IC5(a) to give a 125KHz signal, which is compared to the 125KHz divided frequency standard output from IC3(b)/13. IC4(b) acts as a phase detector.
When no external standard is present, the voltage on IC4(b)/4 is 0V.

NOTE 3.
The voltage on PLB/5 is the OCXO control voltage. It is the sum of the filtered output from B2/1 IC4(c) and the frequency standard calibration control voltage from IC75(c). The frequency standard control voltage is generated by the dual DAC, B2/1 IC51. The output from IC75(a) represents the COARSE control and that from IC75(b) the FINE control. Both vary between 0 and -5V, as the COARSE and FINE values are adjusted in the FREQ STANDARD CAL screen. Their relevent weights are set by R12 and R14. The COARSE control is capable of changing the OCXO between the full range of 0V and 5V and so its operation and value should always be checked if the voltage on PLB/5 is greater than 1V from 2.5V

NOTE 4.
The operation of the 20MHz phase locked loop will now be checked. B2/1 IC7 is a phase locked loop chip containing the phase detector and VCO. R16 is removed to break the loop. Connect the R16/ R17 node to 0V. IC7 should then oscillate at (very) approx. 20MHz, to allow fault finding to proceed.

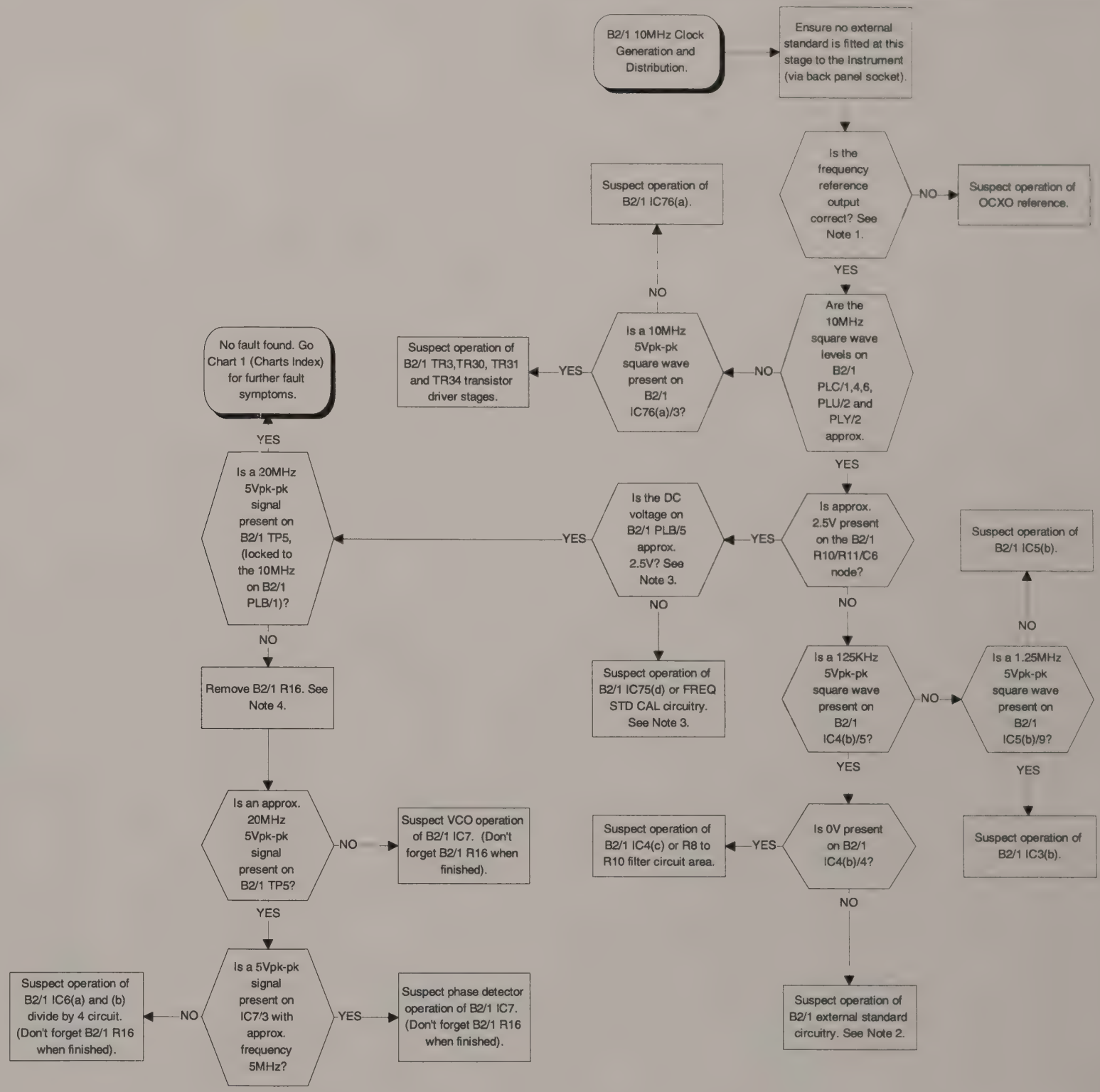

Chart 46
B2/1 10MHz Clock Generation and Distribution

Chart 50
C1/C2 Initial Signal Generator Synthesiser Checks

Associated Circuit Diagrams:
Z44830/110 (B2/1 Microprocessor Board).
Z44830/113 (C1 RF Generator Control Board).
Z44830/104 (C2 RF Oscillator Board).
Z44830/105 (C3 RF Divider Board).

NOTE 1.
The RF output signal from C2 can be derived from one of three VCO's. The first spans 576MHz to 720MHz and is located on C2. The second and third span 720MHz to 912MHz and 912 to 1152MHz and are located on the AF3 daughterboard above C2. These outputs may then be divided/mixed in frequency to obtain the lower signal generator ranges. However, the C1/C2 charts (50 to 53) are only concerned with the operation of the VCO's and so will only test the signal generator over the range 576MHz to 1050MHz and over the divided frequency ranges using the top 1050 to 1152MHz portion of the 912 to 1152MHz VCO.

If correct operation is observed over these ranges, yet the signal generator is still faulty, it will be assumed that the fault lies in the C3 division and filtering, or onwards. In this case, or if C1/C2 are still suspected at signal generator frequencies below 576MHz, see Chart 14 (Signal Generator Route Checks).

NOTE 2.
The 'OSC FREQ' signal should be at the RF GEN FREQ set in the prior operation.

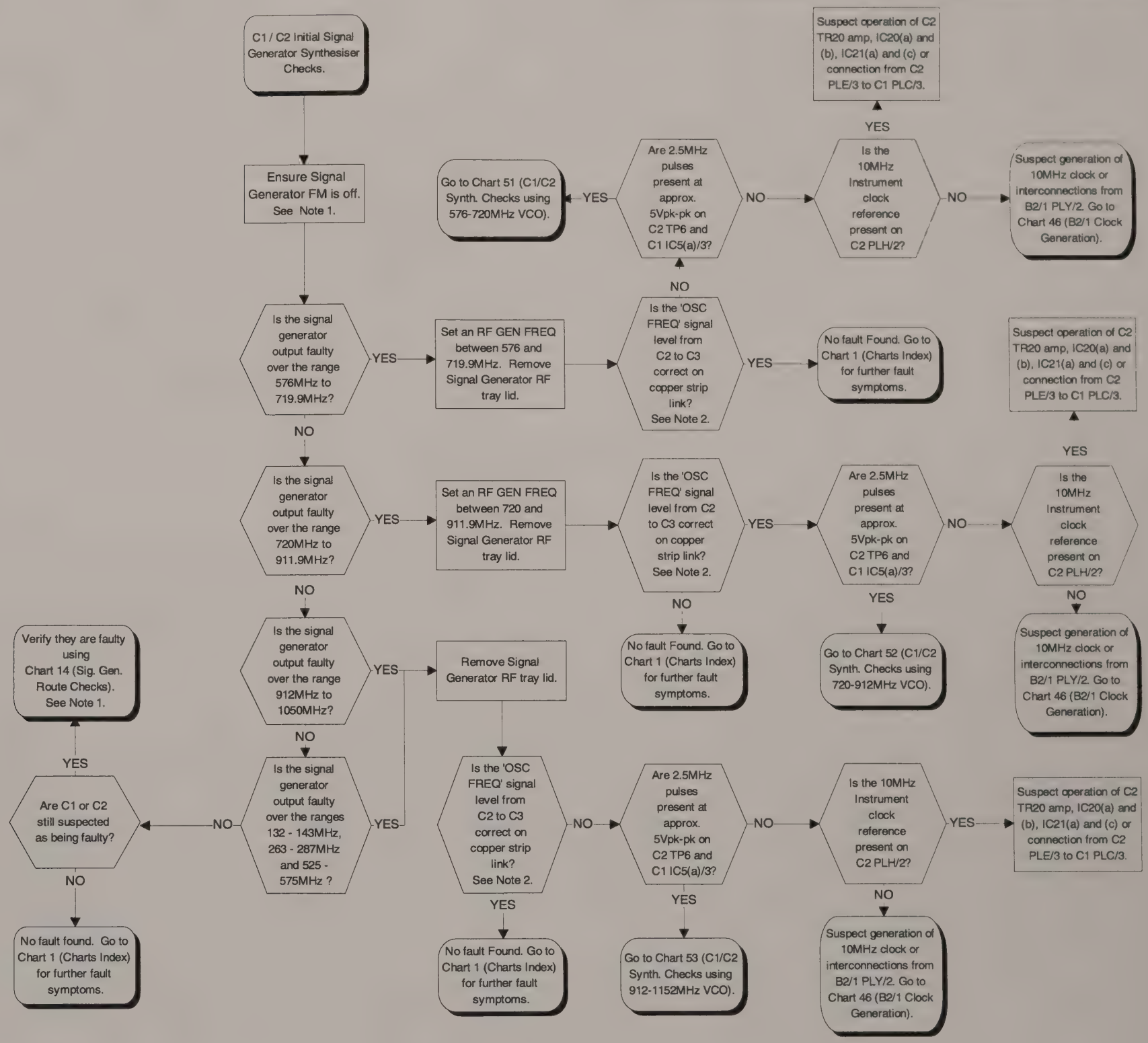

Chart 50
C1/C2 Initial Signal Generator Synthesiser Checks

Chart 51
C1/C2 Synthesiser Checks (using 576 - 720 MHz VCO)

Associated Circuit Diagrams:
Z44830/110 (B2/1 Microprocessor Board).
Z44830/113 (C1 RF Generator Control Board).
Z44830/104 (C2 RF Oscillator Board).
Z44830/105 (C3 RF Divider Board).

NOTE 1.
The flowchart will now test the operation of the C1 / C2 phase locked loop when the output frequency is that for an RF GEN frequency of 648MHz. If setting the RF GEN frequency to 648MHz restores correct operation, select the faulty RF GEN frequency and follow the flowchart but with the VCO tuned to the faulty frequency (576MHz to 720MHz) instead of 648MHz and recalculate the expected output frequency from C1 IC2/7 as (RF GEN FREQ/2) when asked to check for 324MHz.

NOTE 2.
Connect an external DC supply voltage, P, to C2 PLJ/2. Apply an initial voltage of 6.5V. Adjust voltage P between 4V and 8V, such that the RF output on C2 IC7/1 is at an approximate frequency of 648MHz.

NOTE 3.
The 'OSC FREQ' connection from C2 to C1 is made on a copper RF link. The signal level should be approximately +8dBm.

NOTE 4.
A portion of the C2 VCO output is fed to C1 for the phase locked loop divider circuitry. The signal leaves C2 on the copper RF link, marked 'OSC FREQ to C1' at a level of approx. 0dBm.

NOTE 5.
C1 IC10 is a programmable frequency divider driven by the fractional-N control chip, C1 IC9. Check that IC9 is being written to and is supplying IC10 data on pins IC9/2, 3, 4, 5, 6, 7, 8, 64, 65, 66, 67.

NOTE 6.
C2 IC3(b), IC4(a), IC5(a) to (d) are configured as a digital phase detector. Operation of the phase detector can be tested by varying the external voltage, P, on C2 PLJ/2, such that the output frequency, previously observed on the 'C2 OSC FREQ to C3' copper strip between C2 and C3, varies about 648MHz (for 648MHz RF GEN FREQ), whilst verifying the voltages on C2 TP4 and TP5 are as follows:

.	VCO O/P < 648MHz	VCO O/P > 648MHz
TP4	0V (with +5V pulses)	5V (with 0V pulses)
TP5	5V (with 0V pulses)	0V (with +5V pulses)

NOTE 7.
The C2 VCO Drive circuit, consisting of TR3 to TR10, TR15 and TR16, converts the pulsed phase detector output to a steady voltage to drive the VCO. Essentially, C17 and C18 are charged in a ratio that depends on the polarity of the phase detector outputs. This resultant voltage on the charged capacitors drives the TR9 and TR10 output stage. TR15 and TR16 conduct when the magnitude of the phase 'error' signal from the phase detector is large and thus reduce time to lock when the frequency error is large. Operation of the circuit can be tested by varying the external voltage, P, on C2 PLJ/2, such that the output frequency, previously observed on the 'C2 OSC FREQ to C3' copper strip between C2 and C3, varies about 648MHz (for 648MHz RF GEN FREQ), whilst verifying the voltage on C2 PLJ/1is as follows:

.	VCO O/P < 648MHz	VCO O/P > 648MHz
PLJ/1	20V	0.5V

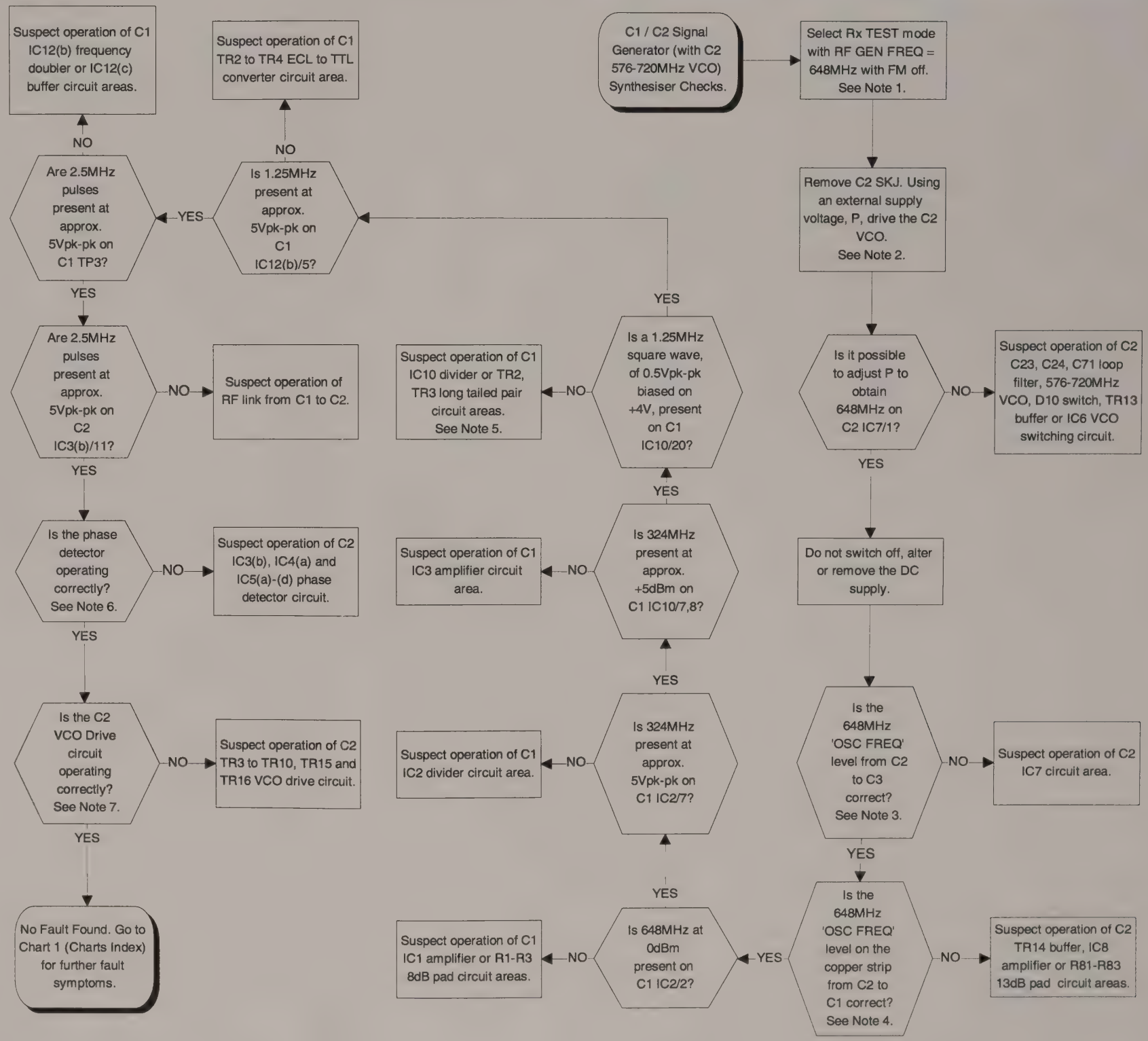

Chart 51
C1/C2 Synthesiser Checks (using 576 - 720 MHz VCO)

Chart 52
C1/C2 Synthesiser Checks (using 720 - 912 MHz VCO)

Associated Circuit Diagrams:
Z44830/110 (B2/1 Microprocessor Board).
Z44830/113 (C1 RF Generator Control Board).
Z44830/104 (C2 RF Oscillator Board).
Z44830/105 (C3 RF Divider Board).

NOTE 1.
The flowchart will now test the operation of the C1 / C2 phase locked loop when the output frequency is that for an RF GEN frequency of 816MHz. If setting the RF GEN frequency to 816MHz restores correct operation, select the faulty RF GEN frequency and follow the flowchart but with the VCO tuned to the faulty frequency (720MHz to 912MHz) instead of 816MHz and recalculate the expected output frequency from C1 IC2/7 as (RF GEN FREQ/2) when asked to check for 408MHz.

NOTE 2.
Connect an external DC supply voltage, P, to C2 PLJ/2. Apply an initial voltage of 11V. Adjust voltage P between 8V and 14V, such that the RF output on C2 IC7/1 is at an approximate frequency of 816MHz.

NOTE 3.
The 'OSC FREQ' connection from C2 to C1 is made on a copper RF link. The signal level should be approximately +8dBm.

NOTE 4.
A portion of the C2 VCO output is fed to C1 for the phase locked loop divider circuitry. The signal leaves C2 on the copper RF link, marked 'OSC FREQ to C1' at a level of approx. 0dBm.

NOTE 5.
C1 IC10 is a programmable frequency divider driven by the fractional-N control chip, C1 IC9. Check that IC9 is being written to and is supplying IC10 data on pins IC9/2, 3, 4, 5, 6, 7, 8, 64, 65, 66, 67.

NOTE 6.
C2 IC3(b), IC4(a), IC5(a) to (d) are configured as a digital phase detector. Operation of the phase detector can be tested by varying the external voltage, P, on C2 PLJ/2, such that the output frequency, previously observed on the 'C2 OSC FREQ to C3' copper strip between C2 and C3, varies about 816MHz (for 816MHz RF GEN FREQ), whilst verifying the voltages on C2 TP4 and TP5 are as follows:

.	VCO O/P < 816MHz	VCO O/P > 816MHz
TP4	0V (with +5V pulses)	5V (with 0V pulses)
TP5	5V (with 0V pulses)	0V (with +5V pulses)

NOTE 7.
The C2 VCO Drive circuit, consisting of TR3 to TR10, TR15 and TR16, converts the pulsed phase detector output to a steady voltage to drive the VCO. Essentially, C17 and C18 are charged in a ratio that depends on the polarity of the phase detector outputs. This resultant voltage on the charged capacitors drives the TR9 and TR10 output stage. TR15 and TR16 conduct when the magnitude of the phase 'error' signal from the phase detector is large and thus reduce time to lock when the frequency error is large. Operation of the circuit can be tested by varying the external voltage, P, on C2 PLJ/2, such that the output frequency, previously observed on the 'C2 OSC FREQ to C3' copper strip between C2 and C3, varies about 816MHz (for 816MHz RF GEN FREQ), whilst verifying the voltage on C2 PLJ/1is as follows:

.	VCO O/P < 816MHz	VCO O/P > 816MHz
PLJ/1	20V	0.5V

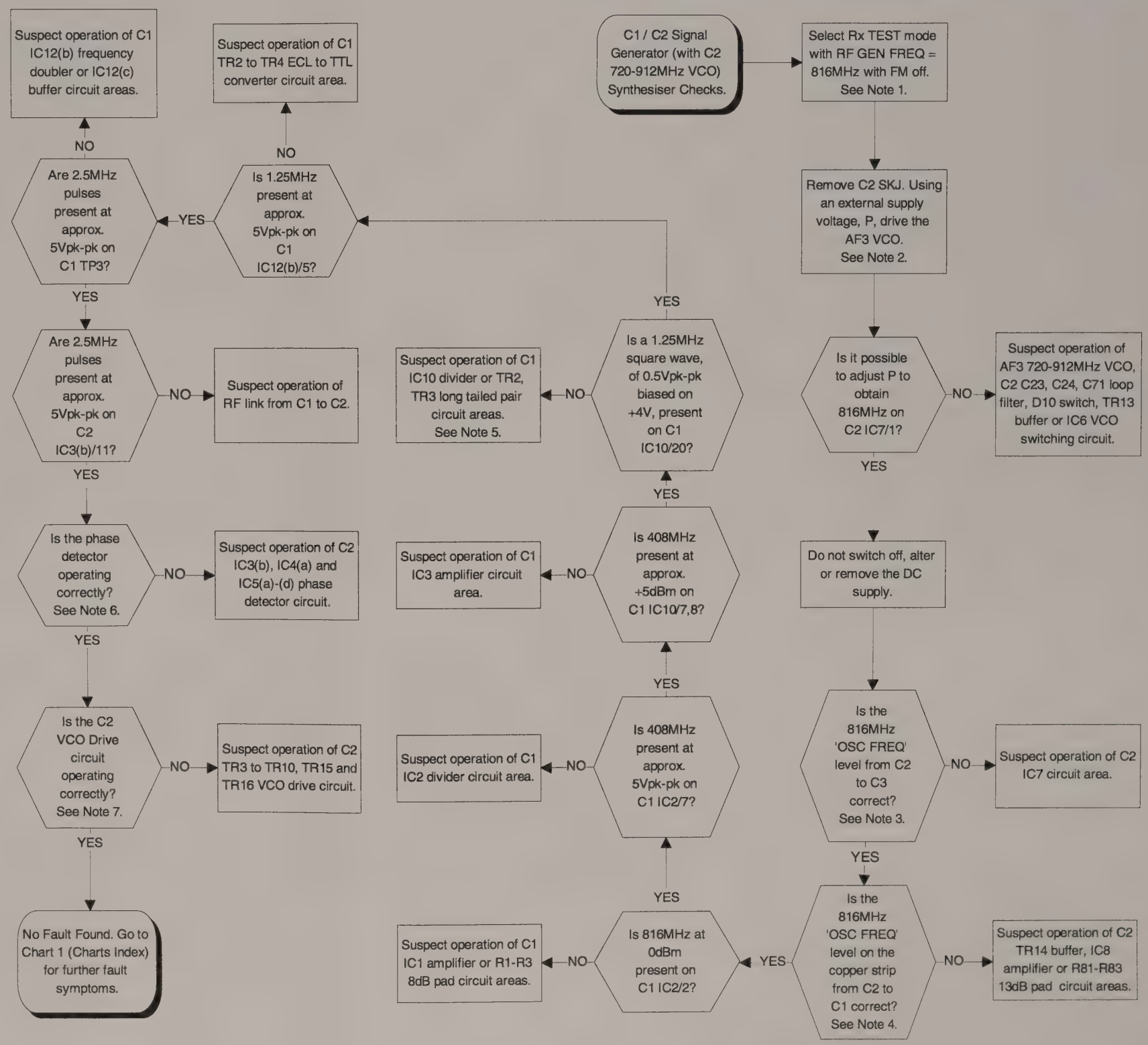

Chart 52
C1/C2 Synthesiser Checks (using 720 - 912 MHz VCO)

Chart 53
C1/C2 Synthesiser Checks (using 912 - 1152 MHz VCO)

Associated Circuit Diagrams:
Z44830/110 (B2/1 Microprocessor Board).
Z44830/113 (C1 RF Generator Control Board).
Z44830/104 (C2 RF Oscillator Board).
Z44830/105 (C3 RF Divider Board).

NOTE 1.
The flowchart will now test the operation of the C1 / C2 phase locked loop when the output frequency is that for an RF GEN frequency of 1032MHz. If setting the RF GEN frequency to 1032MHz restores correct operation, select the faulty RF GEN frequency and follow the flowchart but with the VCO tuned to the faulty frequency (912MHz to 1032MHz) instead of 1032MHz and recalculate the expected output frequency from C1 IC2/7 as (RF GEN FREQ/2) when asked to check for 516MHz.

NOTE 2.
Connect an external DC supply voltage, P, to C2 PLJ/2. Apply an initial voltage of 11V. Adjust voltage P between 8V and 14V, such that the RF output on C2 IC7/1 is at an approximate frequency of 1032MHz.

NOTE 3.
The 'OSC FREQ' connection from C2 to C1 is made on a copper RF link. The signal level should be approximately +8dBm.

NOTE 4.
A portion of the C2 VCO output is fed to C1 for the phase locked loop divider circuitry. The signal leaves C2 on the copper RF link, marked 'OSC FREQ to C1' at a level of approx. 0dBm.

NOTE 5.
C1 IC10 is a programmable frequency divider driven by the fractional-N control chip, C1 IC9. Check that IC9 is being written to and is supplying IC10 data on pins IC9/2, 3, 4, 5, 6, 7, 8, 64, 65, 66, 67.

NOTE 6.
C2 IC3(b), IC4(a), IC5(a) to (d) are configured as a digital phase detector. Operation of the phase detector can be tested by varying the external voltage, P, on C2 PLJ/2, such that the output frequency, previously observed on the 'C2 OSC FREQ to C3' copper strip between C2 and C3, varies about 1032MHz (for 1032MHz RF GEN FREQ), whilst verifying the voltages on C2 TP4 and TP5 are as follows:

.	VCO O/P < 1032MHz	VCO O/P > 1032MHz
TP4	0V (with +5V pulses)	5V (with 0V pulses)
TP5	5V (with 0V pulses)	0V (with +5V pulses)

NOTE 7.
The C2 VCO Drive circuit, consisting of TR3 to TR10, TR15 and TR16, converts the pulsed phase detector output to a steady voltage to drive the VCO. Essentially, C17 and C18 are charged in a ratio that depends on the polarity of the phase detector outputs. This resultant voltage on the charged capacitors drives the TR9 and TR10 output stage. TR15 and TR16 conduct when the magnitude of the phase 'error' signal from the phase detector is large and thus reduce time to lock when the frequency error is large. Operation of the circuit can be tested by varying the external voltage, P, on C2 PLJ/2, such that the output frequency, previously observed on the 'C2 OSC FREQ to C3' copper strip between C2 and C3, varies about 1032MHz (for 1032MHz RF GEN FREQ), whilst verifying the voltage on C2 PLJ/1is as follows:

.	VCO O/P < 1032MHz	VCO O/P > 1032MHz
PLJ/1	20V	0.5V

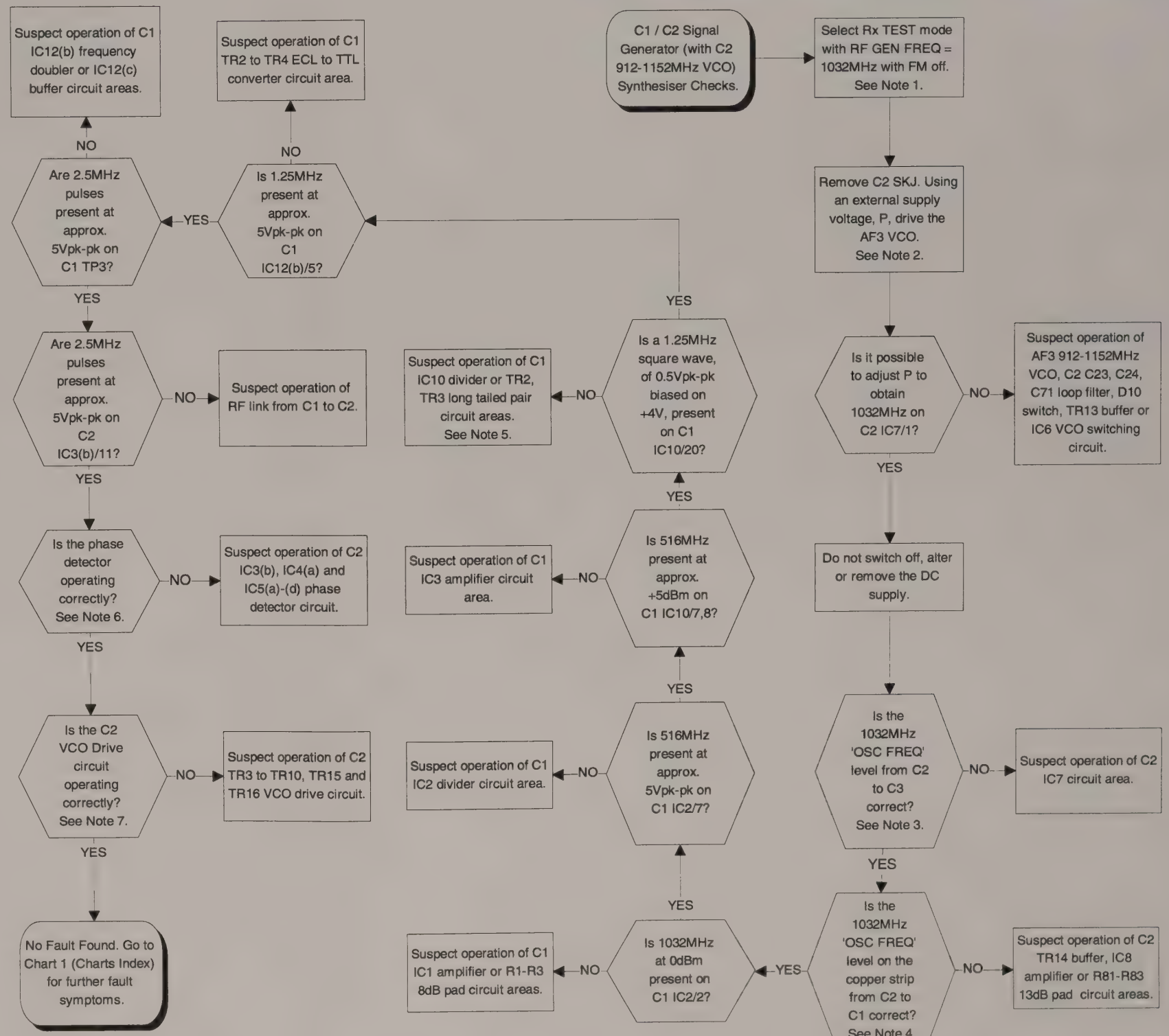

Chart 53
C1/C2 Synthesiser Checks (using 912 - 1152 MHz VCO)

Chart 54
C3 RF Divider Board Checks

Associated Circuit Diagrams:
Z44830/110 (B2/1 Microprocessor Board).
Z44830/113 (C1 RF Generator Control Board).
Z44830/104 (C2 RF Oscillator Board).
Z44830/105 (C3 RF Divider Board).

NOTE 1.
Chart 60 summarises all possible routings through the C3 board (as well as C1/C2, C4 and C5). It is worthwile checking the chart prior to detailed faultfinding, as significant deductions can be made. For example, it can be seen from the chart that if only the RF GEN frequencies from 144MHz to 199.999999MHz are faulty, it is likely the C3 200MHz LPF is at fault.

Chart 54
C3 RF Divider Board Checks

Chart 55
C4 Bypass Board Checks

Associated Circuit Diagrams:
Z44830/113 (C1 RF Generator Control Board).
Z44830/104 (C2 RF Oscillator Board).
Z44830/105 (C3 RF Divider Board).
Z44830/106 (C4 Bypass Board).
Z44830/107 (C5 BFO Board).

NOTE 1.
Chart 60 summarises all possible routings through the C4 board (as well as C1/C2, C3 and C5). It is worthwile checking the chart prior to detailed faultfinding, as significant deductions can be made that may eliminate suspicion of C4. For example, it can be seen from the chart that if only the RF GEN frequencies from 144MHz to 199.999999MHz are faulty, it is likely the C3 200MHz LPF is at fault.

NOTE 2.
Remove Signal Generator RF tray lid. Select Rx TEST mode with RF GEN FREQ = 500MHz.

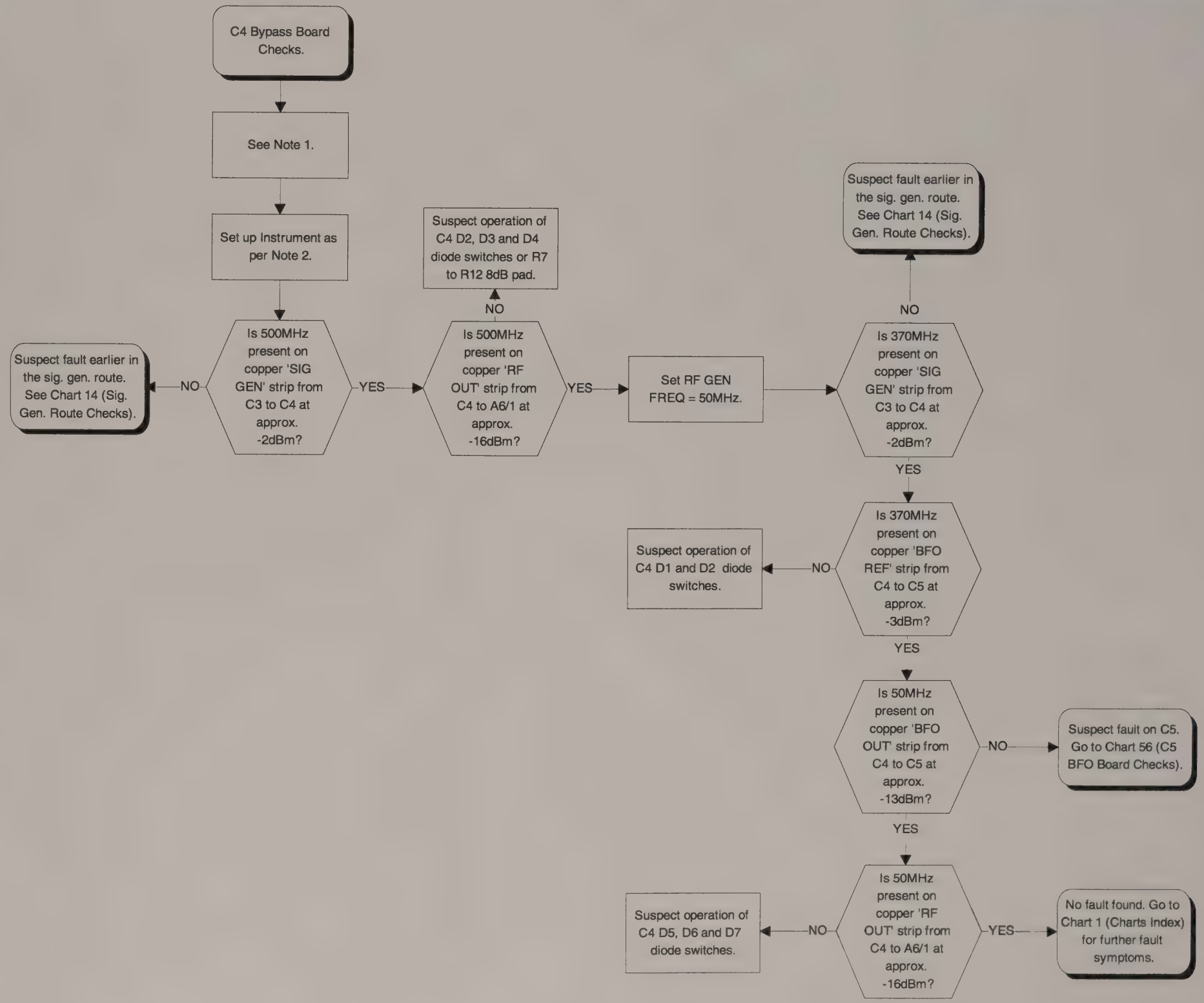

Chart 55
C4 Bypass Board Checks

Chart 56
C5 BFO Board Checks

Associated Circuit Diagrams:
Z44830/113 (C1 RF Generator Control Board).
Z44830/104 (C2 RF Oscillator Board).
Z44830/105 (C3 RF Divider Board).
Z44830/106 (C4 Bypass Board).
Z44830/107 (C5 BFO Board).

NOTE 1.
Chart 60 summarises all possible routings through the C5 board (as well as C1/C2, C3 and C4). It is worthwile checking the chart prior to detailed faultfinding, as significant deductions can be made that may eliminate suspicion of C5. For example, it can be seen from the chart that if only the RF GEN frequencies from 0.4MHz to 39.999999MHz are faulty, it is likely the C2 576MHz to 720MHz VCO is at fault.

NOTE 2.
Remove Signal Generator RF tray lid. Select Rx TEST mode with RF GEN FREQ = 50MHz.

NOTE 3.
The 1280MHz LO is the 2nd LO for the receiver. Therefore, if the spectrum analyser is working correctly, it is likely that the 2nd LO is operational, but is simply not being routed correctly to C5.

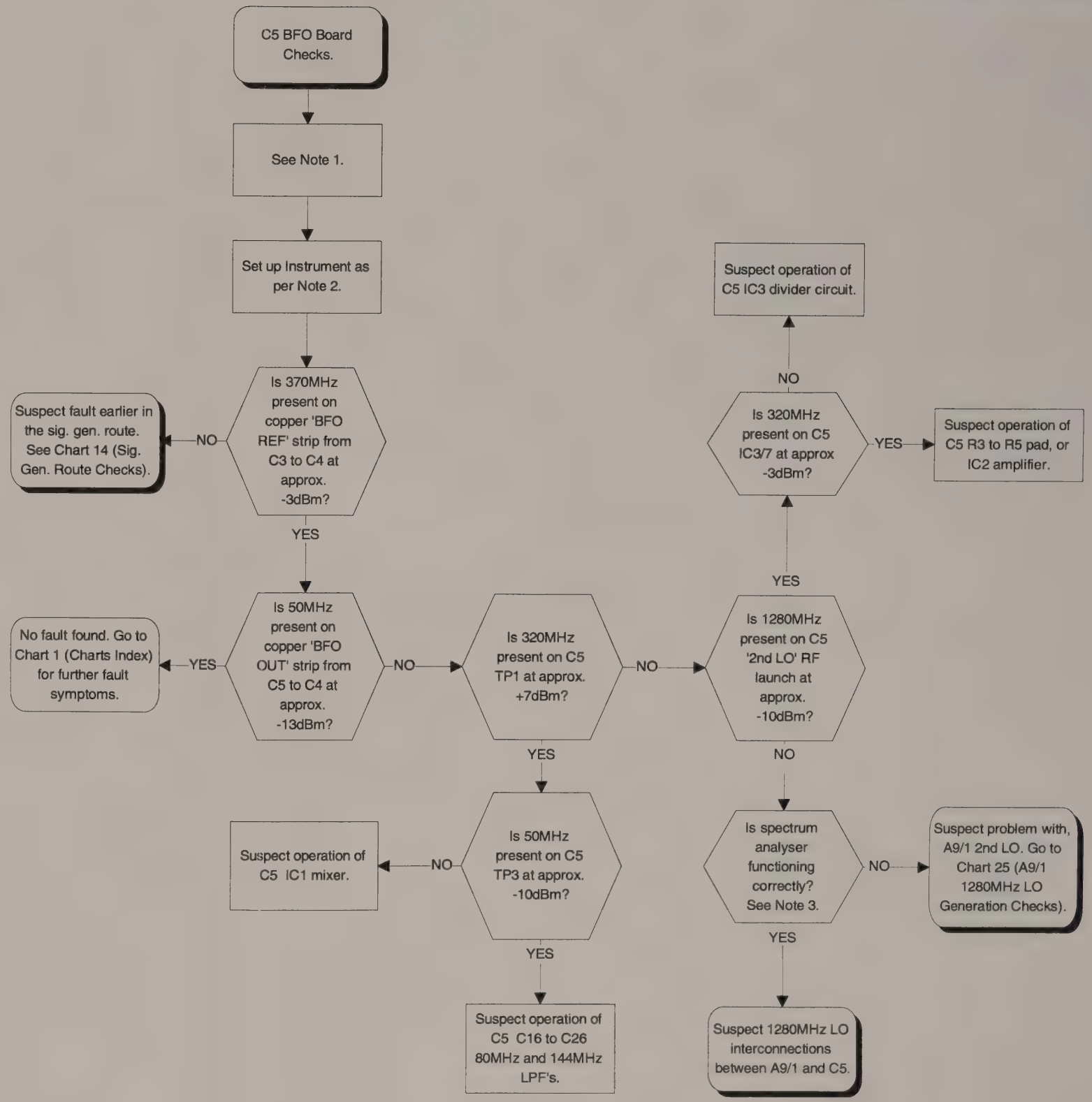

Chart 56
C5 BFO Board Checks

Chart 60
Signal Generator Frequency Derivation Plan

2947 / 2948 Signal Generator Frequency Derivation Plan

Signal Generator Output Frequency / MHz	C2 576 to 720MHZ VCO	AF3 720 to 912MHz VCO	AF3 912 to 1152MHz VCO	C3 Unity Gain Path	C3 Divide-by-two Path	C3 Divide-by-four Path	C3 Divide-by-eight Path	C3 100MHz LPF	C3 140MHz LPF	C3 200MHz LPF	C3 280MHz LPF	C3 400MHz LPF	C3 575MHz LPF	C3 800MHz LPF	C3 1200MHz LPF	C4 BFO Bypass Path	C4 BFO Send Path	C5 BFO
0.4 to 39.999999	✓				✓							✓					✓	✓
40 to 71.999999		✓			✓							✓					✓	✓
72 to 89.999999	✓						✓	✓	✓		✓		✓			✓		
90 to 99.999999		✓					✓	✓	✓		✓		✓			✓		
100 to 113.999999		✓					✓		✓		✓		✓			✓		
114 to 143.999999			✓				✓		✓		✓		✓			✓		
144 to 179.999999	✓					✓				✓	✓		✓			✓		
180 to 199.999999		✓				✓				✓	✓		✓			✓		
200 to 227.999999		✓				✓					✓		✓			✓		
228 to 287.999999			✓			✓					✓		✓			✓		
288 to 359.999999	✓				✓							✓	✓			✓		
360 to 399.999999		✓			✓							✓	✓			✓		
400 to 455.999999		✓			✓								✓			✓		
456 to 575.999999			✓		✓								✓			✓		
576 to 719.999999	✓			✓										✓		✓		
720 to 799.999999		✓		✓										✓		✓		
800 to 911.999999		✓		✓											✓	✓		
912 to 1050.00000			✓	✓											✓	✓		

NOTE 1.
The signal generator output can be derived from one of three VCO's. One VCO (576-720MHz) is located on C2 and the other two are located on AF3, a daughterboard to C2 (720 to 912MHz and 912-1152MHz). The relevant VCO output frequency may then remain the same or be divided by two, four or eight on C3 to obtain signal generator frequencies below 576MHz, before being filtered. Filtering also occurs on C3 and is performed by a combination of eight low pass filters. Finally, for output frequencies below 72MHz a further BFO mixing process takes place. C4 routes the filtered signal to C5 to be mixed with a quarter of the 1280MHz LO (320MHz), after which it passes to the A6/1 Output Amplifier. Otherwise, for output frequencies above 72MHz, C4 routes the filtered signal directly to A6/1. The above table summarises how the various frequency bands are derived in this way.

For example, to obtain output frequencies between 100MHz and 113.999999MHz the output from the 720-912MHz VCO is divided by eight and subsequently filtered by the 140, 280 and 575MHz low pass filters. The output signal is then routed directly to the A6/1 Output Amplifier via the C4 BFO bypass path.

Chart 60
Signal Generator Frequency Derivation Plan

Chart 61
Signal Generator RF Oscillator Output Frequency Table

Relationship Between Requested RF GEN FREQ and Output Frequency from C2 To C3.

Signal Generator Output Frequency / MHz	Frequency Of C3 'OSC FREQ' o/p to C3 / MHz
0.4 to 39.999999	(F+320) x 2
40 to 71.999999	(F+320) x 2
72 to 89.999999	F x 8
90 to 99.999999	F x 8
100 to 113.999999	F x 8
114 to 143.999999	F x 8
144 to 179.999999	F x 4
180 to 199.999999	F x 4
200 to 227.999999	F x 4
228 to 287.999999	F x 4
288 to 359.999999	F x 2
360 to 399.999999	F x 2
400 to 455.999999	F x 2
456 to 575.999999	F x 2
576 to 719.999999	F
720 to 799.999999	F
800 to 911.999999	F
912 to 1050.00000	F

(Where F = Requested RF GEN FREQ)

Chart 61
Signal Generator RF Oscillator Output Frequency Table

Chart 70
B3/1 Analogue Cellular Option Checks

Associated Circuit Diagrams:
44991/229 (2948 Interconnections Diagram).
44830/181 (B3/1 Analogue Cellular Controller Board).

NOTE 1.
A microprocessor fault would prevent the analogue cellular option from beginning to run. Symptoms of this may be an inability to enter SYSTEM or Cell mode, crashing of the instrument having entered SYSTEM or Cell mode, the inability of the instrument to power up when B3/1 is fitted, or that the number after 'Analogue Systems Card' in the HELP / SETUP screen is not fff.

NOTE 2.
Press the MEM key and enter '0', '1'. Press SYSTEM key. Press 'Cell' softkey. Select 'NMT 450/900' (this may require a password). Press MANUAL softkey.

NOTE 3.
It has been established that B3/1 is generating modulation. This modulation is then used to modulate the Instrument signal generator. Assuming the modulation is correct and suitable for the radio under test (if not, check SYSTEM settings) and that the radio under test responds correctly, the reply is downconverted by the Instrument receiver, demodulated and returned to B3/1. Clearly, incorrect operation could imply a fault at any stage in this process. In order to condemn B3/1 it is therefore necessary to eliminate incorrect operation of the Instrument signal generator and receiver using the relevant chart(s) found in Chart 1 (Charts Index). Alternatively, use Chart 53 (B3/1 Receive Checks) to eliminate the possibility of a B3/1 receive fault.

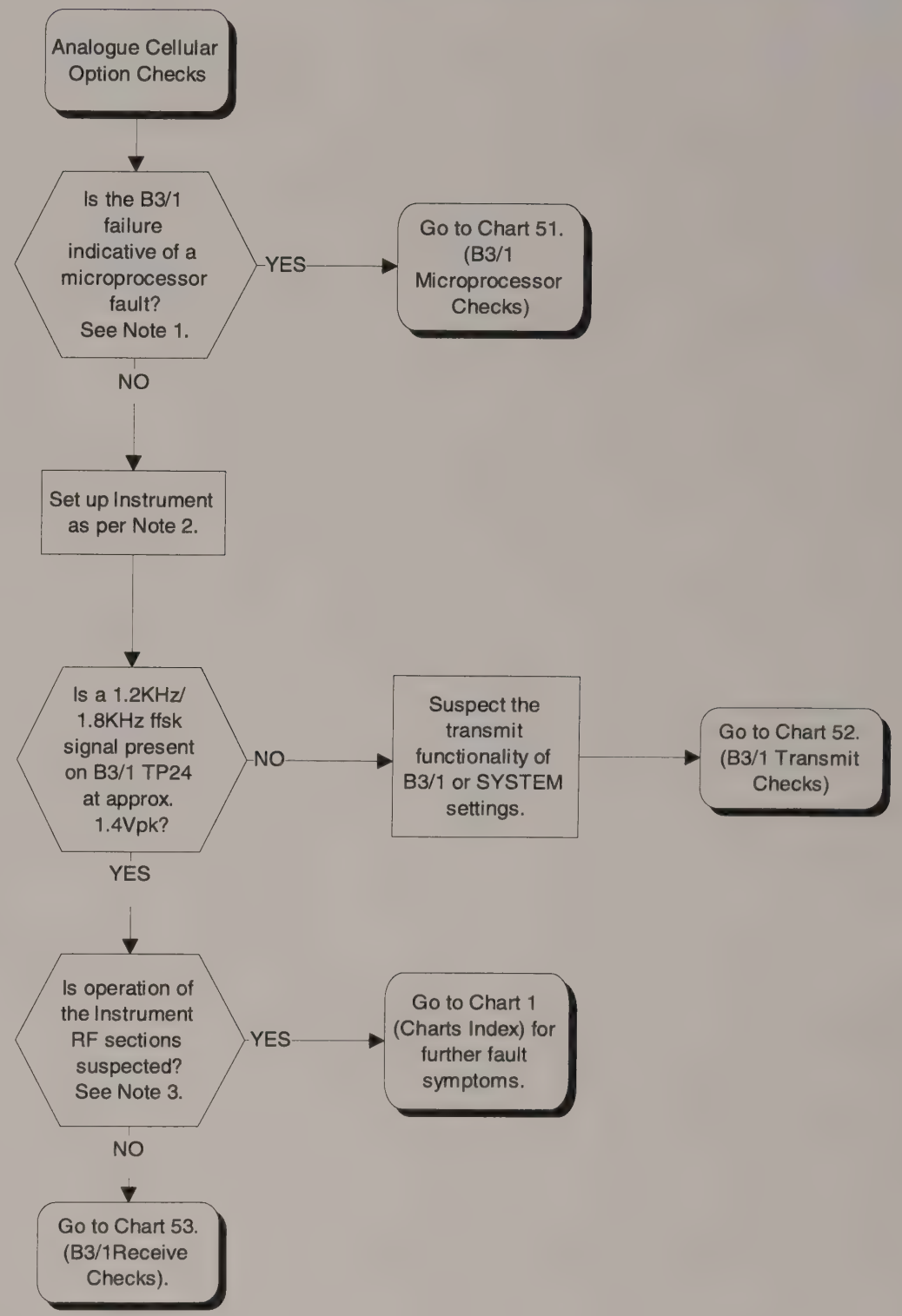

Chart 70
B3/1 Analogue Cellular Option Checks

Chart 71
B3/1 Microprocessor Checks

Associated Circuit Diagrams:
44991/229 (2948 Interconnections Diagram).
44830/181 (B3/1 Analogue Cellular Controller Board).

NOTE 1.
The signal on B3/1 IC12/19 is a fault indicator. Its absence indicates a fundamental microprocessor fault. Initially, check the connections on B3/1 IC13, IC16, IC17, IC9, IC10, IC11(a, b and d), IC7(b) and IC15.
Subsequently, check that the voltage on B3/1 IC13/19 and IC13/20 is 0V at power-up and becomes +5V shortly after power-up. Ensure the 10MHz reference is present on B3/1 IC13/15.

NOTE 2.
The number displayed after 'Analog Systems Card' is a hexidecimal number. Converted to binary, it represents a number whose bits are defined as follows:

Bit 0 - Code running
If low, re-perform this flowchart checking more thoroughly.

Bit 1 - IC22 clock tick
If low,
If gate array is ISS 4, connect B3/1 TP27 to GND and monitor TP33 for a square wave. If the square wave is not present, the device is not programmed, therefore change device. Check connections on B3/1 IC22/9, 10, 11, 12, 13, 16,17, 18, 19, 20, 22, 23, 24, 26, 27 and 52. If good, change device.

Bit 2 - DSP's present
If low, check connections on pins 18, 20, 40 and 42 on B3/1 IC23, IC24 and IC25

Bit 3 - DSP1 boot code sent
If low, check B3/1 IC23/45

Bit 4 - DSP2 boot code sent
If low, check B3/1 IC24/45

Bit 5 - DSP3 boot code sent
If low, check B3/1 IC25/45

Bit 6 - DSP1 boot code confirmed
If low, check connections on B3/1 IC23/1, 3, 4, 5, 6, 38, 44, 66, 67 and 68.

Bit 7 - DSP2 boot code confirmed
If low, check connections on B3/1 IC24/1, 3, 4, 5, 6, 38, 44, 66, 67 and 68.

Bit 8 - DSP3 boot code confirmed
If low, check connections on B3/1 IC25/1, 3, 4, 5, 6, 38, 44, 66, 67 and 68.

Bit 9 - DSP1 application loaded
If low, check connections on B3/1 IC23/7, 8, 9, 11, 12, 13, 14, 15, 32, 33 and 34

Bit 10 - DSP2 application loaded
If low, check connections on B3/1 IC24/7, 8, 9, 11, 12, 13, 14, 15, 31, 32 and 33

Bit 11 - Memory battery voltage
If low, check the battery voltage on B3/1 PLL/2. This should be 3V.

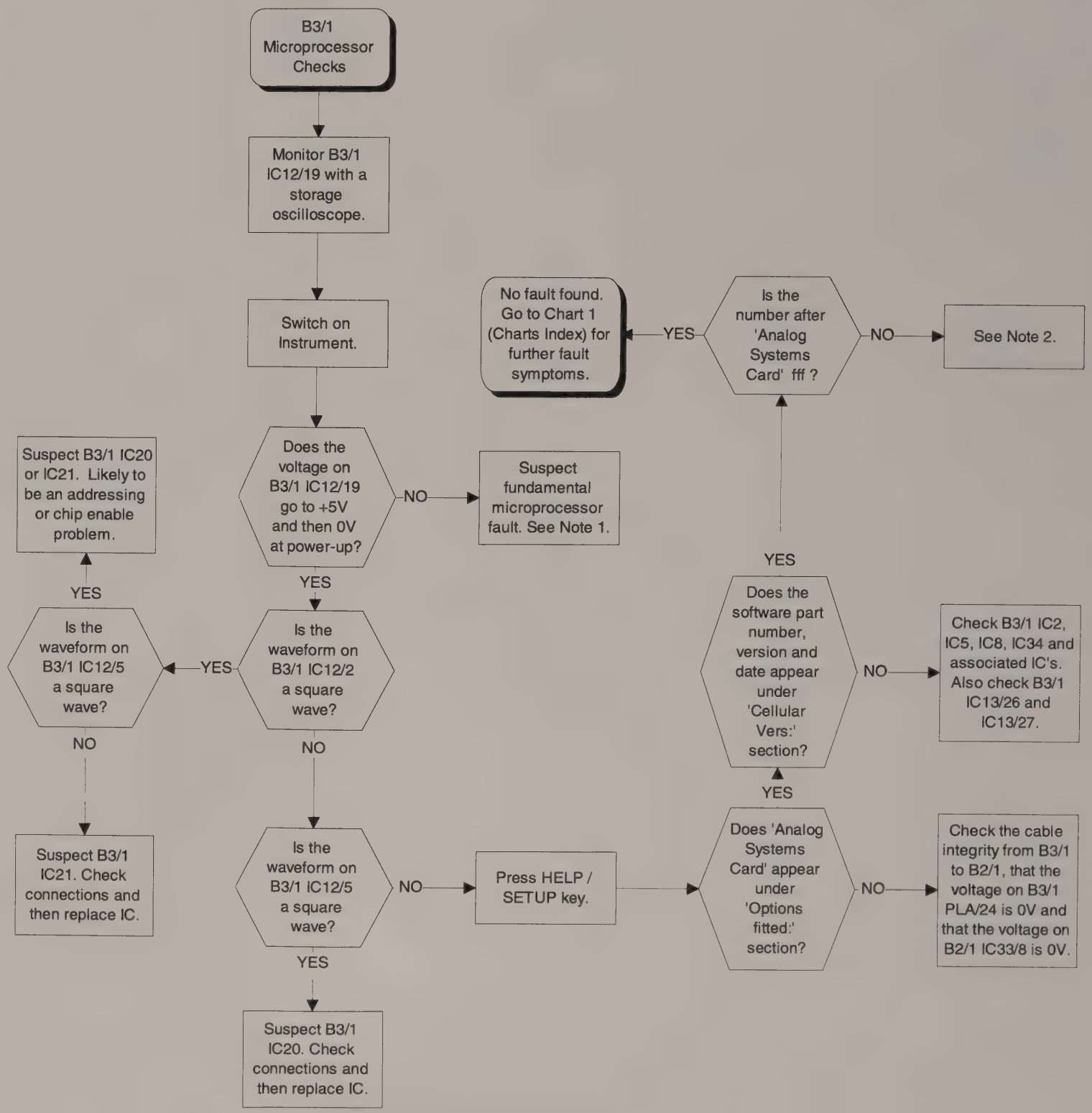

Chart 71
B3/1 Microprocessor Checks

Chart 72
B3/1 Transmit Checks

Associated Circuit Diagrams:
44991/229 (2948 Interconnections Diagram).
44830/181 (B3/1 Analogue Cellular Controller Board).

NOTE 1.
Switch on Instrument. Press the MEM key and enter '0', '1'. Press SYSTEM key. Press 'Cell' softkey. Select 'NMT 450/900' (this may require a password). Press MANUAL softkey.

NOTE 2.
It has been established that B3/1 is generating modulation. This modulation is then used to modulate the Instrument signal generator. Assuming the modulation is correct and suitable for the radio under test (if not, check SYSTEM settings) and that the radio under test responds correctly, the reply is downconverted by the Instrument receiver, demodulated and returned to B3/1. Clearly, incorrect operation could imply a fault at any stage in this process. In order to condemn B3/1, it is therefore necessary to eliminate incorrect operation of the Instrument signal generator and receiver using the relevant chart(s) found in Chart 1 (Charts Index). Alternatively, use Chart 53 (B3/1 Receive Checks) to eliminate the possibility of a B3/1 receive fault.

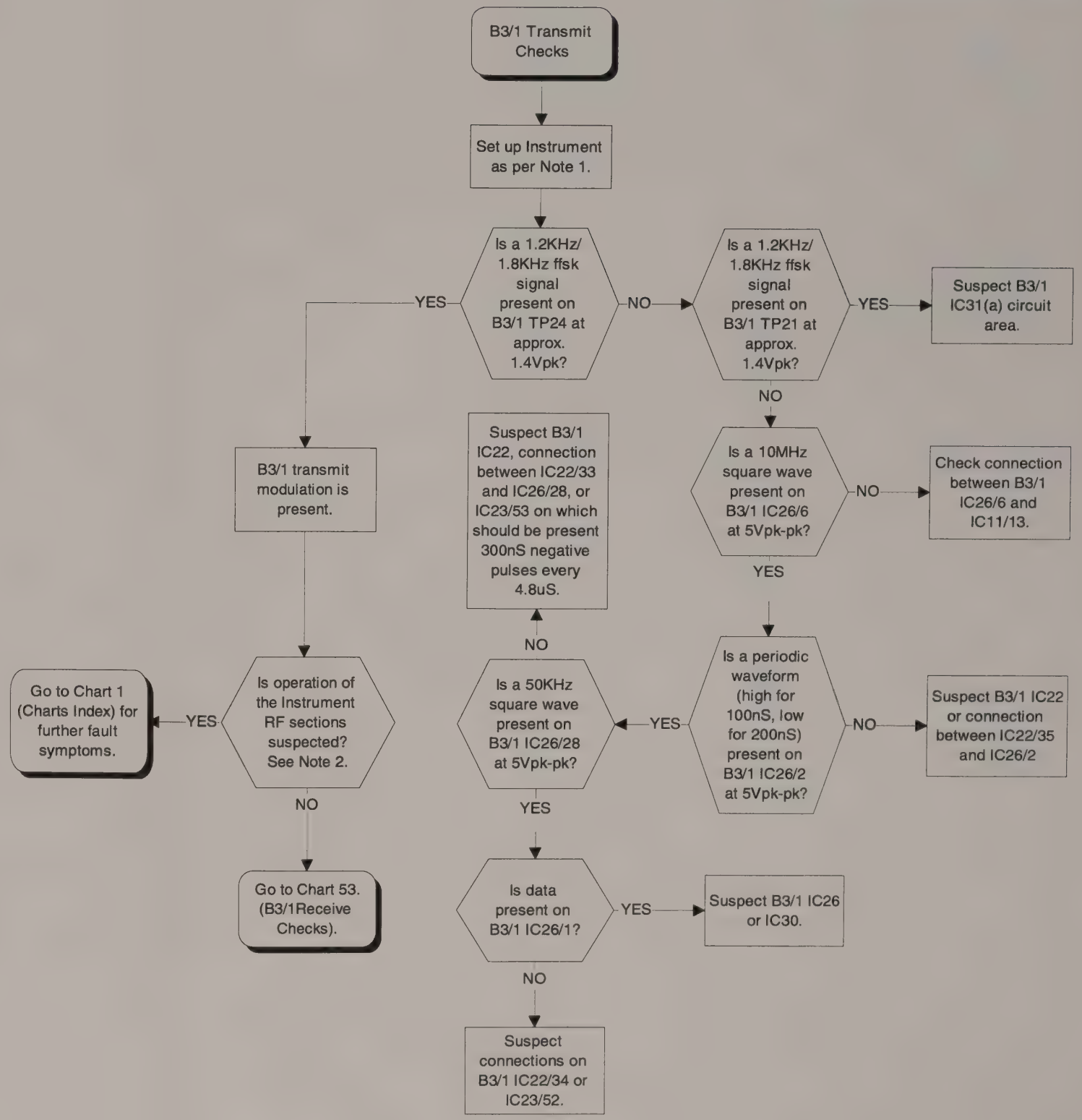

Chart 72
B3/1 Transmit Checks

Chart 73
B3/1 Receive Checks

Associated Circuit Diagrams:
44991/200 (2947 Interconnections Diagram).
44991/229 (Option 40 Interconnections Diagram).
44830/181 (B3/1 Analogue Cellular Controller Board).

NOTE 1.
This chart will test the B3/1 receive section independantly from the rest of the Instrument by disconnecting the B3/1 modulation input and output and connecting them together to form a loopback test. Additionally, an external power supply will be used to drive the log amp detect line to mimic the presence of a detected IF signal from the the receiver:
Remove cable from PLE and connect an external power supply set to 0V to PLE/2.
Remove cables from PLB and PLD. Link PLB/2 to PLD/2.
Switch on Instrument. Press the MEM key and enter '0', '1'. Press SYSTEM key. Press 'Cell' softkey. Select 'NMT 450/900' (this may require a password). Press MANUAL softkey.

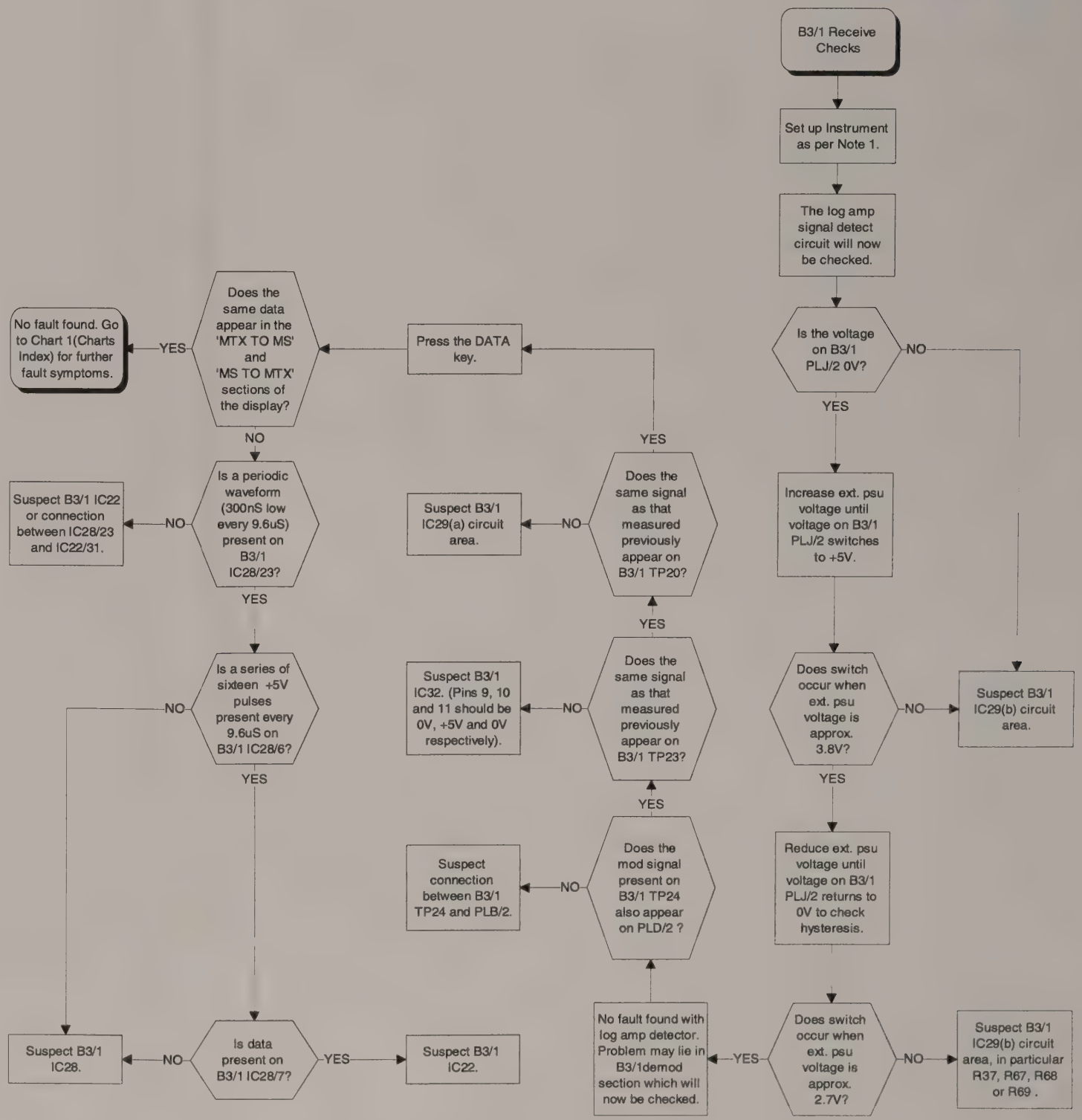

Chart 73
B3/1 Receive Checks

Chapter 6
REPLACEABLE PARTS

Contents

	Unit	Page
Electrical components		**6-4**
Overall assembly	A0	6-4
RF Oscillator	AA1	6-6
Input mixer	A2	6-7
2nd & 3rd mixer	A3	6-10
10.7 MHz IF amplifier and Log. amplifier	A4/1	6-14
RF output amplifier and AM modulator	A6/1	6-23
1st local oscillator control	A7/1	6-26
1st local oscillator	A8/1	6-29
2nd and 3rd local oscillator	A9/1	6-34
2nd and 3rd local oscillator control	A10	6-43
Input/output switching board	A11/1	6-46
Single sideband demodulator (optional)	A15	6-51
RF generator output attenuator	A20	6-54
Input attenuator	A21	6-54
Audio processor	B1/2	6-55
Microprocessor	B2/1	6-78
Cellular radio systems board (optional)	B3/1	6-91
600 Ω audio input/output interface (optional)	B4	6-96
GPIB interface B7		6-97
Parallel interface (optional)	B10	6-98
Light-weight power head interface (optional)	B11	6-99
Memory card and date/time stamp board	B12	6-101
CCITT filter (optional)	B13	6-102
CMESS filter (optional)	B13/1	6-105
Keyboard and front panel		6-108
Display assembly		6-108
Power supply module		6-108
RF generator control	C1	6-109
RF oscillator	C2	6-114
RF divider	C3	6-122
Bypass board	C4	6-128
BFO	C5	6-130
RF tray interconnection PCB (signal generator)	C6	6-132
Interconnections		**6-134**
Miscellaneous mechanical parts		**6-138**

List of tables

Table 6-1 Replaceable interconnecting leads and cables 6-134
Table 6-2 Miscellaneous mechanical parts 6-138

List of figures

Fig. 6-1 Side entry male connector construction 6-3
Fig. 6-2 Miscellaneous Mechanical parts 6-139

Introduction

Each sub-assembly or printed circuit board in this equipment has been allocated a reference designator code, e.g. A0, A1, A2 etc.

The complete component reference includes its reference designator as a prefix e.g. A2C1 (capacitor C1 on sub-assembly A2) but for convenience in the text and diagrams, the prefix is omitted unless it is needed to avoid confusion. However, when ordering replacements or in correspondence, the complete component reference should be quoted.

Component values

One or more of the components fitted in the equipment may differ from those listed in this chapter for any of the following reasons:

(a) Components indicated by an * (or SIC) have their values selected during test to achieve particular performance limits.

(b) Owing to supply difficulties, components of different value or type may be substituted provided the overall performance of the equipment is maintained.

(c) As part of a policy of continuous development, components may be changed in value or type to obtain detail improvements in performance.

When there is a difference between the component fitted and the one listed, always use as a replacement the same type and value as found in the equipment.

The Component List includes information about one source of manufacture for each part along with that manufacturer's part number. Sources other than those listed may have been used to supply parts used in your equipment. Alternative replacement devices can often be obtained from other manufacturers but the user must satisfy himself that the items are equivalent in all significant parameters before fitting to the equipment. Where the manufacturer is listed as Marconi Instruments, the part can only be obtained from our Service Division or your nearest Agent.

Component numbering

As part of a policy of continuous development, circuit changes may take place which results in components being no longer required. This can result in breaks in the numbering sequence of components. Sequence breaks are also present where specific sections of a board use component numbering which start from a specific number. e.g. C101, D101, R101; C201, D201, R201 etc.

Ordering

When ordering replacements, address the order to our Service Division (address at rear of manual) or nearest agent and specify the following for each component required:-

(1) Type and serial number of equipment, as given on the serial number label at the rear of the equipment. If this is superseded by a model number label, quote the model number instead of the type number.

(2) Complete circuit reference.

(3) Description.

(4) Part number.

PCB connections

Many of the connections to the printed circuit boards are made through multi-pin connections, with the male contacts formed by square terminal pins, each 0.64mm thick and 5.97mm high. The part number of these pins is 23435/188. Each 'way' of the connector uses one pin.

Other connections are made using right-angle pins to form a side entry connector. These can have single or double rows of pins. There are two types of pins used. Part number 23435/120 is used for the row of pins adjacent to the circuit board. Part number 23435/112 is designed to form

a second row, over the first. Fig 6-1 *Side entry male connector construction,* shows this. The part number relates to a strip of 36 pins. The required number of pins is cut from the strip as appropriate. Where keyways are required, the pin occupying that position in the row of pins is removed. This should be done using small pointed pliers, before the pins are inserted into the board.

To avoid repetition and possible confusion, references to these connections have been removed from the parts lists of individual boards. The listing for these pins is given below.

23435/112	CONNECTOR MULTIWAY, PCB HEADER-PIN,36 WAY, RIGHT ANGLED, 2.54mm PITCH, PINS GOLD PLATED. 5.11mm LONG	BERG ELECTRONICS 75168-107-36
23435/120	CONNECTOR MULTIWAY, PCB HEADER-PIN,36 WAY, RIGHT ANGLED, 2.54mm PITCH, PINS GOLD PLATED. 2.57mm LONG	BERG ELECTRONICS 75168-101-36
23435/188	TERMINAL CONNECTOR-PIN, 0.64mm SQUARE, 5.97mm HIGH, PCB MOUNTING,SINGLEENDED, PHOSPHOR BRONZE	BERG ELECTRONICS 75401-001

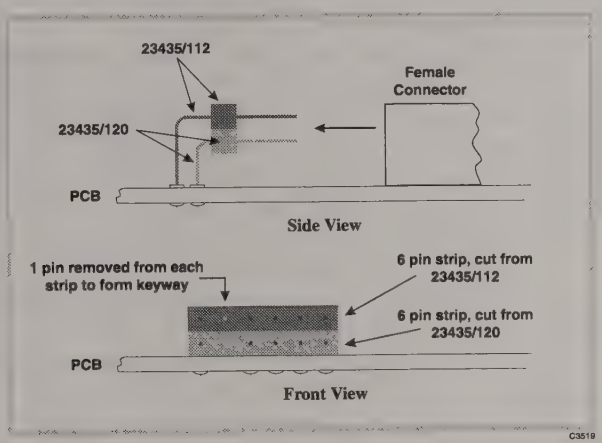

Fig. 6-1 Side entry male connector construction

Electrical components

Cir. Ref.	MI part number	Description	Manufacturer	Manufacturer's part number
Overall assembly A0				
		When ordering, prefix circuit reference with A0.		
	44991/229	Complete unit	Issue 008	
C1 to C27	26397/205	FILTER RFI-SUPPRESSION, 1.5nF MIN, 350V DC, FEED-THROUGH, CERAMIC, PI-CIRCUIT, SOLDER-IN.	BECK ELECTRONICS	TPS003A
C27	26386/975	CAPACITOR-FIXED CERAMIC 6.8pF +/-0.1pF 50V 60 ppm/DEG.C, HIGH-Q, SINGLELAYER, SURFACE-MOUNTED,	AVX LTD	0805-5K-6R8-BAW-TR
C27	26386/897	CAPACITOR-FIXED CERAMIC 4.7pF +/-0.1pF 50V 60 ppm/DEG.C, HIGH-Q, SINGLELAYER, SURFACE-MOUNTED,	AVX LTD	0805-5K4R7-BAW-TR
C28 to C103	26397/205	FILTER RFI-SUPPRESSION, 1.5nF MIN, 350V DC, FEED-THROUGH, CERAMIC, PI-CIRCUIT, SOLDER-IN.	BECK ELECTRONICS	TPS003A
C104	26343/446	CAPACITOR-FIXED CERAMIC 180pF +/-2% 63V N750 SINGLELAYER, RADIAL, 2.5mm PWP, (TAPED).	VISHAY COMPONENTS	ROU-181-GAK-ACR-J
C104 to C145	26397/205	FILTER RFI-SUPPRESSION, 1.5nF MIN, 350V DC, FEED-THROUGH, CERAMIC, PI-CIRCUIT, SOLDER-IN.	BECK ELECTRONICS	TPS003A
C146	26333/228	CAPACITOR-FIXED CERAMIC 10pF +/-10% 300V NP0 FEED-THROUGH, SOLDER-IN MOUNTING, 3.9mm MOUNTING	FERROPERM UK LTD	10p110,24XXX-94511/1
C147	26386/987	CAPACITOR-FIXED CERAMIC 10nF +/-10% 50V X7R MULTILAYER, AXIAL, GLASS COATED BODY, (LOOSE OR	PHILIPS	C41C103K-DRM
C148	26386/987	CAPACITOR-FIXED CERAMIC 10nF +/-10% 50V X7R MULTILAYER, AXIAL, GLASS COATED BODY, (LOOSE OR	PHILIPS	C41C103K-DRM
C149	26582/421	CAPACITOR-FIXED POLYESTER 4.7uF +/-10% 63V RADIAL, 22.5mm PWP, (LOOSE).	VISHAY COMPONENTS	MKT-1822-547/065
C151	26383/587	CAPACITOR-FIXED CERAMIC 2.2nF +/-10% 63V 2C2 SINGLELAYER, RADIAL, 2.5mm PWP, (TAPED).	PHILIPS	2222-630-51222
FB1 to FB6	23635/845	CORE BEAD, 8mm DIA, 10mm LONG, 3mm I/DIA, FERRITE, GRADE 4S2, SINGLE HOLE, CODED YELLOW,	PHILIPS	4330-030-33200
FS1	23411/060	FUSE TIME-LAG 2A RATING, 20mm LONG x 5mm DIA, 250V AC, GLASS CASE, SPIRAL OR SPRING CONSTRUCTION, VDE	LITTELFUSE TRACOR	213002.
FS2	23411/074	FUSE TIME-LAG 10A RATING, 20mm LONG x 5mm DIA, CERAMIC CASE, 1000A BREAKING CAPACITY @ 250V.	SCHURTER SWITZERLAND	SPT-0001-2514
LS1	23646/109	LOUDSPEAKER ROUND, 8R 200mW - 2.25in DIA, 0.85in DEEP.	ALTAI (TAIWAN)	L010
R1 to R3	25761/005	RESISTOR-VARIABLE CONDUCTIVE-PLASTIC LINEAR, 50K 20% 250mW 200V SINGLE-TURN, PANEL-MTG, SQUARE,	MEGGITT ELECTRONICS	12P/E454/8/12101/019
SKA	23443/449	CONNECTOR-RF BNC-TYPE FEMALE, RECEPTACLE, 50 OHMS, BULKHEAD, SOLDER-BUCKET, INSULATED, FRONT MTG,	AMPHENOL LTD	31-10
SKB	23443/449	CONNECTOR-RF BNC-TYPE FEMALE, RECEPTACLE, 50 OHMS, BULKHEAD, SOLDER-BUCKET, INSULATED, FRONT MTG,	AMPHENOL LTD	31-10
SKC to SKE	23443/442	CONNECTOR-RF BNC-TYPE FEMALE, RECEPTACLE, 50 OHMS, BULKHEAD, SOLDER-BUCKET, FRONT MOUNTING, NICKEL	RADIALL-TRANSRADIO	R-141-563

Cir. Ref.	MI part number	Description	Manufacturer	Manufacturer's part number
Overall assembly A0 (contd.)				
SKF to SKK	23444/509	CONNECTOR-RF SMA-TYPE FEMALE, RECEPTACLE, 50 OHMS, FLANGED, SOLDER-BUCKET, FLUSH DIELEC, 12.7mm SQ	ITT CANNON (UK)	050-645-9019-890
SKL	23444/551	CONNECTOR-RF SMA-TYPE MALE, PLUG, 50 OHMS, FLANGED, SOLDER-BUCKET, 12.7mm SQ FLANGE, 4 HOLES	ITT CANNON (UK)	050-646-4504-310
SKM	23444/505	CONNECTOR-RF SMA-TYPE FEMALE, JACK, 50 OHMS, ELBOW, FLANGED, SOLDER-BUCKET, 12.7mm SQUARE	ITT CANNON (UK)	050-647-4504-890
SKN	23444/505	CONNECTOR-RF SMA-TYPE FEMALE, JACK, 50 OHMS, ELBOW, FLANGED, SOLDER-BUCKET, 12.7mm SQUARE	ITT CANNON (UK)	050-647-4504-890
X1	23423/177	CONNECTOR MAINS, PLUG, 3 WAY, RF FILTER, SINGLE FUSE, 4A, 250V, PANEL MOUNTING, SOLDER TAG TERMS,	A.F. BULGIN & CO PLC	PS20/A0620/28
X2	44991/146	FAN AXIAL-FLOW, BRUSHLESS, ASSEMBLY, 12V DC, 230mA 1.9W 3200 RPM, 54 CU.MTR/HR, 34 dBA-MAX NOISE, 80		
X6	44991/179	POWER-SUPPLY SWITCH MODE UNIT, 65W, 180 - 264VAC OR 90 - 132VAC & 11V - 32VDC INPUTS, 5V 12V 24V &		
X8	23467/260	MODULE OPTO SHAFT ENCODER, 64 CYCLES/REV, 5V 26mA 0.25in DIA PLAIN SHAFT, 0.625in LONG, 3/8"-32UNEF	BOURNS ELECTRONICS	ENA1J-B20-L00064
X9	44991/132	POWER LOAD (2945)		
X10	28624/308	DISPLAY LIQUID CRYSTAL, BLUE, FAST, 400 x 200 DOT MATRIX, 162mm x 84mm VIEWING AREA, GRAPHIC MODULE	EPSON (UK) LTD	ECM-A0310-1
X11	46662/603	KEYBOARD ELASTOMERIC, 2947, MARKED, 51 SWITCHES, 5-LED, 1-PCB, FRONT PANL 342mmLG, 151mmWD, SUPPORT		

Cir. Ref.	MI part number	Description	Manufacturer	Manufacturer's part number

RF Oscillator AA1

When ordering, prefix circuit reference with AA1.

	44830-160	Complete unit	Issue 001	
C1 to C3	26386/863	CAPACITOR-FIXED CERAMIC 1nF +/-10% 50V X7R/2C1, MULTILAYER, SURFACE-MOUNTED, SIZE 0805, NICKEL	ROHM ELECTRONICS LTD	MCH21-5C-102-KP
C4	26386/787	CAPACITOR-FIXED CERAMIC 27pF +/-2% 50V 60 ppm/DEG.C, HIGH-Q, SINGLELAYER, SURFACE-MOUNTED,	AVX LTD	0805-5K-270-GAW
C5	26386/975	CAPACITOR-FIXED CERAMIC 6.8pF +/-0.1pF 50V 60 ppm/DEG.C, HIGH-Q, SINGLELAYER, SURFACE-MOUNTED,	AVX LTD	0805-5K-6R8-BAW-TR
C6	26386/824	CAPACITOR-FIXED CERAMIC 100pF +/-5% 50V NP0 MULTILAYER, SURFACE-MOUNTED, SIZE 0805, NICKEL	ROHM ELECTRONICS LTD	MCH21-5A-101-JP
C7	26386/824	CAPACITOR-FIXED CERAMIC 100pF +/-5% 50V NP0 MULTILAYER, SURFACE-MOUNTED, SIZE 0805, NICKEL	ROHM ELECTRONICS LTD	MCH21-5A-101-JP
D1	28381/530	DIODE VARIABLE CAPACITNCE, BB215... 30V 20mA 2.2pF @ 28V, CAPAC RATIO 7.6 MIN, MARKING GREEN, SURFACE	PHILIPS	BB215
D2	28381/530	DIODE VARIABLE CAPACITNCE, BB215... 30V 20mA 2.2pF @ 28V, CAPAC RATIO 7.6 MIN, MARKING GREEN, SURFACE	PHILIPS	BB215
L1 to L3	23642/535	INDUCTOR-FIXED 1uH +/- 5% EPOXY-MOULD, 400mA 0R7 MAX, 30 Q @ 7.96 MHz, 120 MHz SRF, SURFACE	MEGGITT ELECTRONICS	3612-T-1R0-J
R1	24811/175	RESISTOR-FIXED METAL-FILM 1K21 +/- 1% 250mW 200V 50 ppm/DEG.C, SURFACE MOUNTED, SIZE MINI-MELF,	VISHAY COMPONENTS	SMM0204-1K21-1%50ppm
R2	24811/171	RESISTOR-FIXED METAL-FILM 825R +/- 1% 250mW 200V 50 ppm/DEG.C, SURFACE MOUNTED, SIZE MINI-MELF,	VISHAY COMPONENTS	SMM0204-825R-1%50ppm
R3	24811/928	RESISTOR-FIXED METAL-FILM 121R +/- 1% 250mW 200V 50 ppm/DEG.C, LOW-INDUCTANCE, SURFACE MOUNTED,	VISHAY COMPONENTS	SMM0204-HF-121R-1%
R4	24321/412	RESISTOR-FIXED METAL-GLAZE 33R +/- 2% 100mW 100V 200 ppm/DEG.C, Ni-BARRIER & REFLOW HOT-DIP SOLDER,	VTM (UK) LTD	503-0-33R-1%-100ppm
R5	24321/411	RESISTOR-FIXED METAL-GLAZE 30R +/- 2% 100mW 100V 200 ppm/DEG.C, Ni-BARRIER & REFLOW HOT-DIP SOLDER,	VTM (UK) LTD	503-0-30R-1%-100ppm
R6	24321/410	RESISTOR-FIXED METAL-GLAZE 27R +/- 2% 100mW 100V 200 ppm/DEG.C, Ni-BARRIER & REFLOW HOT-DIP SOLDER,	VTM (UK) LTD	503-0-27R-1%-100ppm
R7	24321/411	RESISTOR-FIXED METAL-GLAZE 30R +/- 2% 100mW 100V 200 ppm/DEG.C, Ni-BARRIER & REFLOW HOT-DIP SOLDER,	VTM (UK) LTD	503-0-30R-1%-100ppm
TR1	28457/866	TRANSISTOR NPN BIPOLAR NE85634... 10V 6.5GHz 40mA 50hFE MIN @ 20mA, PWR GAIN 9.5dB @ 1GHz, SURFACE	NEC ELECTRONICS LTD	NE85634-T1

Cir. Ref.	MI part number	Description	Manufacturer	Manufacturer's part number

Input mixer A2

When ordering, prefix circuit reference with A2.

	44829-922	Complete unit	Issue 009	
C1	26386/992	CAPACITOR-FIXED CERAMIC 330nF +/-10% 50V X7R, MULTILAYER, SURFACE-MOUNTED, SIZE 1812, NICKEL	PHILIPS	1812-2B-334-K9BB
C4 to C7	26386/875	CAPACITOR-FIXED CERAMIC 10nF +/-10% 50V X7R/2C1, MULTILAYER, SURFACE-MOUNTED, SIZE 0805, NICKEL	ROHM ELECTRONICS LTD	MCH21-5C-103-KP
C8	26386/760	CAPACITOR-FIXED CERAMIC 220nF +/-10% 50V X7R MULTILAYER, SURFACE-MOUNTED, SIZE 1210, NICKEL	PHILIPS	1210-2R-224-K9-BBC
C9	26386/760	CAPACITOR-FIXED CERAMIC 220nF +/-10% 50V X7R MULTILAYER, SURFACE-MOUNTED, SIZE 1210, NICKEL	PHILIPS	1210-2R-224-K9-BBC
C10	26386/875	CAPACITOR-FIXED CERAMIC 10nF +/-10% 50V X7R/2C1, MULTILAYER, SURFACE-MOUNTED, SIZE 0805, NICKEL	ROHM ELECTRONICS LTD	MCH21-5C-103-KP
C11	26386/992	CAPACITOR-FIXED CERAMIC 330nF +/-10% 50V X7R, MULTILAYER, SURFACE-MOUNTED, SIZE 1812, NICKEL	PHILIPS	1812-2B-334-K9BB
C12	26386/899	CAPACITOR-FIXED CERAMIC 100nF +/-10% 50V X7R/2C1, MULTILAYER, SURFACE-MOUNTED, SIZE 1206, NICKEL	ROHM ELECTRONICS LTD	MCH31-5C-104-KP
C13	26386/970	CAPACITOR-FIXED CERAMIC 1.5pF +/-0.1pF 50V 60 ppm/DEG.C, HIGH-Q, SINGLELAYER, SURFACE-MOUNTED,	AVX LTD	0805-5K-1R5-BAW-TR
C14	26386/897	CAPACITOR-FIXED CERAMIC 4.7pF +/-0.1pF 50V 60 ppm/DEG.C, HIGH-Q, SINGLELAYER, SURFACE-MOUNTED,	AVX LTD	0805-5K4R7-BAW-TR
C15	26386/972	CAPACITOR-FIXED CERAMIC 2.7pF +/-0.1pF 50V 60 ppm/DEG.C, HIGH-Q, SINGLELAYER, SURFACE-MOUNTED,	AVX LTD	0805-5K-2R7-BAW-TR
C16	26386/897	CAPACITOR-FIXED CERAMIC 4.7pF +/-0.1pF 50V 60 ppm/DEG.C, HIGH-Q, SINGLELAYER, SURFACE-MOUNTED,	AVX LTD	0805-5K4R7-BAW-TR
C17	26386/970	CAPACITOR-FIXED CERAMIC 1.5pF +/-0.1pF 50V 60 ppm/DEG.C, HIGH-Q, SINGLELAYER, SURFACE-MOUNTED,	AVX LTD	0805-5K-1R5-BAW-TR
C18	26386/824	CAPACITOR-FIXED CERAMIC 100pF +/-5% 50V NP0 MULTILAYER, SURFACE-MOUNTED, SIZE 0805, NICKEL	ROHM ELECTRONICS LTD	MCH21-5A-101-JP
C19	26451/009	CAPACITOR-FIXED ALUMINIUM 47uF +/-20% 16V ELECTROLYTIC, SURFACE-MOUNTED, SIZE 6.6 x 6.6mm,	PANASONIC INDUSTRIAL	ECE-V-1CA-470P
C22	26386/992	CAPACITOR-FIXED CERAMIC 330nF +/-10% 50V X7R, MULTILAYER, SURFACE-MOUNTED, SIZE 1812, NICKEL	PHILIPS	1812-2B-334-K9BB
D2	28383/932	DIODE PIN, HSMP-3810... 250mW 100V 1A 0.35pF Rs 4R0 MAX @ 100mA, MARKING CODE E0, LOW PROFILE,	HEWLETT-PACKARD	HSMP-3810-L31
D3	28335/670	DIODE BAND SWITCHING, BAT18... 35V 100mA 1pF MAX @ 20V, 1.2Vf @ 100mA, MARKING CODE A2, SURFACE	PHILIPS	BAT18/T1
D4	28383/962	DIODE PIN, BAR60... TRIPLE, 100V 0.25pF 1.05Vf @ 100mA, T-CIRCUIT, MARKING CODE 60, SURFACE	SIEMENS LTD	BAR60
D5	28335/670	DIODE BAND SWITCHING, BAT18... 35V 100mA 1pF MAX @ 20V, 1.2Vf @ 100mA, MARKING CODE A2, SURFACE	PHILIPS	BAT18/T1
D8	28371/302	DIODE ZENER, BZX84-C4V7... 250mW 4.7V 5% 250mA MARKING CODE Z1, SURFACE MOUNTED, SOT-23, (8mm	PHILIPS	BZX84-C4V7
D12	28383/941	DIODE BAND SWITCHING, BA682... 35V 100mA 1.2pF MAX @ 3V, SURFACE MOUNTED, SOD-80, (8mm TAPE -	PHILIPS	BA682
D13	28383/941	DIODE BAND SWITCHING, BA682... 35V 100mA 1.2pF MAX @ 3V, SURFACE MOUNTED, SOD-80, (8mm TAPE -	PHILIPS	BA682

Cir. Ref.	MI part number	Description	Manufacturer	Manufacturer's part number
Input mixer A2 (contd.)				
IC1	28461/464	IC-ANALOGUE MICROWAVE-AMP INA-03184... 4V 10mA GAIN 25dB @ 1.5GHz, 3dB BANDWIDTH DC-2.5GHz,	HEWLETT-PACKARD	INA-03184-TR1
IC2	28531/028	RF-MIXER DOUBLE-BALANCED, DIODE RING, LMX156A-1... 1.0-2.8GHz, 50R 1 dBm RF-1dB COMPRESS, 8 dB LOSS,	MINI-CIRCUITS	LMX-156A-1
L10	23642/064	INDUCTOR-FIXED 1mH +/- 10% UNSCREENED, AIR-CORED, 510mA 1R176 MAX, 20 Q @ 0.796 MHz, 13mm HIGH MAX,	TOKO (UK) LTD	494HYF0140K
L14	23642/535	INDUCTOR-FIXED 1uH +/- 5% EPOXY-MOULD, 400mA 0R7 MAX, 30 Q @ 7.96 MHz, 120 MHz SRF, SURFACE	MEGGITT ELECTRONICS	3612-T-1R0-J
L15	23642/719	INDUCTOR-FIXED 220uH +/- 5% EPOXY-MOULD, 50mA 21R MAX, 20 Q @ 0.796 MHz, 7 MHz SRF, SURFACE MOUNTED,	MEGGITT ELECTRONICS	3612-T-221-J
L16	23642/535	INDUCTOR-FIXED 1uH +/- 5% EPOXY-MOULD, 400mA 0R7 MAX, 30 Q @ 7.96 MHz, 120 MHz SRF, SURFACE	MEGGITT ELECTRONICS	3612-T-1R0-J
L17	23642/719	INDUCTOR-FIXED 220uH +/- 5% EPOXY-MOULD, 50mA 21R MAX, 20 Q @ 0.796 MHz, 7 MHz SRF, SURFACE MOUNTED,	MEGGITT ELECTRONICS	3612-T-221-J
L18	23642/535	INDUCTOR-FIXED 1uH +/- 5% EPOXY-MOULD, 400mA 0R7 MAX, 30 Q @ 7.96 MHz, 120 MHz SRF, SURFACE	MEGGITT ELECTRONICS	3612-T-1R0-J
L19	23642/719	INDUCTOR-FIXED 220uH +/- 5% EPOXY-MOULD, 50mA 21R MAX, 20 Q @ 0.796 MHz, 7 MHz SRF, SURFACE MOUNTED,	MEGGITT ELECTRONICS	3612-T-221-J
R3	24811/167	RESISTOR-FIXED METAL-FILM 562R +/- 1% 250mW 200V 50 ppm/DEG.C, SURFACE MOUNTED, SIZE MINI-MELF,	VISHAY COMPONENTS	SMM0204-562R-1%50ppm
R4	24811/164	RESISTOR-FIXED METAL-FILM 432R +/- 1% 250mW 200V 50 ppm/DEG.C, SURFACE MOUNTED, SIZE MINI-MELF,	VISHAY COMPONENTS	SMM0204-432R-1%50ppm
R5	24811/153	RESISTOR-FIXED METAL-FILM 150R +/- 1% 250mW 200V 50 ppm/DEG.C, SURFACE MOUNTED, SIZE MINI-MELF,	VISHAY COMPONENTS	SMM0204-150R-1%50ppm
R6	24811/173	RESISTOR-FIXED METAL-FILM 1K +/- 1% 250mW 200V 50 ppm/DEG.C, SURFACE MOUNTED, SIZE MINI-MELF, (8mm	VISHAY COMPONENTS	SMM0204-1K0-1%-50ppm
R7	24811/168	RESISTOR-FIXED METAL-FILM 619R +/- 1% 250mW 200V 50 ppm/DEG.C, SURFACE MOUNTED, SIZE MINI-MELF,	VISHAY COMPONENTS	SMM0204-619R-1%50ppm
R8	24811/157	RESISTOR-FIXED METAL-FILM 221R +/- 1% 250mW 200V 50 ppm/DEG.C, SURFACE MOUNTED, SIZE MINI-MELF,	VISHAY COMPONENTS	SMM0204-221R-1%50ppm
R9	24811/155	RESISTOR-FIXED METAL-FILM 182R +/- 1% 250mW 200V 50 ppm/DEG.C, SURFACE MOUNTED, SIZE MINI-MELF,	VISHAY COMPONENTS	SMM0204-182R-1%50ppm
R10	24811/160	RESISTOR-FIXED METAL-FILM 301R +/- 1% 250mW 200V 50 ppm/DEG.C, SURFACE MOUNTED, SIZE MINI-MELF,	VISHAY COMPONENTS	SMM0204-301R-1%50ppm
R11	24811/903	RESISTOR-FIXED METAL-FILM 18R2 +/- 1% 250mW 200V 50 ppm/DEG.C, LOW-INDUCTANCE, SURFACE MOUNTED,	VISHAY COMPONENTS	SMM0204-HF-18R2-1%
R12	24811/160	RESISTOR-FIXED METAL-FILM 301R +/- 1% 250mW 200V 50 ppm/DEG.C, SURFACE MOUNTED, SIZE MINI-MELF,	VISHAY COMPONENTS	SMM0204-301R-1%50ppm
R13	24811/185	RESISTOR-FIXED METAL-FILM 3K32 +/- 1% 250mW 200V 50 ppm/DEG.C, SURFACE MOUNTED, SIZE MINI-MELF,	VISHAY COMPONENTS	SMM0204-3K32-1%50ppm
R14	24811/181	RESISTOR-FIXED METAL-FILM 2K21 +/- 1% 250mW 200V 50 ppm/DEG.C, SURFACE MOUNTED, SIZE MINI-MELF,	VISHAY COMPONENTS	SMM0204-2K21-1%50ppm
R15	24811/173	RESISTOR-FIXED METAL-FILM 1K +/- 1% 250mW 200V 50 ppm/DEG.C, SURFACE MOUNTED, SIZE MINI-MELF, (8mm	VISHAY COMPONENTS	SMM0204-1K0-1%-50ppm
R16	24811/181	RESISTOR-FIXED METAL-FILM 2K21 +/- 1% 250mW 200V 50 ppm/DEG.C, SURFACE MOUNTED, SIZE MINI-MELF,	VISHAY COMPONENTS	SMM0204-2K21-1%50ppm
R17	24811/181	RESISTOR-FIXED METAL-FILM 2K21 +/- 1% 250mW 200V 50 ppm/DEG.C, SURFACE MOUNTED, SIZE MINI-MELF,	VISHAY COMPONENTS	SMM0204-2K21-1%50ppm

Cir. Ref.	MI part number	Description	Manufacturer	Manufacturer's part number
Input mixer A2 (contd.)				
R18	24811/197	RESISTOR-FIXED METAL-FILM 10K +/- 1% 250mW 200V 50 ppm/DEG.C, SURFACE MOUNTED, SIZE MINI-MELF, (8mm	VISHAY COMPONENTS	SMM0204-10K-1%50ppm
R20	24811/155	RESISTOR-FIXED METAL-FILM 182R +/- 1% 250mW 200V 50 ppm/DEG.C, SURFACE MOUNTED, SIZE MINI-MELF,	VISHAY COMPONENTS	SMM0204-182R-1%50ppm
R21	24811/155	RESISTOR-FIXED METAL-FILM 182R +/- 1% 250mW 200V 50 ppm/DEG.C, SURFACE MOUNTED, SIZE MINI-MELF,	VISHAY COMPONENTS	SMM0204-182R-1%50ppm
R23 to R25	24811/173	RESISTOR-FIXED METAL-FILM 1K +/- 1% 250mW 200V 50 ppm/DEG.C, SURFACE MOUNTED, SIZE MINI-MELF, (8mm	VISHAY COMPONENTS	SMM0204-1K0-1%-50ppm
TR1	28487/811	TRANSISTOR NPN BIPOLAR BC818-40... 25V 170MHz 330mW 500mA 250hFE MIN @ 100mA, MARKING CODE 6G,	PHILIPS	BC818-40
TR2	28487/811	TRANSISTOR NPN BIPOLAR BC818-40... 25V 170MHz 330mW 500mA 250hFE MIN @ 100mA, MARKING CODE 6G,	PHILIPS	BC818-40
TR3	28435/241	TRANSISTOR PNP BIPOLAR BCX17... 45V 100MHz 425mW 500mA 100hFE MIN @ 100mA, MARKING CODE T1, SURFACE	PHILIPS	BCX17
TR4	28435/241	TRANSISTOR PNP BIPOLAR BCX17... 45V 100MHz 425mW 500mA 100hFE MIN @ 100mA, MARKING CODE T1, SURFACE	PHILIPS	BCX17

Cir. Ref.	MI part number	Description	Manufacturer	Manufacturer's part number

2nd & 3rd mixer A3

When ordering, prefix circuit reference with A3.

	44829-923	Complete unit	Issue 014	
C1	26878/402	CAPACITOR-VARIABLE PTFE 2pF to 15pF 200 ppm/DEG.C, VERTICAL-PCB MOUNT, 5mm DIA, 5mm PWP, 2 PIN, CODED	DAU COMPONENTS LTD	105-3901-015
C2	26343/430	CAPACITOR-FIXED CERAMIC 39pF +/-2% 63V N150 SINGLELAYER, RADIAL, 2.5mm PWP, (TAPED).	VISHAY COMPONENTS	ROP-390-GAK-ACR-J
C3	26343/489	CAPACITOR-FIXED CERAMIC 22pF +/-2% 63V N150 SINGLELAYER, RADIAL, 2.5mm PWP, (TAPED).	VISHAY COMPONENTS	ROP-220-GAK-ACR-J
C4	26386/871	CAPACITOR-FIXED CERAMIC 4.7nF +/-10% 50V X7R/2C1, MULTILAYER, SURFACE-MOUNTED, SIZE 0805, NICKEL	ROHM ELECTRONICS LTD	MCH21-5C-472-KP
C5	26386/871	CAPACITOR-FIXED CERAMIC 4.7nF +/-10% 50V X7R/2C1, MULTILAYER, SURFACE-MOUNTED, SIZE 0805, NICKEL	ROHM ELECTRONICS LTD	MCH21-5C-472-KP
C6	26343/499	CAPACITOR-FIXED CERAMIC 27pF +/-2% 63V N150 SINGLELAYER, RADIAL, 2.5mm PWP, (TAPED).	VISHAY COMPONENTS	ROP-270-GAK-ACR-J
C7 to C9	26386/871	CAPACITOR-FIXED CERAMIC 4.7nF +/-10% 50V X7R/2C1, MULTILAYER, SURFACE-MOUNTED, SIZE 0805, NICKEL	ROHM ELECTRONICS LTD	MCH21-5C-472-KP
C10	26343/494	CAPACITOR-FIXED CERAMIC 33pF +/-2% 63V N150 SINGLELAYER, RADIAL, 2.5mm PWP, (TAPED).	VISHAY COMPONENTS	ROP-330-GAK-ACR-J
C11 to C16	26386/871	CAPACITOR-FIXED CERAMIC 4.7nF +/-10% 50V X7R/2C1, MULTILAYER, SURFACE-MOUNTED, SIZE 0805, NICKEL	ROHM ELECTRONICS LTD	MCH21-5C-472-KP
C17	26386/813	CAPACITOR-FIXED CERAMIC 12pF +/-5% 50V NP0 MULTILAYER, SURFACE-MOUNTED, SIZE 0805, NICKEL	ROHM ELECTRONICS LTD	MCH21-5A-120-JP
C18 to C21	26386/871	CAPACITOR-FIXED CERAMIC 4.7nF +/-10% 50V X7R/2C1, MULTILAYER, SURFACE-MOUNTED, SIZE 0805, NICKEL	ROHM ELECTRONICS LTD	MCH21-5C-472-KP
C22	26386/819	CAPACITOR-FIXED CERAMIC 39pF +/-5% 50V NP0 MULTILAYER, SURFACE-MOUNTED, SIZE 0805, NICKEL	ROHM ELECTRONICS LTD	MCH21-5A-390-JP
C23	26386/881	CAPACITOR-FIXED CERAMIC 33nF +/-10% 50V X7R/2C1, MULTILAYER, SURFACE-MOUNTED, SIZE 1210, NICKEL	ROHM ELECTRONICS LTD	MCH32-5C-333-KP
C24 to C30	26386/871	CAPACITOR-FIXED CERAMIC 4.7nF +/-10% 50V X7R/2C1, MULTILAYER, SURFACE-MOUNTED, SIZE 0805, NICKEL	ROHM ELECTRONICS LTD	MCH21-5C-472-KP
C31	26386/881	CAPACITOR-FIXED CERAMIC 33nF +/-10% 50V X7R/2C1, MULTILAYER, SURFACE-MOUNTED, SIZE 1210, NICKEL	ROHM ELECTRONICS LTD	MCH32-5C-333-KP
C32	26451/004	CAPACITOR-FIXED ALUMINIUM 10uF +/-20% 35V ELECTROLYTIC, SURFACE-MOUNTED, SIZE 5.3 x 5.3mm,	DUBILIER CAPACITORS	DVC-10/35-T/R
C35	26878/402	CAPACITOR-VARIABLE PTFE 2pF to 15pF 200 ppm/DEG.C, VERTICAL-PCB MOUNT, 5mm DIA, 5mm PWP, 2 PIN, CODED	DAU COMPONENTS LTD	105-3901-015
C36	26386/871	CAPACITOR-FIXED CERAMIC 4.7nF +/-10% 50V X7R/2C1, MULTILAYER, SURFACE-MOUNTED, SIZE 0805, NICKEL	ROHM ELECTRONICS LTD	MCH21-5C-472-KP
C37	26386/871	CAPACITOR-FIXED CERAMIC 4.7nF +/-10% 50V X7R/2C1, MULTILAYER, SURFACE-MOUNTED, SIZE 0805, NICKEL	ROHM ELECTRONICS LTD	MCH21-5C-472-KP
C38	26386/804	CAPACITOR-FIXED CERAMIC 2.2pF +/-0.5pF 50V NPO MULTILAYER, SURFACE-MOUNTED, SIZE 0805, NICKEL	ROHM ELECTRONICS LTD	MCH21-5A-2R2-DP
C39	26386/804	CAPACITOR-FIXED CERAMIC 2.2pF +/-0.5pF 50V NPO MULTILAYER, SURFACE-MOUNTED, SIZE 0805, NICKEL	ROHM ELECTRONICS LTD	MCH21-5A-2R2-DP
C45	26343/432	CAPACITOR-FIXED CERAMIC 150pF +/-2% 63V N150 SINGLELAYER, RADIAL, 2.5mm PWP, (TAPED).	VISHAY COMPONENTS	RPO-151-GAK-ACR-J
C46	26343/438	CAPACITOR-FIXED CERAMIC 120pF +/-2% 63V N150 SINGLELAYER, RADIAL, 2.5mm PWP, (TAPED).	VISHAY COMPONENTS	ROP-121-GAK-ACR-J

Clr. Ref.	MI part number	Description	Manufacturer	Manufacturer's part number
2nd and 3rd mixer (contd.)				
C47	26343/446	CAPACITOR-FIXED CERAMIC 180pF +/-2% 63V N750 SINGLELAYER, RADIAL, 2.5mm PWP, (TAPED).	VISHAY COMPONENTS	ROU-181-GAK-ACR-J
C48	26343/446	CAPACITOR-FIXED CERAMIC 180pF +/-2% 63V N750 SINGLELAYER, RADIAL, 2.5mm PWP, (TAPED).	VISHAY COMPONENTS	ROU-181-GAK-ACR-J
C55	26451/003	CAPACITOR-FIXED ALUMINIUM 10uF +/-20% 16V ELECTROLYTIC, SURFACE-MOUNTED, SIZE 4.3 x 4.3mm,	PANASONIC INDUSTRIAL	ECE-V-1CA-100R
C56 to C60	26386/871	CAPACITOR-FIXED CERAMIC 4.7nF +/-10% 50V X7R/2C1, MULTILAYER, SURFACE-MOUNTED, SIZE 0805, NICKEL	ROHM ELECTRONICS LTD	MCH21-5C-472-KP
D2	28371/768	DIODE ZENER, BZX84-C9V1... 250mW 9.1V 5% 250mA MARKING CODE Z8, SURFACE MOUNTED, SOT-23, (8mm	PHILIPS	BZX84-C9V1
D3 to D5	28335/670	DIODE BAND SWITCHING, BAT18... 35V 100mA 1pF MAX @ 20V, 1.2Vf @ 100mA, MARKING CODE A2, SURFACE	PHILIPS	BAT18/T1
FL1	23642/953	FILTER BANDPASS, PCB-MOUNT, CERAMIC, 1355MHz +/-2MHz, BANDWIDTH 30MHz @ 3dB & 200MHz @ 60dB,	RACAL-MESL LTD	LQ2425
IC1	28531/027	RF-MIXER DOUBLE-BALANCED, DIODE RING, SCM-2500... 0.5-2.5GHz, 50R 1 dBm RF-1dB COMPRESS, 6 dB LOSS,	MINI-CIRCUITS	SCM-2500NL
IC2	28531/021B	RF-MIXER DOUBLE-BALANCED, SL6440C... 150MHz MAX, 15 dBm RF-1dB COMPRESS, +30dBm INTERCEPT,		
IC3	28461/342	IC-ANALOGUE OPERATIONAL AMP LM358... DUAL, 32V 1MHz BANDWIDTH, INPUT VOLTAGE RANGE 0 TO Vcc-1.5V,	PHILIPS	LM358N
L2 to L4	23642/970	INDUCTOR-VARIABLE 0.05uH NOM, UNSCREENED, 2 PIN, 8.2mm SQUARE PCB MOUNT BASE, Q>120 @ 100MHz, 2.5	TOKO (UK) LTD	E525HNS-100002
L5	23642/519	INDUCTOR-FIXED 0.068uH +/- 5% EPOXY-MOULD, 450mA 0R36 MAX, 27 Q @ 100 MHz, 1K MHz SRF, SURFACE	MEGGITT ELECTRONICS	3612-T-068-J
L6	23642/519	INDUCTOR-FIXED 0.068uH +/- 5% EPOXY-MOULD, 450mA 0R36 MAX, 27 Q @ 100 MHz, 1K MHz SRF, SURFACE	MEGGITT ELECTRONICS	3612-T-068-J
L7	23642/533	INDUCTOR-FIXED 10uH +/- 5% EPOXY-MOULD, 150mA 2R1 MAX, 30 Q @ 2.52 MHz, 36 MHz SRF, SURFACE MOUNTED,	MEGGITT ELECTRONICS	3612-T-100-J
L8	23642/537	INDUCTOR-FIXED 4.7uH +/- 5% EPOXY-MOULD, 220mA 1R5 MAX, 30 Q @ 7.96 MHz, 50 MHz SRF, SURFACE MOUNTED,	MEGGITT ELECTRONICS	3612-T-4R7-J
L9	23642/716	INDUCTOR-FIXED 3.3uH +/- 5% EPOXY-MOULD, 260mA 1R2 MAX, 30 Q @ 7.96 MHz, 60 MHz SRF, SURFACE MOUNTED,	MEGGITT ELECTRONICS	3612-T-3R3-J
L14	23642/537	INDUCTOR-FIXED 4.7uH +/- 5% EPOXY-MOULD, 220mA 1R5 MAX, 30 Q @ 7.96 MHz, 50 MHz SRF, SURFACE MOUNTED,	MEGGITT ELECTRONICS	3612-T-4R7-J
R2	24811/180	RESISTOR-FIXED METAL-FILM 2K +/- 1% 250mW 200V 50 ppm/DEG.C, SURFACE MOUNTED, SIZE MINI-MELF, (8mm	VISHAY COMPONENTS	SMM0204-2K0-1%50ppm
R3	24811/180	RESISTOR-FIXED METAL-FILM 2K +/- 1% 250mW 200V 50 ppm/DEG.C, SURFACE MOUNTED, SIZE MINI-MELF, (8mm	VISHAY COMPONENTS	SMM0204-2K0-1%50ppm
R4	24811/142	RESISTOR-FIXED METAL-FILM 51R1 +/- 1% 250mW 200V 50 ppm/DEG.C, SURFACE MOUNTED, SIZE MINI-MELF,	VISHAY COMPONENTS	SMM0204-51R1-1%50ppm

2nd and 3rd mixer (contd.)

Cir. Ref.	MI part number	Description	Manufacturer	Manufacturer's part number
R5	24811/127	RESISTOR-FIXED METAL-FILM 12R1 +/- 1% 250mW 200V 50 ppm/DEG.C, SURFACE MOUNTED, SIZE MINI-MELF,	VISHAY COMPONENTS	SMM0204-12R1-1%50ppm
R6	24811/171	RESISTOR-FIXED METAL-FILM 825R +/- 1% 250mW 200V 50 ppm/DEG.C, SURFACE MOUNTED, SIZE MINI-MELF,	VISHAY COMPONENTS	SMM0204-825R-1%50ppm
R7	24811/146	RESISTOR-FIXED METAL-FILM 75R +/- 1% 250mW 200V 50 ppm/DEG.C, SURFACE MOUNTED, SIZE MINI-MELF, (8mm	VISHAY COMPONENTS	SMM0204-75R0-1%50ppm
R8	24811/195	RESISTOR-FIXED METAL-FILM 8K25 +/- 1% 250mW 200V 50 ppm/DEG.C, SURFACE MOUNTED, SIZE MINI-MELF,	VISHAY COMPONENTS	SMM0204-8K25-1%50ppm
R9	24811/185	RESISTOR-FIXED METAL-FILM 3K32 +/- 1% 250mW 200V 50 ppm/DEG.C, SURFACE MOUNTED, SIZE MINI-MELF,	VISHAY COMPONENTS	SMM0204-3K32-1%50ppm
R10	24811/189	RESISTOR-FIXED METAL-FILM 4K75 +/- 1% 250mW 200V 50 ppm/DEG.C, SURFACE MOUNTED, SIZE MINI-MELF,	VISHAY COMPONENTS	SMM0204-4K75-1%50ppm
R11	24811/142	RESISTOR-FIXED METAL-FILM 51R1 +/- 1% 250mW 200V 50 ppm/DEG.C, SURFACE MOUNTED, SIZE MINI-MELF,	VISHAY COMPONENTS	SMM0204-51R1-1%50ppm
R12	24811/171	RESISTOR-FIXED METAL-FILM 825R +/- 1% 250mW 200V 50 ppm/DEG.C, SURFACE MOUNTED, SIZE MINI-MELF,	VISHAY COMPONENTS	SMM0204-825R-1%50ppm
R13	24811/146	RESISTOR-FIXED METAL-FILM 75R +/- 1% 250mW 200V 50 ppm/DEG.C, SURFACE MOUNTED, SIZE MINI-MELF, (8mm	VISHAY COMPONENTS	SMM0204-75R0-1%50ppm
R14	24811/127	RESISTOR-FIXED METAL-FILM 12R1 +/- 1% 250mW 200V 50 ppm/DEG.C, SURFACE MOUNTED, SIZE MINI-MELF,	VISHAY COMPONENTS	SMM0204-12R1-1%50ppm
R15	24811/172	RESISTOR-FIXED METAL-FILM 909R +/- 1% 250mW 200V 50 ppm/DEG.C, SURFACE MOUNTED, SIZE MINI-MELF,	VISHAY COMPONENTS	SMM0204-909R-1%50ppm
R16	24811/160	RESISTOR-FIXED METAL-FILM 301R +/- 1% 250mW 200V 50 ppm/DEG.C, SURFACE MOUNTED, SIZE MINI-MELF,	VISHAY COMPONENTS	SMM0204-301R-1%50ppm
R17	24811/167	RESISTOR-FIXED METAL-FILM 562R +/- 1% 250mW 200V 50 ppm/DEG.C, SURFACE MOUNTED, SIZE MINI-MELF,	VISHAY COMPONENTS	SMM0204-562R-1%50ppm
R18	24811/127	RESISTOR-FIXED METAL-FILM 12R1 +/- 1% 250mW 200V 50 ppm/DEG.C, SURFACE MOUNTED, SIZE MINI-MELF,	VISHAY COMPONENTS	SMM0204-12R1-1%50ppm
R19	24811/171	RESISTOR-FIXED METAL-FILM 825R +/- 1% 250mW 200V 50 ppm/DEG.C, SURFACE MOUNTED, SIZE MINI-MELF,	VISHAY COMPONENTS	SMM0204-825R-1%50ppm
R20	24811/180	RESISTOR-FIXED METAL-FILM 2K +/- 1% 250mW 200V 50 ppm/DEG.C, SURFACE MOUNTED, SIZE MINI-MELF, (8mm	VISHAY COMPONENTS	SMM0204-2K0-1%50ppm
R21	24811/173	RESISTOR-FIXED METAL-FILM 1K +/- 1% 250mW 200V 50 ppm/DEG.C, SURFACE MOUNTED, SIZE MINI-MELF, (8mm	VISHAY COMPONENTS	SMM0204-1K0-1%-50ppm
R22	24811/180	RESISTOR-FIXED METAL-FILM 2K +/- 1% 250mW 200V 50 ppm/DEG.C, SURFACE MOUNTED, SIZE MINI-MELF, (8mm	VISHAY COMPONENTS	SMM0204-2K0-1%50ppm
R23	24811/127	RESISTOR-FIXED METAL-FILM 12R1 +/- 1% 250mW 200V 50 ppm/DEG.C, SURFACE MOUNTED, SIZE MINI-MELF,	VISHAY COMPONENTS	SMM0204-12R1-1%50ppm
R24	24811/195	RESISTOR-FIXED METAL-FILM 8K25 +/- 1% 250mW 200V 50 ppm/DEG.C, SURFACE MOUNTED, SIZE MINI-MELF,	VISHAY COMPONENTS	SMM0204-8K25-1%50ppm
R25	24811/185	RESISTOR-FIXED METAL-FILM 3K32 +/- 1% 250mW 200V 50 ppm/DEG.C, SURFACE MOUNTED, SIZE MINI-MELF,	VISHAY COMPONENTS	SMM0204-3K32-1%50ppm
R26	24811/189	RESISTOR-FIXED METAL-FILM 4K75 +/- 1% 250mW 200V 50 ppm/DEG.C, SURFACE MOUNTED, SIZE MINI-MELF,	VISHAY COMPONENTS	SMM0204-4K75-1%50ppm
R27	24811/142	RESISTOR-FIXED METAL-FILM 51R1 +/- 1% 250mW 200V 50 ppm/DEG.C, SURFACE MOUNTED, SIZE MINI-MELF,	VISHAY COMPONENTS	SMM0204-51R1-1%50ppm
R28	24811/171	RESISTOR-FIXED METAL-FILM 825R +/- 1% 250mW 200V 50 ppm/DEG.C, SURFACE MOUNTED, SIZE MINI-MELF,	VISHAY COMPONENTS	SMM0204-825R-1%50ppm
R29	24811/155	RESISTOR-FIXED METAL-FILM 182R +/- 1% 250mW 200V 50 ppm/DEG.C, SURFACE MOUNTED, SIZE MINI-MELF,	VISHAY COMPONENTS	SMM0204-182R-1%50ppm
R30	24811/197	RESISTOR-FIXED METAL-FILM 10K +/- 1% 250mW 200V 50 ppm/DEG.C, SURFACE MOUNTED, SIZE MINI-MELF, (8mm	VISHAY COMPONENTS	SMM0204-10K-1%50ppm

Cir. Ref.	MI part number	Description	Manufacturer	Manufacturer's part number
2nd and 3rd mixer (contd.)				
R31	24811/171	RESISTOR-FIXED METAL-FILM 825R +/- 1% 250mW 200V 50 ppm/DEG.C, SURFACE MOUNTED, SIZE MINI-MELF,	VISHAY COMPONENTS	SMM0204-825R-1%50ppm
R34	24811/144	RESISTOR-FIXED METAL-FILM 61R9 +/- 1% 250mW 200V 50 ppm/DEG.C, SURFACE MOUNTED, SIZE MINI-MELF,	VISHAY COMPONENTS	SMM0204-61R9-1%50ppm
R35	24811/142	RESISTOR-FIXED METAL-FILM 51R1 +/- 1% 250mW 200V 50 ppm/DEG.C, SURFACE MOUNTED, SIZE MINI-MELF,	VISHAY COMPONENTS	SMM0204-51R1-1%50ppm
R36	24811/203	RESISTOR-FIXED METAL-FILM 18K2 +/- 1% 250mW 200V 50 ppm/DEG.C, SURFACE MOUNTED, SIZE MINI-MELF,	VISHAY COMPONENTS	SMM0204-18K2-1%50ppm
R37	24811/163	RESISTOR-FIXED METAL-FILM 392R +/- 1% 250mW 200V 50 ppm/DEG.C, SURFACE MOUNTED, SIZE MINI-MELF,	VISHAY COMPONENTS	SMM0204-392R-1%50ppm
R38	24811/163	RESISTOR-FIXED METAL-FILM 392R +/- 1% 250mW 200V 50 ppm/DEG.C, SURFACE MOUNTED, SIZE MINI-MELF,	VISHAY COMPONENTS	SMM0204-392R-1%50ppm
R42	24811/173	RESISTOR-FIXED METAL-FILM 1K +/- 1% 250mW 200V 50 ppm/DEG.C, SURFACE MOUNTED, SIZE MINI-MELF, (8mm	VISHAY COMPONENTS	SMM0204-1K0-1%-50ppm
R43	24811/166	RESISTOR-FIXED METAL-FILM 511R +/- 1% 250mW 200V 50 ppm/DEG.C, SURFACE MOUNTED, SIZE MINI-MELF,	VISHAY COMPONENTS	SMM0204-511R-1%50ppm
R44	24811/142	RESISTOR-FIXED METAL-FILM 51R1 +/- 1% 250mW 200V 50 ppm/DEG.C, SURFACE MOUNTED, SIZE MINI-MELF,	VISHAY COMPONENTS	SMM0204-51R1-1%50ppm
R45	24811/142	RESISTOR-FIXED METAL-FILM 51R1 +/- 1% 250mW 200V 50 ppm/DEG.C, SURFACE MOUNTED, SIZE MINI-MELF,	VISHAY COMPONENTS	SMM0204-51R1-1%50ppm
R46	24811/219	RESISTOR-FIXED METAL-FILM 82K5 +/- 1% 250mW 200V 50 ppm/DEG.C, SURFACE MOUNTED, SIZE MINI-MELF,	VISHAY COMPONENTS	SMM0204-82K5-1%50ppm
R47	24811/211	RESISTOR-FIXED METAL-FILM 39K2 +/- 1% 250mW 200V 50 ppm/DEG.C, SURFACE MOUNTED, SIZE MINI-MELF,	VISHAY COMPONENTS	SMM0204-39K2-1%50ppm
R48	24811/203	RESISTOR-FIXED METAL-FILM 18K2 +/- 1% 250mW 200V 50 ppm/DEG.C, SURFACE MOUNTED, SIZE MINI-MELF,	VISHAY COMPONENTS	SMM0204-18K2-1%50ppm
TR1	28457/851	TRANSISTOR NPN BIPOLAR BFS17... 15V 1.3GHz 250mW 50mA 20hFE MIN @ 2mA, MARKING CODE E1, SURFACE	PHILIPS	BFS17
TR2	28457/851	TRANSISTOR NPN BIPOLAR BFS17... 15V 1.3GHz 250mW 50mA 20hFE MIN @ 2mA, MARKING CODE E1, SURFACE	PHILIPS	BFS17
TR3	28457/851	TRANSISTOR NPN BIPOLAR BFS17... 15V 1.3GHz 250mW 50mA 20hFE MIN @ 2mA, MARKING CODE E1, SURFACE	PHILIPS	BFS17
TR4	28457/851	TRANSISTOR NPN BIPOLAR BFS17... 15V 1.3GHz 250mW 50mA 20hFE MIN @ 2mA, MARKING CODE E1, SURFACE	PHILIPS	BFS17
TR5	28457/851	TRANSISTOR NPN BIPOLAR BFS17... 15V 1.3GHz 250mW 50mA 20hFE MIN @ 2mA, MARKING CODE E1, SURFACE	PHILIPS	BFS17
TR6	28457/851	TRANSISTOR NPN BIPOLAR BFS17... 15V 1.3GHz 250mW 50mA 20hFE MIN @ 2mA, MARKING CODE E1, SURFACE	PHILIPS	BFS17
TR7	28457/851	TRANSISTOR NPN BIPOLAR BFS17... 15V 1.3GHz 250mW 50mA 20hFE MIN @ 2mA, MARKING CODE E1, SURFACE	PHILIPS	BFS17

Clr. Ref.	MI part number	Description	Manufacturer	Manufacturer's part number

10.7 MHz IF amplifier and Log. amplifier A4/1

When ordering, prefix circuit reference with A4/1.

	44830-103	Complete unit		Issue 003
C2 to C5	26386/871	CAPACITOR-FIXED CERAMIC 4.7nF +/-10% 50V X7R/2C1, MULTILAYER, SURFACE-MOUNTED, SIZE 0805, NICKEL	ROHM ELECTRONICS LTD	MCH21-5C-472-KP
C9	26343/784	CAPACITOR-FIXED CERAMIC 68pF +/-5% 50V NPO MULTILAYER, SURFACE-MOUNTED, SIZE 0805, NICKEL	ROHM ELECTRONICS LTD	MCH21-5A-680-JP
C10 to C14	26386/871	CAPACITOR-FIXED CERAMIC 4.7nF +/-10% 50V X7R/2C1, MULTILAYER, SURFACE-MOUNTED, SIZE 0805, NICKEL	ROHM ELECTRONICS LTD	MCH21-5C-472-KP
C15	26386/777	CAPACITOR-FIXED CERAMIC 47nF +/-20% 63V X7R/2C1, MULTILAYER, SURFACE-MOUNTED, SIZE 1206, NICKEL	PHILIPS	1206-2R-473-K9-BBC
C16	26386/814	CAPACITOR-FIXED CERAMIC 15pF +/-5% 50V NP0 MULTILAYER, SURFACE-MOUNTED, SIZE 0805, NICKEL	ROHM ELECTRONICS LTD	MCH21-5A-150-JP
C17	26878/402	CAPACITOR-VARIABLE PTFE 2pF to 15pF 200 ppm/DEG.C, VERTICAL-PCB MOUNT, 5mm DIA, 5mm PWP, 2 PIN, CODED	DAU COMPONENTS LTD	105-3901-015
C18	26386/871	CAPACITOR-FIXED CERAMIC 4.7nF +/-10% 50V X7R/2C1, MULTILAYER, SURFACE-MOUNTED, SIZE 0805, NICKEL	ROHM ELECTRONICS LTD	MCH21-5C-472-KP
C19	26386/871	CAPACITOR-FIXED CERAMIC 4.7nF +/-10% 50V X7R/2C1, MULTILAYER, SURFACE-MOUNTED, SIZE 0805, NICKEL	ROHM ELECTRONICS LTD	MCH21-5C-472-KP
C20	26386/803	CAPACITOR-FIXED CERAMIC 1.8pF +/-0.5pF 50V NP0 MULTILAYER, SURFACE-MOUNTED, SIZE 0805, NICKEL	ROHM ELECTRONICS LTD	MCH21-5A-1R8-DP
C21	26878/402	CAPACITOR-VARIABLE PTFE 2pF to 15pF 200 ppm/DEG.C, VERTICAL-PCB MOUNT, 5mm DIA, 5mm PWP, 2 PIN, CODED	DAU COMPONENTS LTD	105-3901-015
C22 to C25	26386/871	CAPACITOR-FIXED CERAMIC 4.7nF +/-10% 50V X7R/2C1, MULTILAYER, SURFACE-MOUNTED, SIZE 0805, NICKEL	ROHM ELECTRONICS LTD	MCH21-5C-472-KP
C26	26386/814	CAPACITOR-FIXED CERAMIC 15pF +/-5% 50V NP0 MULTILAYER, SURFACE-MOUNTED, SIZE 0805, NICKEL	ROHM ELECTRONICS LTD	MCH21-5A-150-JP
C27	26878/402	CAPACITOR-VARIABLE PTFE 2pF to 15pF 200 ppm/DEG.C, VERTICAL-PCB MOUNT, 5mm DIA, 5mm PWP, 2 PIN, CODED	DAU COMPONENTS LTD	105-3901-015
C28	26386/871	CAPACITOR-FIXED CERAMIC 4.7nF +/-10% 50V X7R/2C1, MULTILAYER, SURFACE-MOUNTED, SIZE 0805, NICKEL	ROHM ELECTRONICS LTD	MCH21-5C-472-KP
C29	26386/871	CAPACITOR-FIXED CERAMIC 4.7nF +/-10% 50V X7R/2C1, MULTILAYER, SURFACE-MOUNTED, SIZE 0805, NICKEL	ROHM ELECTRONICS LTD	MCH21-5C-472-KP
C30	26386/803	CAPACITOR-FIXED CERAMIC 1.8pF +/-0.5pF 50V NP0 MULTILAYER, SURFACE-MOUNTED, SIZE 0805, NICKEL	ROHM ELECTRONICS LTD	MCH21-5A-1R8-DP
C31	26878/402	CAPACITOR-VARIABLE PTFE 2pF to 15pF 200 ppm/DEG.C, VERTICAL-PCB MOUNT, 5mm DIA, 5mm PWP, 2 PIN, CODED	DAU COMPONENTS LTD	105-3901-015
C32 to C43	26386/871	CAPACITOR-FIXED CERAMIC 4.7nF +/-10% 50V X7R/2C1, MULTILAYER, SURFACE-MOUNTED, SIZE 0805, NICKEL	ROHM ELECTRONICS LTD	MCH21-5C-472-KP
C44	26386/814	CAPACITOR-FIXED CERAMIC 15pF +/-5% 50V NP0 MULTILAYER, SURFACE-MOUNTED, SIZE 0805, NICKEL	ROHM ELECTRONICS LTD	MCH21-5A-150-JP
C45	26878/402	CAPACITOR-VARIABLE PTFE 2pF to 15pF 200 ppm/DEG.C, VERTICAL-PCB MOUNT, 5mm DIA, 5mm PWP, 2 PIN, CODED	DAU COMPONENTS LTD	105-3901-015
C46	26386/871	CAPACITOR-FIXED CERAMIC 4.7nF +/-10% 50V X7R/2C1, MULTILAYER, SURFACE-MOUNTED, SIZE 0805, NICKEL	ROHM ELECTRONICS LTD	MCH21-5C-472-KP
C47	26386/871	CAPACITOR-FIXED CERAMIC 4.7nF +/-10% 50V X7R/2C1, MULTILAYER, SURFACE-MOUNTED, SIZE 0805, NICKEL	ROHM ELECTRONICS LTD	MCH21-5C-472-KP
C48	26386/803	CAPACITOR-FIXED CERAMIC 1.8pF +/-0.5pF 50V NP0 MULTILAYER, SURFACE-MOUNTED, SIZE 0805, NICKEL	ROHM ELECTRONICS LTD	MCH21-5A-1R8-DP

10.7 MHz IF amplifier and Log. amplifier A4/1 (contd.)

Clr. Ref.	MI part number	Description	Manufacturer	Manufacturer's part number
C49	26878/402	CAPACITOR-VARIABLE PTFE 2pF to 15pF 200 ppm/DEG.C, VERTICAL-PCB MOUNT, 5mm DIA, 5mm PWP, 2 PIN, CODED	DAU COMPONENTS LTD	105-3901-015
C50 to C53	26386/871	CAPACITOR-FIXED CERAMIC 4.7nF +/-10% 50V X7R/2C1, MULTILAYER, SURFACE-MOUNTED, SIZE 0805, NICKEL	ROHM ELECTRONICS LTD	MCH21-5C-472-KP
C54	26386/814	CAPACITOR-FIXED CERAMIC 15pF +/-5% 50V NP0 MULTILAYER, SURFACE-MOUNTED, SIZE 0805, NICKEL	ROHM ELECTRONICS LTD	MCH21-5A-150-JP
C55	26878/402	CAPACITOR-VARIABLE PTFE 2pF to 15pF 200 ppm/DEG.C, VERTICAL-PCB MOUNT, 5mm DIA, 5mm PWP, 2 PIN, CODED	DAU COMPONENTS LTD	105-3901-015
C56	26386/871	CAPACITOR-FIXED CERAMIC 4.7nF +/-10% 50V X7R/2C1, MULTILAYER, SURFACE-MOUNTED, SIZE 0805, NICKEL	ROHM ELECTRONICS LTD	MCH21-5C-472-KP
C57	26386/871	CAPACITOR-FIXED CERAMIC 4.7nF +/-10% 50V X7R/2C1, MULTILAYER, SURFACE-MOUNTED, SIZE 0805, NICKEL	ROHM ELECTRONICS LTD	MCH21-5C-472-KP
C58	26386/803	CAPACITOR-FIXED CERAMIC 1.8pF +/-0.5pF 50V NP0 MULTILAYER, SURFACE-MOUNTED, SIZE 0805, NICKEL	ROHM ELECTRONICS LTD	MCH21-5A-1R8-DP
C59	26878/402	CAPACITOR-VARIABLE PTFE 2pF to 15pF 200 ppm/DEG.C, VERTICAL-PCB MOUNT, 5mm DIA, 5mm PWP, 2 PIN, CODED	DAU COMPONENTS LTD	105-3901-015
C60 to C63	26386/871	CAPACITOR-FIXED CERAMIC 4.7nF +/-10% 50V X7R/2C1, MULTILAYER, SURFACE-MOUNTED, SIZE 0805, NICKEL	ROHM ELECTRONICS LTD	MCH21-5C-472-KP
C64	26386/875	CAPACITOR-FIXED CERAMIC 10nF +/-10% 50V X7R/2C1, MULTILAYER, SURFACE-MOUNTED, SIZE 0805, NICKEL	ROHM ELECTRONICS LTD	MCH21-5C-103-KP
C65 to C80	26386/871	CAPACITOR-FIXED CERAMIC 4.7nF +/-10% 50V X7R/2C1, MULTILAYER, SURFACE-MOUNTED, SIZE 0805, NICKEL	ROHM ELECTRONICS LTD	MCH21-5C-472-KP
C81	26386/899	CAPACITOR-FIXED CERAMIC 100nF +/-10% 50V X7R/2C1, MULTILAYER, SURFACE-MOUNTED, SIZE 1206, NICKEL	ROHM ELECTRONICS LTD	MCH31-5C-104-KP
C82	26451/002	CAPACITOR-FIXED ALUMINIUM 4.7uF +/-20% 35V ELECTROLYTIC, SURFACE-MOUNTED, SIZE 4.3 x 4.3mm,	PANASONIC INDUSTRIAL	ECE-V-1VA-4R7R
C83	26386/899	CAPACITOR-FIXED CERAMIC 100nF +/-10% 50V X7R/2C1, MULTILAYER, SURFACE-MOUNTED, SIZE 1206, NICKEL	ROHM ELECTRONICS LTD	MCH31-5C-104-KP
C84	26451/002	CAPACITOR-FIXED ALUMINIUM 4.7uF +/-20% 35V ELECTROLYTIC, SURFACE-MOUNTED, SIZE 4.3 x 4.3mm,	PANASONIC INDUSTRIAL	ECE-V-1VA-4R7R
C85	26386/871	CAPACITOR-FIXED CERAMIC 4.7nF +/-10% 50V X7R/2C1, MULTILAYER, SURFACE-MOUNTED, SIZE 0805, NICKEL	ROHM ELECTRONICS LTD	MCH21-5C-472-KP
C86	26386/871	CAPACITOR-FIXED CERAMIC 4.7nF +/-10% 50V X7R/2C1, MULTILAYER, SURFACE-MOUNTED, SIZE 0805, NICKEL	ROHM ELECTRONICS LTD	MCH21-5C-472-KP
C100	26386/875	CAPACITOR-FIXED CERAMIC 10nF +/-10% 50V X7R/2C1, MULTILAYER, SURFACE-MOUNTED, SIZE 0805, NICKEL	ROHM ELECTRONICS LTD	MCH21-5C-103-KP
C101	26878/407	CAPACITOR-VARIABLE POLYPROPYLENE 2pF to 22pF 100V VERTICAL-PCB MOUNT, 7.5mm DIA, 10mm LONG, 3 PIN,	PHILIPS	2222-808-11229
C102	26386/824	CAPACITOR-FIXED CERAMIC 100pF +/-5% 50V NP0 MULTILAYER, SURFACE-MOUNTED, SIZE 0805, NICKEL	ROHM ELECTRONICS LTD	MCH21-5A-101-JP
C103	26386/875	CAPACITOR-FIXED CERAMIC 10nF +/-10% 50V X7R/2C1, MULTILAYER, SURFACE-MOUNTED, SIZE 0805, NICKEL	ROHM ELECTRONICS LTD	MCH21-5C-103-KP
C104	26386/824	CAPACITOR-FIXED CERAMIC 100pF +/-5% 50V NP0 MULTILAYER, SURFACE-MOUNTED, SIZE 0805, NICKEL	ROHM ELECTRONICS LTD	MCH21-5A-101-JP
C109	26386/899	CAPACITOR-FIXED CERAMIC 100nF +/-10% 50V X7R/2C1, MULTILAYER, SURFACE-MOUNTED, SIZE 1206, NICKEL	ROHM ELECTRONICS LTD	MCH31-5C-104-KP
C112 to C114	26451/002	CAPACITOR-FIXED ALUMINIUM 4.7uF +/-20% 35V ELECTROLYTIC, SURFACE-MOUNTED, SIZE 4.3 x 4.3mm,	PANASONIC INDUSTRIAL	ECE-V-1VA-4R7R
C125 to C127	26386/871	CAPACITOR-FIXED CERAMIC 4.7nF +/-10% 50V X7R/2C1, MULTILAYER, SURFACE-MOUNTED, SIZE 0805, NICKEL	ROHM ELECTRONICS LTD	MCH21-5C-472-KP
C128	26386/817	CAPACITOR-FIXED CERAMIC 27pF +/-5% 50V NP0 MULTILAYER, SURFACE-MOUNTED, SIZE 0805, NICKEL	ROHM ELECTRONICS LTD	MCH21-5A-270-JP

Cir. Ref.	MI part number	Description	Manufacturer	Manufacturer's part number
10.7 MHz IF amplifier and Log. amplifier A4/1 (contd.)				
C129	26386/804	CAPACITOR-FIXED CERAMIC 2.2pF +/-0.5pF 50V NPO MULTILAYER, SURFACE-MOUNTED, SIZE 0805, NICKEL	ROHM ELECTRONICS LTD	MCH21-5A-2R2-DP
C130	26386/871	CAPACITOR-FIXED CERAMIC 4.7nF +/-10% 50V X7R/2C1, MULTILAYER, SURFACE-MOUNTED, SIZE 0805, NICKEL	ROHM ELECTRONICS LTD	MCH21-5C-472-KP
C140 to C142	26386/875	CAPACITOR-FIXED CERAMIC 10nF +/-10% 50V X7R/2C1, MULTILAYER, SURFACE-MOUNTED, SIZE 0805, NICKEL	ROHM ELECTRONICS LTD	MCH21-5C-103-KP
C143	26386/871	CAPACITOR-FIXED CERAMIC 4.7nF +/-10% 50V X7R/2C1, MULTILAYER, SURFACE-MOUNTED, SIZE 0805, NICKEL	ROHM ELECTRONICS LTD	MCH21-5C-472-KP
C145	26386/875	CAPACITOR-FIXED CERAMIC 10nF +/-10% 50V X7R/2C1, MULTILAYER, SURFACE-MOUNTED, SIZE 0805, NICKEL	ROHM ELECTRONICS LTD	MCH21-5C-103-KP
C146	26386/871	CAPACITOR-FIXED CERAMIC 4.7nF +/-10% 50V X7R/2C1, MULTILAYER, SURFACE-MOUNTED, SIZE 0805, NICKEL	ROHM ELECTRONICS LTD	MCH21-5C-472-KP
C147	26386/875	CAPACITOR-FIXED CERAMIC 10nF +/-10% 50V X7R/2C1, MULTILAYER, SURFACE-MOUNTED, SIZE 0805, NICKEL	ROHM ELECTRONICS LTD	MCH21-5C-103-KP
C148	26386/875	CAPACITOR-FIXED CERAMIC 10nF +/-10% 50V X7R/2C1, MULTILAYER, SURFACE-MOUNTED, SIZE 0805, NICKEL	ROHM ELECTRONICS LTD	MCH21-5C-103-KP
C149	26386/871	CAPACITOR-FIXED CERAMIC 4.7nF +/-10% 50V X7R/2C1, MULTILAYER, SURFACE-MOUNTED, SIZE 0805, NICKEL	ROHM ELECTRONICS LTD	MCH21-5C-472-KP
C150	26386/871	CAPACITOR-FIXED CERAMIC 4.7nF +/-10% 50V X7R/2C1, MULTILAYER, SURFACE-MOUNTED, SIZE 0805, NICKEL	ROHM ELECTRONICS LTD	MCH21-5C-472-KP
C152	26386/875	CAPACITOR-FIXED CERAMIC 10nF +/-10% 50V X7R/2C1, MULTILAYER, SURFACE-MOUNTED, SIZE 0805, NICKEL	ROHM ELECTRONICS LTD	MCH21-5C-103-KP
C153	26386/875	CAPACITOR-FIXED CERAMIC 10nF +/-10% 50V X7R/2C1, MULTILAYER, SURFACE-MOUNTED, SIZE 0805, NICKEL	ROHM ELECTRONICS LTD	MCH21-5C-103-KP
C155	26421/127	CAPACITOR-FIXED ALUMINIUM 470uF +/-20% 16V ELECTROLYTIC, RADIAL, 5mm PWP, (LOOSE OR TAPED).	PHILIPS	2222-037-50471
C156	26421/127	CAPACITOR-FIXED ALUMINIUM 470uF +/-20% 16V ELECTROLYTIC, RADIAL, 5mm PWP, (LOOSE OR TAPED).	PHILIPS	2222-037-50471
C160	26386/871	CAPACITOR-FIXED CERAMIC 4.7nF +/-10% 50V X7R/2C1, MULTILAYER, SURFACE-MOUNTED, SIZE 0805, NICKEL	ROHM ELECTRONICS LTD	MCH21-5C-472-KP
D1 to D16	28335/670	DIODE BAND SWITCHING, BAT18... 35V 100mA 1pF MAX @ 20V, 1.2Vf @ 100mA, MARKING CODE A2, SURFACE	PHILIPS	BAT18/T1
D17	28371/301	DIODE ZENER, BZX84-C4V3... 250mW 4.3V 5% 250mA MARKING CODE Z17/W9, SURFACE MOUNTED, SOT-23, (8mm	PHILIPS	BZX84-C4V3
D18	28383/910	DIODE SMALL-SIGNAL, BAS28... DUAL, 330mW 75V 250mA ELECTRICALLY ISOLATED, MARKING CODE A61 OR JT,	PHILIPS	BAS28
D19	28383/910	DIODE SMALL-SIGNAL, BAS28... DUAL, 330mW 75V 250mA ELECTRICALLY ISOLATED, MARKING CODE A61 OR JT,	PHILIPS	BAS28
D20	28371/494	DIODE VOLTAGE REFERENCE, 1N825... 250mW 6.2V 5% 50mA 20ppm/DEG.C, AXIAL, DO-7, (TAPED).	PHILIPS	1N825
D21	28371/494	DIODE VOLTAGE REFERENCE, 1N825... 250mW 6.2V 5% 50mA 20ppm/DEG.C, AXIAL, DO-7, (TAPED).	PHILIPS	1N825
IC1	28461/843	IC-ANALOGUE SWITCH SD5400... QUAD, 20V BIDIRECTIONAL, SPST, HIGH ISOLATION @ 10MHz, DMOS,	TEMIC UK LTD	SD5400CY
IC2	28461/388	IC-ANALOGUE OPERATIONAL AMP LM324D... QUAD, GEN-PURPOSE, SLEW RATE 0.2V/uS MIN, GAIN BANDWIDTH	PHILIPS	LM324D
IC3	28461/412	IC-ANALOGUE OPERATIONAL AMP TL072... DUAL, 18V UNITY GAIN BNDWDTH 3MHz, OFFSET VOLTAGE 10mV, SLEW	MOTOROLA INC.	TL072CD

Cir. Ref.	MI part number	Description	Manufacturer	Manufacturer's part number
10.7 MHz IF amplifier and Log. amplifier A4/1 (contd.)				
IC4	28461/522	IC-ANALOGUE LIMITING-AMPLIFIER AD606... 5V 20mA 9-STAGE, LOG AMP FREQ 50MHz MAX, LIMITER OUTPUT	ANALOG DEVICES LTD	AD606JR
IC5	28461/412	IC-ANALOGUE OPERATIONAL AMP TL072... DUAL, 18V UNITY GAIN BNDWDTH 3MHz, OFFSET VOLTAGE 10mV, SLEW	MOTOROLA INC.	TL072CD
IC6	28461/882	IC-ANALOGUE OPERATIONAL AMP EL2030... SINGLE, 18V CURRENT FEEDBACK, UNITY GAIN BANDWIDTH 120MHz,	ELANTEC INC	EL2030CN
IC7	28461/734	IC-ANALOGUE VOLTAGE-REGULATOR 78L05AC... 5V 100mA POSITIVE, LINEAR, 5% REGULATION, MONOLITHIC, 3	NAT. SEMICONDUCTOR	LM78L05ACZ
L2	23642/510	INDUCTOR-FIXED 0.1uH +/- 5% EPOXY-MOULD, 450mA 0R44 MAX, 28 Q @ 100 MHz, 700 MHz SRF, SURFACE	MEGGITT ELECTRONICS	3612-T-R10-J
L3	23642/533	INDUCTOR-FIXED 10uH +/- 5% EPOXY-MOULD, 150mA 2R1 MAX, 30 Q @ 2.52 MHz, 36 MHz SRF, SURFACE MOUNTED,	MEGGITT ELECTRONICS	3612-T-100-J
L4	23642/555	INDUCTOR-FIXED 10uH +/- 10% COATED-LACQUER, MINIATURE, 470mA 0R9 MAX, 45 Q @ 7.9 MHz, 45 MHz	MEGGITT ELECTRONICS	C11-406/8/27520/006
L5	23642/555	INDUCTOR-FIXED 10uH +/- 10% COATED-LACQUER, MINIATURE, 470mA 0R9 MAX, 45 Q @ 7.9 MHz, 45 MHz	MEGGITT ELECTRONICS	C11-406/8/27520/006
L6	23642/533	INDUCTOR-FIXED 10uH +/- 5% EPOXY-MOULD, 150mA 2R1 MAX, 30 Q @ 2.52 MHz, 36 MHz SRF, SURFACE MOUNTED,	MEGGITT ELECTRONICS	3612-T-100-J
L7	23642/555	INDUCTOR-FIXED 10uH +/- 10% COATED-LACQUER, MINIATURE, 470mA 0R9 MAX, 45 Q @ 7.9 MHz, 45 MHz	MEGGITT ELECTRONICS	C11-406/8/27520/006
L8	23642/533	INDUCTOR-FIXED 10uH +/- 5% EPOXY-MOULD, 150mA 2R1 MAX, 30 Q @ 2.52 MHz, 36 MHz SRF, SURFACE MOUNTED,	MEGGITT ELECTRONICS	3612-T-100-J
L9	23642/555	INDUCTOR-FIXED 10uH +/- 10% COATED-LACQUER, MINIATURE, 470mA 0R9 MAX, 45 Q @ 7.9 MHz, 45 MHz	MEGGITT ELECTRONICS	C11-406/8/27520/006
L11	23642/716	INDUCTOR-FIXED 3.3uH +/- 5% EPOXY-MOULD, 260mA 1R2 MAX, 30 Q @ 7.96 MHz, 60 MHz SRF, SURFACE MOUNTED,	MEGGITT ELECTRONICS	3612-T-3R3-J
L12	23642/533	INDUCTOR-FIXED 10uH +/- 5% EPOXY-MOULD, 150mA 2R1 MAX, 30 Q @ 2.52 MHz, 36 MHz SRF, SURFACE MOUNTED,	MEGGITT ELECTRONICS	3612-T-100-J
L13	23642/533	INDUCTOR-FIXED 10uH +/- 5% EPOXY-MOULD, 150mA 2R1 MAX, 30 Q @ 2.52 MHz, 36 MHz SRF, SURFACE MOUNTED,	MEGGITT ELECTRONICS	3612-T-100-J
L15	23642/706	INDUCTOR-FIXED 15uH +/- 5% EPOXY-MOULD, 130mA 2R8 MAX, 30 Q @ 2.52 MHz, 30 MHz SRF, SURFACE MOUNTED,	MEGGITT ELECTRONICS	3612-T-150-J
L16	23642/707	INDUCTOR-FIXED 100uH +/- 5% EPOXY-MOULD, 40mA 10R MAX, 20 Q @ 0.796 MHz, 10 MHz SRF, SURFACE	MEGGITT ELECTRONICS	3612-T-101-J
L17	23642/707	INDUCTOR-FIXED 100uH +/- 5% EPOXY-MOULD, 40mA 10R MAX, 20 Q @ 0.796 MHz, 10 MHz SRF, SURFACE	MEGGITT ELECTRONICS	3612-T-101-J
L20 to L26	23642/533	INDUCTOR-FIXED 10uH +/- 5% EPOXY-MOULD, 150mA 2R1 MAX, 30 Q @ 2.52 MHz, 36 MHz SRF, SURFACE MOUNTED,	MEGGITT ELECTRONICS	3612-T-100-J
L27	23642/537	INDUCTOR-FIXED 4.7uH +/- 5% EPOXY-MOULD, 220mA 1R5 MAX, 30 Q @ 7.96 MHz, 50 MHz SRF, SURFACE MOUNTED,	MEGGITT ELECTRONICS	3612-T-4R7-J
L28	23642/064	INDUCTOR-FIXED 1mH +/- 10% UNSCREENED, AIR-CORED, 510mA 1R176 MAX, 20 Q @ 0.796 MHz, 13mm HIGH MAX,	TOKO (UK) LTD	494HYF0140K
L29	23642/064	INDUCTOR-FIXED 1mH +/- 10% UNSCREENED, AIR-CORED, 510mA 1R176 MAX, 20 Q @ 0.796 MHz, 13mm HIGH MAX,	TOKO (UK) LTD	494HYF0140K

10.7 MHz IF amplifier and Log. amplifier A4/1 (contd.)

Cir. Ref.	MI part number	Description	Manufacturer	Manufacturer's part number
R1	24811/165	RESISTOR-FIXED METAL-FILM 475R +/- 1% 250mW 200V 50 ppm/DEG.C, SURFACE MOUNTED, SIZE MINI-MELF,	VISHAY COMPONENTS	SMM0204-475R-1%50ppm
R2	24811/150	RESISTOR-FIXED METAL-FILM 110R +/- 1% 250mW 200V 50 ppm/DEG.C, SURFACE MOUNTED, SIZE MINI-MELF,	VISHAY COMPONENTS	SMM0204-110R-1%50ppm
R3	24811/127	RESISTOR-FIXED METAL-FILM 12R1 +/- 1% 250mW 200V 50 ppm/DEG.C, SURFACE MOUNTED, SIZE MINI-MELF,	VISHAY COMPONENTS	SMM0204-12R1-1%50ppm
R4	25748/564	RESISTOR-VARIABLE CERMET LINEAR, 500R 10% 500mW 200V 100 ppm/DEG.C, MULTI-TURN, VERTICAL-PCB,	MEGGITT ELECTRONICS	4290W404/8/06411/501
R5	24811/171	RESISTOR-FIXED METAL-FILM 825R +/- 1% 250mW 200V 50 ppm/DEG.C, SURFACE MOUNTED, SIZE MINI-MELF,	VISHAY COMPONENTS	SMM0204-825R-1%50ppm
R7	24811/159	RESISTOR-FIXED METAL-FILM 274R +/- 1% 250mW 200V 50 ppm/DEG.C, SURFACE MOUNTED, SIZE MINI-MELF,	VISHAY COMPONENTS	SMM0204-274R-1%50ppm
R12	24811/213	RESISTOR-FIXED METAL-FILM 47K5 +/- 1% 250mW 200V 50 ppm/DEG.C, SURFACE MOUNTED, SIZE MINI-MELF,	VISHAY COMPONENTS	SMM0204-47K5-1%50ppm
R17	24811/161	RESISTOR-FIXED METAL-FILM 332R +/- 1% 250mW 200V 50 ppm/DEG.C, SURFACE MOUNTED, SIZE MINI-MELF,	VISHAY COMPONENTS	SMM0204-332R-1%50ppm
R18	24811/142	RESISTOR-FIXED METAL-FILM 51R1 +/- 1% 250mW 200V 50 ppm/DEG.C, SURFACE MOUNTED, SIZE MINI-MELF,	VISHAY COMPONENTS	SMM0204-51R1-1%50ppm
R20	24811/159	RESISTOR-FIXED METAL-FILM 274R +/- 1% 250mW 200V 50 ppm/DEG.C, SURFACE MOUNTED, SIZE MINI-MELF,	VISHAY COMPONENTS	SMM0204-274R-1%50ppm
R21	24811/170	RESISTOR-FIXED METAL-FILM 750R +/- 1% 250mW 200V 50 ppm/DEG.C, SURFACE MOUNTED, SIZE MINI-MELF,	VISHAY COMPONENTS	SMM0204-750R-1%50ppm
R22	24811/138	RESISTOR-FIXED METAL-FILM 36R5 +/- 1% 250mW 200V 50 ppm/DEG.C, SURFACE MOUNTED, SIZE MINI-MELF,	VISHAY COMPONENTS	SMM0204-36R5-1%50ppm
R23	24811/180	RESISTOR-FIXED METAL-FILM 2K +/- 1% 250mW 200V 50 ppm/DEG.C, SURFACE MOUNTED, SIZE MINI-MELF, (8mm	VISHAY COMPONENTS	SMM0204-2K0-1%50ppm
R24	24811/147	RESISTOR-FIXED METAL-FILM 82R5 +/- 1% 250mW 200V 50 ppm/DEG.C, SURFACE MOUNTED, SIZE MINI-MELF,	VISHAY COMPONENTS	SMM0204-82R5-1%50ppm
R25	24811/159	RESISTOR-FIXED METAL-FILM 274R +/- 1% 250mW 200V 50 ppm/DEG.C, SURFACE MOUNTED, SIZE MINI-MELF,	VISHAY COMPONENTS	SMM0204-274R-1%50ppm
R26	24811/171	RESISTOR-FIXED METAL-FILM 825R +/- 1% 250mW 200V 50 ppm/DEG.C, SURFACE MOUNTED, SIZE MINI-MELF,	VISHAY COMPONENTS	SMM0204-825R-1%50ppm
R27	24811/156	RESISTOR-FIXED METAL-FILM 200R +/- 1% 250mW 200V 50 ppm/DEG.C, SURFACE MOUNTED, SIZE MINI-MELF,	VISHAY COMPONENTS	SMM0204-200R-1%50ppm
R29	24811/158	RESISTOR-FIXED METAL-FILM 243R +/- 1% 250mW 200V 50 ppm/DEG.C, SURFACE MOUNTED, SIZE MINI-MELF,	VISHAY COMPONENTS	SMM0204-243R-1%50ppm
R30	24811/175	RESISTOR-FIXED METAL-FILM 1K21 +/- 1% 250mW 200V 50 ppm/DEG.C, SURFACE MOUNTED, SIZE MINI-MELF,	VISHAY COMPONENTS	SMM0204-1K21-1%50ppm
R31	25748/569	RESISTOR-VARIABLE CERMET LINEAR, 1K 10% 500mW 200V 100 ppm/DEG.C, MULTI-TURN, VERTICAL-PCB, 0.375in	MEGGITT ELECTRONICS	4290W404/8/06411/102
R32	24811/225	RESISTOR-FIXED METAL-FILM 150K +/- 1% 250mW 200V 50 ppm/DEG.C, SURFACE MOUNTED, SIZE MINI-MELF,	VISHAY COMPONENTS	SMM0204-150K-1%50ppm
R33	24811/177	RESISTOR-FIXED METAL-FILM 1K5 +/- 1% 250mW 200V 50 ppm/DEG.C, SURFACE MOUNTED, SIZE MINI-MELF, (8mm	VISHAY COMPONENTS	SMM0204-1K5-1%50ppm
R34	24811/150	RESISTOR-FIXED METAL-FILM 110R +/- 1% 250mW 200V 50 ppm/DEG.C, SURFACE MOUNTED, SIZE MINI-MELF,	VISHAY COMPONENTS	SMM0204-110R-1%50ppm
R35	24811/147	RESISTOR-FIXED METAL-FILM 82R5 +/- 1% 250mW 200V 50 ppm/DEG.C, SURFACE MOUNTED, SIZE MINI-MELF,	VISHAY COMPONENTS	SMM0204-82R5-1%50ppm
R36	24811/159	RESISTOR-FIXED METAL-FILM 274R +/- 1% 250mW 200V 50 ppm/DEG.C, SURFACE MOUNTED, SIZE MINI-MELF,	VISHAY COMPONENTS	SMM0204-274R-1%50ppm
R37	24811/171	RESISTOR-FIXED METAL-FILM 825R +/- 1% 250mW 200V 50 ppm/DEG.C, SURFACE MOUNTED, SIZE MINI-MELF,	VISHAY COMPONENTS	SMM0204-825R-1%50ppm

Cir. Ref.	MI part number	Description	Manufacturer	Manufacturer's part number
10.7 MHz IF amplifier and Log. amplifier A4/1 (contd.)				
R38	24811/156	RESISTOR-FIXED METAL-FILM 200R +/- 1% 250mW 200V 50 ppm/DEG.C, SURFACE MOUNTED, SIZE MINI-MELF,	VISHAY COMPONENTS	SMM0204-200R-1%50ppm
R39	24811/127	RESISTOR-FIXED METAL-FILM 12R1 +/- 1% 250mW 200V 50 ppm/DEG.C, SURFACE MOUNTED, SIZE MINI-MELF,	VISHAY COMPONENTS	SMM0204-12R1-1%50ppm
R40	24811/158	RESISTOR-FIXED METAL-FILM 243R +/- 1% 250mW 200V 50 ppm/DEG.C, SURFACE MOUNTED, SIZE MINI-MELF,	VISHAY COMPONENTS	SMM0204-243R-1%50ppm
R41	24811/175	RESISTOR-FIXED METAL-FILM 1K21 +/- 1% 250mW 200V 50 ppm/DEG.C, SURFACE MOUNTED, SIZE MINI-MELF,	VISHAY COMPONENTS	SMM0204-1K21-1%50ppm
R42	25748/569	RESISTOR-VARIABLE CERMET LINEAR, 1K 10% 500mW 200V 100 ppm/DEG.C, MULTI-TURN, VERTICAL-PCB, 0.375in	MEGGITT ELECTRONICS	4290W404/8/06411/102
R43	24811/225	RESISTOR-FIXED METAL-FILM 150K +/- 1% 250mW 200V 50 ppm/DEG.C, SURFACE MOUNTED, SIZE MINI-MELF,	VISHAY COMPONENTS	SMM0204-150K-1%50ppm
R44	24811/177	RESISTOR-FIXED METAL-FILM 1K5 +/- 1% 250mW 200V 50 ppm/DEG.C, SURFACE MOUNTED, SIZE MINI-MELF, (8mm	VISHAY COMPONENTS	SMM0204-1K5-1%50ppm
R45	24811/150	RESISTOR-FIXED METAL-FILM 110R +/- 1% 250mW 200V 50 ppm/DEG.C, SURFACE MOUNTED, SIZE MINI-MELF,	VISHAY COMPONENTS	SMM0204-110R-1%50ppm
R46	24811/142	RESISTOR-FIXED METAL-FILM 51R1 +/- 1% 250mW 200V 50 ppm/DEG.C, SURFACE MOUNTED, SIZE MINI-MELF,	VISHAY COMPONENTS	SMM0204-51R1-1%50ppm
R47	24811/159	RESISTOR-FIXED METAL-FILM 274R +/- 1% 250mW 200V 50 ppm/DEG.C, SURFACE MOUNTED, SIZE MINI-MELF,	VISHAY COMPONENTS	SMM0204-274R-1%50ppm
R48	24811/171	RESISTOR-FIXED METAL-FILM 825R +/- 1% 250mW 200V 50 ppm/DEG.C, SURFACE MOUNTED, SIZE MINI-MELF,	VISHAY COMPONENTS	SMM0204-825R-1%50ppm
R49	24811/142	RESISTOR-FIXED METAL-FILM 51R1 +/- 1% 250mW 200V 50 ppm/DEG.C, SURFACE MOUNTED, SIZE MINI-MELF,	VISHAY COMPONENTS	SMM0204-51R1-1%50ppm
R50	24811/127	RESISTOR-FIXED METAL-FILM 12R1 +/- 1% 250mW 200V 50 ppm/DEG.C, SURFACE MOUNTED, SIZE MINI-MELF,	VISHAY COMPONENTS	SMM0204-12R1-1%50ppm
R51	24811/161	RESISTOR-FIXED METAL-FILM 332R +/- 1% 250mW 200V 50 ppm/DEG.C, SURFACE MOUNTED, SIZE MINI-MELF,	VISHAY COMPONENTS	SMM0204-332R-1%50ppm
R52	24811/171	RESISTOR-FIXED METAL-FILM 825R +/- 1% 250mW 200V 50 ppm/DEG.C, SURFACE MOUNTED, SIZE MINI-MELF,	VISHAY COMPONENTS	SMM0204-825R-1%50ppm
R53	24811/157	RESISTOR-FIXED METAL-FILM 221R +/- 1% 250mW 200V 50 ppm/DEG.C, SURFACE MOUNTED, SIZE MINI-MELF,	VISHAY COMPONENTS	SMM0204-221R-1%50ppm
R54	24811/180	RESISTOR-FIXED METAL-FILM 2K +/- 1% 250mW 200V 50 ppm/DEG.C, SURFACE MOUNTED, SIZE MINI-MELF, (8mm	VISHAY COMPONENTS	SMM0204-2K0-1%50ppm
R55	24811/153	RESISTOR-FIXED METAL-FILM 150R +/- 1% 250mW 200V 50 ppm/DEG.C, SURFACE MOUNTED, SIZE MINI-MELF,	VISHAY COMPONENTS	SMM0204-150R-1%50ppm
R56	24811/180	RESISTOR-FIXED METAL-FILM 2K +/- 1% 250mW 200V 50 ppm/DEG.C, SURFACE MOUNTED, SIZE MINI-MELF, (8mm	VISHAY COMPONENTS	SMM0204-2K0-1%50ppm
R57	24811/147	RESISTOR-FIXED METAL-FILM 82R5 +/- 1% 250mW 200V 50 ppm/DEG.C, SURFACE MOUNTED, SIZE MINI-MELF,	VISHAY COMPONENTS	SMM0204-82R5-1%50ppm
R58	24811/160	RESISTOR-FIXED METAL-FILM 301R +/- 1% 250mW 200V 50 ppm/DEG.C, SURFACE MOUNTED, SIZE MINI-MELF,	VISHAY COMPONENTS	SMM0204-301R-1%50ppm
R59	24811/168	RESISTOR-FIXED METAL-FILM 619R +/- 1% 250mW 200V 50 ppm/DEG.C, SURFACE MOUNTED, SIZE MINI-MELF,	VISHAY COMPONENTS	SMM0204-619R-1%50ppm
R60	24811/156	RESISTOR-FIXED METAL-FILM 200R +/- 1% 250mW 200V 50 ppm/DEG.C, SURFACE MOUNTED, SIZE MINI-MELF,	VISHAY COMPONENTS	SMM0204-200R-1%50ppm
R61	24811/127	RESISTOR-FIXED METAL-FILM 12R1 +/- 1% 250mW 200V 50 ppm/DEG.C, SURFACE MOUNTED, SIZE MINI-MELF,	VISHAY COMPONENTS	SMM0204-12R1-1%50ppm
R62	24811/158	RESISTOR-FIXED METAL-FILM 243R +/- 1% 250mW 200V 50 ppm/DEG.C, SURFACE MOUNTED, SIZE MINI-MELF,	VISHAY COMPONENTS	SMM0204-243R-1%50ppm
R63	24811/175	RESISTOR-FIXED METAL-FILM 1K21 +/- 1% 250mW 200V 50 ppm/DEG.C, SURFACE MOUNTED, SIZE MINI-MELF,	VISHAY COMPONENTS	SMM0204-1K21-1%50ppm

10.7 MHz IF amplifier and Log. amplifier A4/1 (contd.)

Cir. Ref.	MI part number	Description	Manufacturer	Manufacturer's part number
R64	25748/569	RESISTOR-VARIABLE CERMET LINEAR, 1K 10% 500mW 200V 100 ppm/DEG.C, MULTI-TURN, VERTICAL-PCB, 0.375in	MEGGITT ELECTRONICS	4290W404/8/06411/102
R65	24811/225	RESISTOR-FIXED METAL-FILM 150K +/- 1% 250mW 200V 50 ppm/DEG.C, SURFACE MOUNTED, SIZE MINI-MELF,	VISHAY COMPONENTS	SMM0204-150K-1%50ppm
R66	24811/177	RESISTOR-FIXED METAL-FILM 1K5 +/- 1% 250mW 200V 50 ppm/DEG.C, SURFACE MOUNTED, SIZE MINI-MELF, (8mm	VISHAY COMPONENTS	SMM0204-1K5-1%50ppm
R67	24811/150	RESISTOR-FIXED METAL-FILM 110R +/- 1% 250mW 200V 50 ppm/DEG.C, SURFACE MOUNTED, SIZE MINI-MELF,	VISHAY COMPONENTS	SMM0204-110R-1%50ppm
R68	24811/147	RESISTOR-FIXED METAL-FILM 82R5 +/- 1% 250mW 200V 50 ppm/DEG.C, SURFACE MOUNTED, SIZE MINI-MELF,	VISHAY COMPONENTS	SMM0204-82R5-1%50ppm
R69	24811/159	RESISTOR-FIXED METAL-FILM 274R +/- 1% 250mW 200V 50 ppm/DEG.C, SURFACE MOUNTED, SIZE MINI-MELF,	VISHAY COMPONENTS	SMM0204-274R-1%50ppm
R70	24811/171	RESISTOR-FIXED METAL-FILM 825R +/- 1% 250mW 200V 50 ppm/DEG.C, SURFACE MOUNTED, SIZE MINI-MELF,	VISHAY COMPONENTS	SMM0204-825R-1%50ppm
R71	24811/156	RESISTOR-FIXED METAL-FILM 200R +/- 1% 250mW 200V 50 ppm/DEG.C, SURFACE MOUNTED, SIZE MINI-MELF,	VISHAY COMPONENTS	SMM0204-200R-1%50ppm
R72	24811/127	RESISTOR-FIXED METAL-FILM 12R1 +/- 1% 250mW 200V 50 ppm/DEG.C, SURFACE MOUNTED, SIZE MINI-MELF,	VISHAY COMPONENTS	SMM0204-12R1-1%50ppm
R73	24811/158	RESISTOR-FIXED METAL-FILM 243R +/- 1% 250mW 200V 50 ppm/DEG.C, SURFACE MOUNTED, SIZE MINI-MELF,	VISHAY COMPONENTS	SMM0204-243R-1%50ppm
R74	24811/175	RESISTOR-FIXED METAL-FILM 1K21 +/- 1% 250mW 200V 50 ppm/DEG.C, SURFACE MOUNTED, SIZE MINI-MELF,	VISHAY COMPONENTS	SMM0204-1K21-1%50ppm
R75	25748/569	RESISTOR-VARIABLE CERMET LINEAR, 1K 10% 500mW 200V 100 ppm/DEG.C, MULTI-TURN, VERTICAL-PCB, 0.375in	MEGGITT ELECTRONICS	4290W404/8/06411/102
R76	24811/225	RESISTOR-FIXED METAL-FILM 150K +/- 1% 250mW 200V 50 ppm/DEG.C, SURFACE MOUNTED, SIZE MINI-MELF,	VISHAY COMPONENTS	SMM0204-150K-1%50ppm
R77	24811/177	RESISTOR-FIXED METAL-FILM 1K5 +/- 1% 250mW 200V 50 ppm/DEG.C, SURFACE MOUNTED, SIZE MINI-MELF, (8mm	VISHAY COMPONENTS	SMM0204-1K5-1%50ppm
R78	24811/150	RESISTOR-FIXED METAL-FILM 110R +/- 1% 250mW 200V 50 ppm/DEG.C, SURFACE MOUNTED, SIZE MINI-MELF,	VISHAY COMPONENTS	SMM0204-110R-1%50ppm
R79	24811/142	RESISTOR-FIXED METAL-FILM 51R1 +/- 1% 250mW 200V 50 ppm/DEG.C, SURFACE MOUNTED, SIZE MINI-MELF,	VISHAY COMPONENTS	SMM0204-51R1-1%50ppm
R81	24811/175	RESISTOR-FIXED METAL-FILM 1K21 +/- 1% 250mW 200V 50 ppm/DEG.C, SURFACE MOUNTED, SIZE MINI-MELF,	VISHAY COMPONENTS	SMM0204-1K21-1%50ppm
R82	24811/159	RESISTOR-FIXED METAL-FILM 274R +/- 1% 250mW 200V 50 ppm/DEG.C, SURFACE MOUNTED, SIZE MINI-MELF,	VISHAY COMPONENTS	SMM0204-274R-1%50ppm
R88 to R97	24811/197	RESISTOR-FIXED METAL-FILM 10K +/- 1% 250mW 200V 50 ppm/DEG.C, SURFACE MOUNTED, SIZE MINI-MELF, (8mm	VISHAY COMPONENTS	SMM0204-10K-1%50ppm
R99	24811/177	RESISTOR-FIXED METAL-FILM 1K5 +/- 1% 250mW 200V 50 ppm/DEG.C, SURFACE MOUNTED, SIZE MINI-MELF, (8mm	VISHAY COMPONENTS	SMM0204-1K5-1%50ppm
R100	24811/211	RESISTOR-FIXED METAL-FILM 39K2 +/- 1% 250mW 200V 50 ppm/DEG.C, SURFACE MOUNTED, SIZE MINI-MELF,	VISHAY COMPONENTS	SMM0204-39K2-1%50ppm
R101	24811/201	RESISTOR-FIXED METAL-FILM 15K +/- 1% 250mW 200V 50 ppm/DEG.C, SURFACE MOUNTED, SIZE MINI-MELF, (8mm	VISHAY COMPONENTS	SMM0204-15K-1%50ppm
R103	24811/197	RESISTOR-FIXED METAL-FILM 10K +/- 1% 250mW 200V 50 ppm/DEG.C, SURFACE MOUNTED, SIZE MINI-MELF, (8mm	VISHAY COMPONENTS	SMM0204-10K-1%50ppm
R104	24811/179	RESISTOR-FIXED METAL-FILM 1K82 +/- 1% 250mW 200V 50 ppm/DEG.C, SURFACE MOUNTED, SIZE MINI-MELF,	VISHAY COMPONENTS	SMM0204-1K82-1%50ppm
R105	24811/185	RESISTOR-FIXED METAL-FILM 3K32 +/- 1% 250mW 200V 50 ppm/DEG.C, SURFACE MOUNTED, SIZE MINI-MELF,	VISHAY COMPONENTS	SMM0204-3K32-1%50ppm
R106	24811/179	RESISTOR-FIXED METAL-FILM 1K82 +/- 1% 250mW 200V 50 ppm/DEG.C, SURFACE MOUNTED, SIZE MINI-MELF,	VISHAY COMPONENTS	SMM0204-1K82-1%50ppm

10.7 MHz IF amplifier and Log. amplifier A4/1 (contd.)

Cir. Ref.	MI part number	Description	Manufacturer	Manufacturer's part number
R110	24811/161	RESISTOR-FIXED METAL-FILM 332R +/- 1% 250mW 200V 50 ppm/DEG.C, SURFACE MOUNTED, SIZE MINI-MELF,	VISHAY COMPONENTS	SMM0204-332R-1%50ppm
R111	24811/159	RESISTOR-FIXED METAL-FILM 274R +/- 1% 250mW 200V 50 ppm/DEG.C, SURFACE MOUNTED, SIZE MINI-MELF,	VISHAY COMPONENTS	SMM0204-274R-1%50ppm
R112	24811/171	RESISTOR-FIXED METAL-FILM 825R +/- 1% 250mW 200V 50 ppm/DEG.C, SURFACE MOUNTED, SIZE MINI-MELF,	VISHAY COMPONENTS	SMM0204-825R-1%50ppm
R113	24811/165	RESISTOR-FIXED METAL-FILM 475R +/- 1% 250mW 200V 50 ppm/DEG.C, SURFACE MOUNTED, SIZE MINI-MELF,	VISHAY COMPONENTS	SMM0204-475R-1%50ppm
R116	24811/156	RESISTOR-FIXED METAL-FILM 200R +/- 1% 250mW 200V 50 ppm/DEG.C, SURFACE MOUNTED, SIZE MINI-MELF,	VISHAY COMPONENTS	SMM0204-200R-1%50ppm
R117	24811/223	RESISTOR-FIXED METAL-FILM 121K +/- 1% 250mW 200V 50 ppm/DEG.C, SURFACE MOUNTED, SIZE MINI-MELF,	VISHAY COMPONENTS	SMM0204-121K-1%50ppm
R118	24811/220	RESISTOR-FIXED METAL-FILM 90K9 +/- 1% 250mW 200V 50 ppm/DEG.C, SURFACE MOUNTED, SIZE MINI-MELF,	VISHAY COMPONENTS	SMM0204-90K9-1%50ppm
R119	25748/565	RESISTOR-VARIABLE CERMET LINEAR, 20K 10% 500mW 200V 100 ppm/DEG.C, MULTI-TURN, VERTICAL-PCB,	MEGGITT ELECTRONICS	4290W404/8/06411/203
R120	24811/220	RESISTOR-FIXED METAL-FILM 90K9 +/- 1% 250mW 200V 50 ppm/DEG.C, SURFACE MOUNTED, SIZE MINI-MELF,	VISHAY COMPONENTS	SMM0204-90K9-1%50ppm
R121	24811/223	RESISTOR-FIXED METAL-FILM 121K +/- 1% 250mW 200V 50 ppm/DEG.C, SURFACE MOUNTED, SIZE MINI-MELF,	VISHAY COMPONENTS	SMM0204-121K-1%50ppm
R122	25748/568	RESISTOR-VARIABLE CERMET LINEAR, 500K 10% 500mW 200V 100 ppm/DEG.C, MULTI-TURN, VERTICAL-PCB,	MEGGITT ELECTRONICS	4290W404/8/06411/504
R124	24811/153	RESISTOR-FIXED METAL-FILM 150R +/- 1% 250mW 200V 50 ppm/DEG.C, SURFACE MOUNTED, SIZE MINI-MELF,	VISHAY COMPONENTS	SMM0204-150R-1%50ppm
R125	24811/174	RESISTOR-FIXED METAL-FILM 1K1 +/- 1% 250mW 200V 50 ppm/DEG.C, SURFACE MOUNTED, SIZE MINI-MELF, (8mm	VISHAY COMPONENTS	SMM0204-1K1-1%50ppm
R126	24811/174	RESISTOR-FIXED METAL-FILM 1K1 +/- 1% 250mW 200V 50 ppm/DEG.C, SURFACE MOUNTED, SIZE MINI-MELF, (8mm	VISHAY COMPONENTS	SMM0204-1K1-1%50ppm
R127	24811/216	RESISTOR-FIXED METAL-FILM 61K9 +/- 1% 250mW 200V 50 ppm/DEG.C, SURFACE MOUNTED, SIZE MINI-MELF,	VISHAY COMPONENTS	SMM0204-61K9-1%50ppm
R128	24811/216	RESISTOR-FIXED METAL-FILM 61K9 +/- 1% 250mW 200V 50 ppm/DEG.C, SURFACE MOUNTED, SIZE MINI-MELF,	VISHAY COMPONENTS	SMM0204-61K9-1%50ppm
R130	24811/245	RESISTOR-FIXED METAL-FILM 1M +/- 1% 250mW 200V 50 ppm/DEG.C, SURFACE MOUNTED, SIZE MINI-MELF, (8mm	VISHAY COMPONENTS	SMM0204-1M0-1%50ppm
R131	24811/204	RESISTOR-FIXED METAL-FILM 20K +/- 1% 250mW 200V 50 ppm/DEG.C, SURFACE MOUNTED, SIZE MINI-MELF, (8mm	VISHAY COMPONENTS	SMM0204-20K-1%50ppm
R132	24811/245	RESISTOR-FIXED METAL-FILM 1M +/- 1% 250mW 200V 50 ppm/DEG.C, SURFACE MOUNTED, SIZE MINI-MELF, (8mm	VISHAY COMPONENTS	SMM0204-1M0-1%50ppm
R133	24811/204	RESISTOR-FIXED METAL-FILM 20K +/- 1% 250mW 200V 50 ppm/DEG.C, SURFACE MOUNTED, SIZE MINI-MELF, (8mm	VISHAY COMPONENTS	SMM0204-20K-1%50ppm
R134	24811/245	RESISTOR-FIXED METAL-FILM 1M +/- 1% 250mW 200V 50 ppm/DEG.C, SURFACE MOUNTED, SIZE MINI-MELF, (8mm	VISHAY COMPONENTS	SMM0204-1M0-1%50ppm
R135	24811/204	RESISTOR-FIXED METAL-FILM 20K +/- 1% 250mW 200V 50 ppm/DEG.C, SURFACE MOUNTED, SIZE MINI-MELF, (8mm	VISHAY COMPONENTS	SMM0204-20K-1%50ppm
R136	24811/180	RESISTOR-FIXED METAL-FILM 2K +/- 1% 250mW 200V 50 ppm/DEG.C, SURFACE MOUNTED, SIZE MINI-MELF, (8mm	VISHAY COMPONENTS	SMM0204-2K0-1%50ppm
R137	24811/142	RESISTOR-FIXED METAL-FILM 51R1 +/- 1% 250mW 200V 50 ppm/DEG.C, SURFACE MOUNTED, SIZE MINI-MELF,	VISHAY COMPONENTS	SMM0204-51R1-1%50ppm
R139	24811/167	RESISTOR-FIXED METAL-FILM 562R +/- 1% 250mW 200V 50 ppm/DEG.C, SURFACE MOUNTED, SIZE MINI-MELF,	VISHAY COMPONENTS	SMM0204-562R-1%50ppm
R140	24811/142	RESISTOR-FIXED METAL-FILM 51R1 +/- 1% 250mW 200V 50 ppm/DEG.C, SURFACE MOUNTED, SIZE MINI-MELF,	VISHAY COMPONENTS	SMM0204-51R1-1%50ppm

Cir. Ref.	MI part number	Description	Manufacturer	Manufacturer's part number
10.7 MHz IF amplifier and Log. amplifier A4/1 (contd.)				
R141	24811/190	RESISTOR-FIXED METAL-FILM 5K11 +/- 1% 250mW 200V 50 ppm/DEG.C, SURFACE MOUNTED, SIZE MINI-MELF,	VISHAY COMPONENTS	SMM0204-5K11-1%50ppm
R142	24811/177	RESISTOR-FIXED METAL-FILM 1K5 +/- 1% 250mW 200V 50 ppm/DEG.C, SURFACE MOUNTED, SIZE MINI-MELF, (8mm	VISHAY COMPONENTS	SMM0204-1K5-1%50ppm
R143	24811/153	RESISTOR-FIXED METAL-FILM 150R +/- 1% 250mW 200V 50 ppm/DEG.C, SURFACE MOUNTED, SIZE MINI-MELF,	VISHAY COMPONENTS	SMM0204-150R-1%50ppm
R144	24811/197	RESISTOR-FIXED METAL-FILM 10K +/- 1% 250mW 200V 50 ppm/DEG.C, SURFACE MOUNTED, SIZE MINI-MELF, (8mm	VISHAY COMPONENTS	SMM0204-10K-1%50ppm
R145	24811/189	RESISTOR-FIXED METAL-FILM 4K75 +/- 1% 250mW 200V 50 ppm/DEG.C, SURFACE MOUNTED, SIZE MINI-MELF,	VISHAY COMPONENTS	SMM0204-4K75-1%50ppm
R146	24811/142	RESISTOR-FIXED METAL-FILM 51R1 +/- 1% 250mW 200V 50 ppm/DEG.C, SURFACE MOUNTED, SIZE MINI-MELF,	VISHAY COMPONENTS	SMM0204-51R1-1%50ppm
R147	24811/180	RESISTOR-FIXED METAL-FILM 2K +/- 1% 250mW 200V 50 ppm/DEG.C, SURFACE MOUNTED, SIZE MINI-MELF, (8mm	VISHAY COMPONENTS	SMM0204-2K0-1%50ppm
R148	24811/171	RESISTOR-FIXED METAL-FILM 825R +/- 1% 250mW 200V 50 ppm/DEG.C, SURFACE MOUNTED, SIZE MINI-MELF,	VISHAY COMPONENTS	SMM0204-825R-1%50ppm
R149	24811/142	RESISTOR-FIXED METAL-FILM 51R1 +/- 1% 250mW 200V 50 ppm/DEG.C, SURFACE MOUNTED, SIZE MINI-MELF,	VISHAY COMPONENTS	SMM0204-51R1-1%50ppm
R153	24811/208	RESISTOR-FIXED METAL-FILM 30K1 +/- 1% 250mW 200V 50 ppm/DEG.C, SURFACE MOUNTED, SIZE MINI-MELF,	VISHAY COMPONENTS	SMM0204-30K1-1%50ppm
R155	24811/170	RESISTOR-FIXED METAL-FILM 750R +/- 1% 250mW 200V 50 ppm/DEG.C, SURFACE MOUNTED, SIZE MINI-MELF,	VISHAY COMPONENTS	SMM0204-750R-1%50ppm
R158	24811/186	RESISTOR-FIXED METAL-FILM 3K65 +/- 1% 250mW 200V 50 ppm/DEG.C, SURFACE MOUNTED, SIZE MINI-MELF,	VISHAY COMPONENTS	SMM0204-3K65-1%50ppm
R160	24811/161	RESISTOR-FIXED METAL-FILM 332R +/- 1% 250mW 200V 50 ppm/DEG.C, SURFACE MOUNTED, SIZE MINI-MELF,	VISHAY COMPONENTS	SMM0204-332R-1%50ppm
TR4 to TR14	28457/851	TRANSISTOR NPN BIPOLAR BFS17... 15V 1.3GHz 250mW 50mA 20hFE MIN @ 2mA, MARKING CODE E1, SURFACE	PHILIPS	BFS17
TR15	28487/809	TRANSISTOR NPN BIPOLAR BFR93A... 12V 5GHz 250mW 35mA 40hFE MIN @ 30mA, MARKING CODE R2, SURFACE	PHILIPS	BFR93A
TR16 to TR20	28457/851	TRANSISTOR NPN BIPOLAR BFS17... 15V 1.3GHz 250mW 50mA 20hFE MIN @ 2mA, MARKING CODE E1, SURFACE	PHILIPS	BFS17
XL1	23642/944	FILTER HF, PCB-MOUNT, CERAMIC, RADIAL, 10.7MHz, 280kHz B/WIDTH @ -3dB, 650kHz B/WIDTH @ -20dB, 330	MURATA ELECTRONICS	SFE10.7MA5-A
XL2	23642/944	FILTER HF, PCB-MOUNT, CERAMIC, RADIAL, 10.7MHz, 280kHz B/WIDTH @ -3dB, 650kHz B/WIDTH @ -20dB, 330	MURATA ELECTRONICS	SFE10.7MA5-A
XL3	28312/125	CRYSTAL 10.7 MHz +/- 20 ppm, 30pF SERIES RESONANCE, 25mH - 16R ESR MAX, HC-43/U, WIRE	C-MAC CRYSTALS LTD	C5742
XL4	28312/125	CRYSTAL 10.7 MHz +/- 20 ppm, 30pF SERIES RESONANCE, 25mH - 16R ESR MAX, HC-43/U, WIRE	C-MAC CRYSTALS LTD	C5742
XL5	28312/125	CRYSTAL 10.7 MHz +/- 20 ppm, 30pF SERIES RESONANCE, 25mH - 16R ESR MAX, HC-43/U, WIRE	C-MAC CRYSTALS LTD	C5742
XL6	28312/125	CRYSTAL 10.7 MHz +/- 20 ppm, 30pF SERIES RESONANCE, 25mH - 16R ESR MAX, HC-43/U, WIRE	C-MAC CRYSTALS LTD	C5742

Clr. Ref.	MI part number	Description	Manufacturer	Manufacturer's part number

RF output amplifier and AM modulator A6/1

When ordering, prefix circuit reference with A6/1.

	44829-925	Complete unit	Issue 006	
C1	26386/777	CAPACITOR-FIXED CERAMIC 47nF +/-20% 63V X7R/2C1, MULTILAYER, SURFACE-MOUNTED, SIZE 1206, NICKEL	PHILIPS	1206-2R-473-K9-BBC
C2	26343/491	CAPACITOR-FIXED CERAMIC 2.2pF +/-0.25pF 63V NP0 SINGLELAYER, RADIAL, 2.5mm PWP, (TAPED).	VISHAY COMPONENTS	ROC-922-CAK-ACR-J
C3	26343/501	CAPACITOR-FIXED CERAMIC 1.5pF +/-0.5pF 63V P100 SINGLELAYER, RADIAL, 2.5mm PWP, (LOOSE).	VISHAY COMPONENTS	ROA-915-CAK-AWS-J
C4	26386/833	CAPACITOR-FIXED CERAMIC 560pF +/-5% 50V NP0 MULTILAYER, SURFACE-MOUNTED, SIZE 0805, NICKEL	VISHAY COMPONENTS	VJ0805-A-561J-XAT
C5	26386/871	CAPACITOR-FIXED CERAMIC 4.7nF +/-10% 50V X7R/2C1, MULTILAYER, SURFACE-MOUNTED, SIZE 0805, NICKEL	ROHM ELECTRONICS LTD	MCH21-5C-472-KP
C6	26386/869	CAPACITOR-FIXED CERAMIC 3.3nF +/-10% 50V X7R/2C1, MULTILAYER, SURFACE-MOUNTED, SIZE 0805, NICKEL	ROHM ELECTRONICS LTD	MCH21-5C-332-KP
C7	26386/899	CAPACITOR-FIXED CERAMIC 100nF +/-10% 50V X7R/2C1, MULTILAYER, SURFACE-MOUNTED, SIZE 1206, NICKEL	ROHM ELECTRONICS LTD	MCH31-5C-104-KP
C8	26386/777	CAPACITOR-FIXED CERAMIC 47nF +/-20% 63V X7R/2C1, MULTILAYER, SURFACE-MOUNTED, SIZE 1206, NICKEL	PHILIPS	1206-2R-473-K9-BBC
C9	26386/871	CAPACITOR-FIXED CERAMIC 4.7nF +/-10% 50V X7R/2C1, MULTILAYER, SURFACE-MOUNTED, SIZE 0805, NICKEL	ROHM ELECTRONICS LTD	MCH21-5C-472-KP
C10	26386/777	CAPACITOR-FIXED CERAMIC 47nF +/-20% 63V X7R/2C1, MULTILAYER, SURFACE-MOUNTED, SIZE 1206, NICKEL	PHILIPS	1206-2R-473-K9-BBC
C14	26386/814	CAPACITOR-FIXED CERAMIC 15pF +/-5% 50V NP0 MULTILAYER, SURFACE-MOUNTED, SIZE 0805, NICKEL	ROHM ELECTRONICS LTD	MCH21-5A-150-JP
C15 to C25	26386/777	CAPACITOR-FIXED CERAMIC 47nF +/-20% 63V X7R/2C1, MULTILAYER, SURFACE-MOUNTED, SIZE 1206, NICKEL	PHILIPS	1206-2R-473-K9-BBC
C26	26386/759	CAPACITOR-FIXED CERAMIC 22nF +/-20% 50V X7R/2C1, MULTILAYER, SURFACE-MOUNTED, SIZE 1206, NICKEL	PHILIPS	1206-2R-223-K9-BBC
C28	26451/012	CAPACITOR-FIXED ALUMINIUM 100uF +/-20% 16V ELECTROLYTIC, SURFACE-MOUNTED, SIZE 8.3 x 8.3mm,	PANASONIC INDUSTRIAL	ECE-V-1CA-101P
C29	26451/012	CAPACITOR-FIXED ALUMINIUM 100uF +/-20% 16V ELECTROLYTIC, SURFACE-MOUNTED, SIZE 8.3 x 8.3mm,	PANASONIC INDUSTRIAL	ECE-V-1CA-101P
C30	26386/815	CAPACITOR-FIXED CERAMIC 18pF +/-5% 50V NP0 MULTILAYER, SURFACE-MOUNTED, SIZE 0805, NICKEL	ROHM ELECTRONICS LTD	MCH21-5A-180-JP
C31	26386/866	CAPACITOR-FIXED CERAMIC 1.8nF +/-10% 50V X7R/2C1, MULTILAYER, SURFACE-MOUNTED, SIZE 0805, NICKEL	ROHM ELECTRONICS LTD	MCH21-5C-182-KP
C32	26386/777	CAPACITOR-FIXED CERAMIC 47nF +/-20% 63V X7R/2C1, MULTILAYER, SURFACE-MOUNTED, SIZE 1206, NICKEL	PHILIPS	1206-2R-473-K9-BBC
C33	26386/826	CAPACITOR-FIXED CERAMIC 150pF +/-5% 50V NP0 MULTILAYER, SURFACE-MOUNTED, SIZE 0805, NICKEL	ROHM ELECTRONICS LTD	MCH21-5A-151-JP
C34	26386/824	CAPACITOR-FIXED CERAMIC 100pF +/-5% 50V NP0 MULTILAYER, SURFACE-MOUNTED, SIZE 0805, NICKEL	ROHM ELECTRONICS LTD	MCH21-5A-101-JP
C35	26386/829	CAPACITOR-FIXED CERAMIC 270pF +/-5% 50V NP0 MULTILAYER, SURFACE-MOUNTED, SIZE 0805, NICKEL	ROHM ELECTRONICS LTD	MCH21-5A-271-JP
C37	26386/759	CAPACITOR-FIXED CERAMIC 22nF +/-20% 50V X7R/2C1, MULTILAYER, SURFACE-MOUNTED, SIZE 1206, NICKEL	PHILIPS	1206-2R-223-K9-BBC
C38	26386/777	CAPACITOR-FIXED CERAMIC 47nF +/-20% 63V X7R/2C1, MULTILAYER, SURFACE-MOUNTED, SIZE 1206, NICKEL	PHILIPS	1206-2R-473-K9-BBC

RF output amplifier and AM modulator A6/1 (contd.)

Cir. Ref.	MI part number	Description	Manufacturer	Manufacturer's part number
C39	26386/777	CAPACITOR-FIXED CERAMIC 47nF +/-20% 63V X7R/2C1, MULTILAYER, SURFACE-MOUNTED, SIZE 1206, NICKEL	PHILIPS	1206-2R-473-K9-BBC
C44	26386/863	CAPACITOR-FIXED CERAMIC 1nF +/-10% 50V X7R/2C1, MULTILAYER, SURFACE-MOUNTED, SIZE 0805, NICKEL	ROHM ELECTRONICS LTD	MCH21-5C-102-KP
C45 to C48	26386/875	CAPACITOR-FIXED CERAMIC 10nF +/-10% 50V X7R/2C1, MULTILAYER, SURFACE-MOUNTED, SIZE 0805, NICKEL	ROHM ELECTRONICS LTD	MCH21-5C-103-KP
D1 to D4	28383/932	DIODE PIN, HSMP-3810... 250mW 100V 1A 0.35pF Rs 4R0 MAX @ 100mA, MARKING CODE E0, LOW PROFILE,	HEWLETT-PACKARD	HSMP-3810-L31
D5	28383/903	DIODE SMALL-SIGNAL, BAV99... DUAL, 70V 100mA 1.1Vf @ 50mA, IN SERIES, MARKING CODE A7, SURFACE	PHILIPS	BAV99 (A7)
D6	28371/412	DIODE ZENER, BZX84-C5V1... 250mW 5.1V 5% 250mA MARKING CODE Z2, SURFACE MOUNTED, SOT-23, (8mm	PHILIPS	BZX84-C5V1
D7	28371/412	DIODE ZENER, BZX84-C5V1... 250mW 5.1V 5% 250mA MARKING CODE Z2, SURFACE MOUNTED, SOT-23, (8mm	PHILIPS	BZX84-C5V1
D8	28349/011	DIODE SMALL-SIGNAL, SCHOTTKY, 5082-2826... 250mW 15V 1.2pF 1Vf @ 20mA, BATCH MATCHED TO WITHIN 10mV	HEWLETT-PACKARD	5082-2826-T25
D9	28349/011	DIODE SMALL-SIGNAL, SCHOTTKY, 5082-2826... 250mW 15V 1.2pF 1Vf @ 20mA, BATCH MATCHED TO WITHIN 10mV	HEWLETT-PACKARD	5082-2826-T25
D10	28383/932	DIODE PIN, HSMP-3810... 250mW 100V 1A 0.35pF Rs 4R0 MAX @ 100mA, MARKING CODE E0, LOW PROFILE,	HEWLETT-PACKARD	HSMP-3810-L31
IC1	28461/464	IC-ANALOGUE MICROWAVE-AMP INA-03184... 4V 10mA GAIN 25dB @ 1.5GHz, 3dB BANDWIDTH DC-2.5GHz,	HEWLETT-PACKARD	INA-03184-TR1
IC2	28461/448	IC-ANALOGUE MICROWAVE-AMP MSA-0386... 5V 35mA GAIN 12dB @ 1GHz, 3dB BANDWIDTH DC-2.4GHz, BIPOLAR, 4	HEWLETT-PACKARD	MSA-0386-TR1
IC3	28461/801	IC-ANALOGUE MICROWAVE-AMP MSA-1105... 5.5V 60mA GAIN 10.5dB @1GHz, 3dB B/WTH 0.05-1.3GHz, BIPOLAR,	HEWLETT-PACKARD	MSA-1105
IC4	28461/317	IC-ANALOGUE OPERATIONAL AMP NE531... SINGLE, LINEAR, SLEW-RATE 35V/uS TYP, 8 PIN, DUAL-IN-LINE.	PHILIPS	NE531N
IC5	28461/411	IC-ANALOGUE OPERATIONAL AMP TL071... SINGLE, JFET INPUT, LOW NOISE, 8 PIN, SMALL-OUTLINE.	MOTOROLA INC.	TL071CD
L5	23642/557	INDUCTOR-FIXED 22uH +/- 10% COATED-LACQUER, MINIATURE, 260mA 3R MAX, 55 Q @ 2.5 MHz, 25 MHz	MEGGITT ELECTRONICS	C11-406/8/27520/010
L6	23642/557	INDUCTOR-FIXED 22uH +/- 10% COATED-LACQUER, MINIATURE, 260mA 3R MAX, 55 Q @ 2.5 MHz, 25 MHz	MEGGITT ELECTRONICS	C11-406/8/27520/010
L7	23642/535	INDUCTOR-FIXED 1uH +/- 5% EPOXY-MOULD, 400mA 0R7 MAX, 30 Q @ 7.96 MHz, 120 MHz SRF, SURFACE	MEGGITT ELECTRONICS	3612-T-1R0-J
L8	23642/519	INDUCTOR-FIXED 0.068uH +/- 5% EPOXY-MOULD, 450mA 0R36 MAX, 27 Q @ 100 MHz, 1K MHz SRF, SURFACE	MEGGITT ELECTRONICS	3612-T-068-J
L9	23642/064	INDUCTOR-FIXED 1mH +/- 10% UNSCREENED, AIR-CORED, 510mA 1R176 MAX, 20 Q @ 0.796 MHz, 13mm HIGH MAX,	TOKO (UK) LTD	494HYF0140K
L10	23642/519	INDUCTOR-FIXED 0.068uH +/- 5% EPOXY-MOULD, 450mA 0R36 MAX, 27 Q @ 100 MHz, 1K MHz SRF, SURFACE	MEGGITT ELECTRONICS	3612-T-068-J
L11	23642/519	INDUCTOR-FIXED 0.068uH +/- 5% EPOXY-MOULD, 450mA 0R36 MAX, 27 Q @ 100 MHz, 1K MHz SRF, SURFACE	MEGGITT ELECTRONICS	3612-T-068-J

Clr. Ref.	MI part number	Description	Manufacturer	Manufacturer's part number
RF output amplifier and AM modulator A6/1 (contd.)				
L12	23642/516	INDUCTOR-FIXED 0.022uH +/- 10% EPOXY-MOULD, 450mA 0R2 MAX, 23 Q @ 100 MHz, 1.7K MHz SRF, SURFACE	MEGGITT ELECTRONICS	3612-T-022-K
L13	23642/064	INDUCTOR-FIXED 1mH +/- 10% UNSCREENED, AIR-CORED, 510mA 1R176 MAX, 20 Q @ 0.796 MHz, 13mm HIGH MAX,	TOKO (UK) LTD	494HYF0140K
R1	24811/182	RESISTOR-FIXED METAL-FILM 2K43 +/- 1% 250mW 200V 50 ppm/DEG.C, SURFACE MOUNTED, SIZE MINI-MELF,	VISHAY COMPONENTS	SMM0204-2K43-1%50ppm
R2	24811/157	RESISTOR-FIXED METAL-FILM 221R +/- 1% 250mW 200V 50 ppm/DEG.C, SURFACE MOUNTED, SIZE MINI-MELF,	VISHAY COMPONENTS	SMM0204-221R-1%50ppm
R3	24811/157	RESISTOR-FIXED METAL-FILM 221R +/- 1% 250mW 200V 50 ppm/DEG.C, SURFACE MOUNTED, SIZE MINI-MELF,	VISHAY COMPONENTS	SMM0204-221R-1%50ppm
R4	24811/173	RESISTOR-FIXED METAL-FILM 1K +/- 1% 250mW 200V 50 ppm/DEG.C, SURFACE MOUNTED, SIZE MINI-MELF, (8mm	VISHAY COMPONENTS	SMM0204-1K0-1%-50ppm
R5	24762/558	RESISTOR-FIXED METAL-FILM 50R +/- 1% 250mW 250V 100 ppm/DEG.C, NON-INDUCTIVE, AXIAL CUT, AXIAL,	MEGGITT ELECTRONICS	H8N-50R-1%-100ppm
R6	24338/006	RESISTOR-FIXED METAL-GLAZE 220R +/- 5% 1W 100V 350 ppm/DEG.C, SURFACE MOUNTED, SIZE 2512, (12mm	VISHAY COMPONENTS	CR2512-220R-5%-P4
R7	24811/193	RESISTOR-FIXED METAL-FILM 6K81 +/- 1% 250mW 200V 50 ppm/DEG.C, SURFACE MOUNTED, SIZE MINI-MELF,	VISHAY COMPONENTS	SMM0204-6K81-1%50ppm
R8	24811/193	RESISTOR-FIXED METAL-FILM 6K81 +/- 1% 250mW 200V 50 ppm/DEG.C, SURFACE MOUNTED, SIZE MINI-MELF,	VISHAY COMPONENTS	SMM0204-6K81-1%50ppm
R9	24811/237	RESISTOR-FIXED METAL-FILM 475K +/- 1% 250mW 200V 50 ppm/DEG.C, SURFACE MOUNTED, SIZE MINI-MELF,	VISHAY COMPONENTS	SMM0204-475K-1%50ppm
R10	24811/237	RESISTOR-FIXED METAL-FILM 475K +/- 1% 250mW 200V 50 ppm/DEG.C, SURFACE MOUNTED, SIZE MINI-MELF,	VISHAY COMPONENTS	SMM0204-475K-1%50ppm
R11	24338/002	RESISTOR-FIXED METAL-GLAZE 100R +/- 5% 1W 100V 350 ppm/DEG.C, SURFACE MOUNTED, SIZE 2512, (12mm	VISHAY COMPONENTS	CR2512-100R-5%-P4
R15	24811/169	RESISTOR-FIXED METAL-FILM 681R +/- 1% 250mW 200V 50 ppm/DEG.C, SURFACE MOUNTED, SIZE MINI-MELF,	VISHAY COMPONENTS	SMM0204-681R-1%50ppm
R16	24811/147	RESISTOR-FIXED METAL-FILM 82R5 +/- 1% 250mW 200V 50 ppm/DEG.C, SURFACE MOUNTED, SIZE MINI-MELF,	VISHAY COMPONENTS	SMM0204-82R5-1%50ppm
R17	24811/189	RESISTOR-FIXED METAL-FILM 4K75 +/- 1% 250mW 200V 50 ppm/DEG.C, SURFACE MOUNTED, SIZE MINI-MELF,	VISHAY COMPONENTS	SMM0204-4K75-1%50ppm
R18	24811/189	RESISTOR-FIXED METAL-FILM 4K75 +/- 1% 250mW 200V 50 ppm/DEG.C, SURFACE MOUNTED, SIZE MINI-MELF,	VISHAY COMPONENTS	SMM0204-4K75-1%50ppm
R21	24811/187	RESISTOR-FIXED METAL-FILM 3K92 +/- 1% 250mW 200V 50 ppm/DEG.C, SURFACE MOUNTED, SIZE MINI-MELF,	VISHAY COMPONENTS	SMM0204-3K92-1%50ppm
R22	24811/173	RESISTOR-FIXED METAL-FILM 1K +/- 1% 250mW 200V 50 ppm/DEG.C, SURFACE MOUNTED, SIZE MINI-MELF, (8mm	VISHAY COMPONENTS	SMM0204-1K0-1%-50ppm
R24	24811/159	RESISTOR-FIXED METAL-FILM 274R +/- 1% 250mW 200V 50 ppm/DEG.C, SURFACE MOUNTED, SIZE MINI-MELF,	VISHAY COMPONENTS	SMM0204-274R-1%50ppm
R25	24811/157	RESISTOR-FIXED METAL-FILM 221R +/- 1% 250mW 200V 50 ppm/DEG.C, SURFACE MOUNTED, SIZE MINI-MELF,	VISHAY COMPONENTS	SMM0204-221R-1%50ppm
R26	24811/167	RESISTOR-FIXED METAL-FILM 562R +/- 1% 250mW 200V 50 ppm/DEG.C, SURFACE MOUNTED, SIZE MINI-MELF,	VISHAY COMPONENTS	SMM0204-562R-1%50ppm
R27	24811/153	RESISTOR-FIXED METAL-FILM 150R +/- 1% 250mW 200V 50 ppm/DEG.C, SURFACE MOUNTED, SIZE MINI-MELF,	VISHAY COMPONENTS	SMM0204-150R-1%50ppm
SKC	23435/990	CONNECTOR SHORTING, SOCKET, 2 WAY, FOR 0.64mm SQ PINS, 2.54mm PITCH, 9.6mm HIGH, FREE MOUNTING,	BERG ELECTRONICS	65474-001

Cir. Ref.	MI part number	Description	Manufacturer	Manufacturer's part number

1st local oscillator control A7/1

When ordering, prefix circuit reference with A7/1.

	44830-111	Complete unit		Issue 003
C1	26386/899	CAPACITOR-FIXED CERAMIC 100nF +/-10% 50V X7R/2C1, MULTILAYER, SURFACE-MOUNTED, SIZE 1206, NICKEL	ROHM ELECTRONICS LTD	MCH31-5C-104-KP
C2	26386/899	CAPACITOR-FIXED CERAMIC 100nF +/-10% 50V X7R/2C1, MULTILAYER, SURFACE-MOUNTED, SIZE 1206, NICKEL	ROHM ELECTRONICS LTD	MCH31-5C-104-KP
C3	26451/009	CAPACITOR-FIXED ALUMINIUM 47uF +/-20% 16V ELECTROLYTIC, SURFACE-MOUNTED, SIZE 6.6 x 6.6mm,	PANASONIC INDUSTRIAL	ECE-V-1CA-470P
C4	26386/899	CAPACITOR-FIXED CERAMIC 100nF +/-10% 50V X7R/2C1, MULTILAYER, SURFACE-MOUNTED, SIZE 1206, NICKEL	ROHM ELECTRONICS LTD	MCH31-5C-104-KP
C5	26386/899	CAPACITOR-FIXED CERAMIC 100nF +/-10% 50V X7R/2C1, MULTILAYER, SURFACE-MOUNTED, SIZE 1206, NICKEL	ROHM ELECTRONICS LTD	MCH31-5C-104-KP
C6	26451/009	CAPACITOR-FIXED ALUMINIUM 47uF +/-20% 16V ELECTROLYTIC, SURFACE-MOUNTED, SIZE 6.6 x 6.6mm,	PANASONIC INDUSTRIAL	ECE-V-1CA-470P
C7	26386/899	CAPACITOR-FIXED CERAMIC 100nF +/-10% 50V X7R/2C1, MULTILAYER, SURFACE-MOUNTED, SIZE 1206, NICKEL	ROHM ELECTRONICS LTD	MCH31-5C-104-KP
C8	26386/899	CAPACITOR-FIXED CERAMIC 100nF +/-10% 50V X7R/2C1, MULTILAYER, SURFACE-MOUNTED, SIZE 1206, NICKEL	ROHM ELECTRONICS LTD	MCH31-5C-104-KP
C9	26451/009	CAPACITOR-FIXED ALUMINIUM 47uF +/-20% 16V ELECTROLYTIC, SURFACE-MOUNTED, SIZE 6.6 x 6.6mm,	PANASONIC INDUSTRIAL	ECE-V-1CA-470P
C10	26386/899	CAPACITOR-FIXED CERAMIC 100nF +/-10% 50V X7R/2C1, MULTILAYER, SURFACE-MOUNTED, SIZE 1206, NICKEL	ROHM ELECTRONICS LTD	MCH31-5C-104-KP
C14	26386/816	CAPACITOR-FIXED CERAMIC 22pF +/-5% 50V NPO MULTILAYER, SURFACE-MOUNTED, SIZE 0805, NICKEL	ROHM ELECTRONICS LTD	MCH21-5A-220-JP
C15 to C19	26386/777	CAPACITOR-FIXED CERAMIC 47nF +/-20% 63V X7R/2C1, MULTILAYER, SURFACE-MOUNTED, SIZE 1206, NICKEL	PHILIPS	1206-2R-473-K9-BBC
C20 to C29	26386/863	CAPACITOR-FIXED CERAMIC 1nF +/-10% 50V X7R/2C1, MULTILAYER, SURFACE-MOUNTED, SIZE 0805, NICKEL	ROHM ELECTRONICS LTD	MCH21-5C-102-KP
C30	26386/777	CAPACITOR-FIXED CERAMIC 47nF +/-20% 63V X7R/2C1, MULTILAYER, SURFACE-MOUNTED, SIZE 1206, NICKEL	PHILIPS	1206-2R-473-K9-BBC
C34	26386/863	CAPACITOR-FIXED CERAMIC 1nF +/-10% 50V X7R/2C1, MULTILAYER, SURFACE-MOUNTED, SIZE 0805, NICKEL	ROHM ELECTRONICS LTD	MCH21-5C-102-KP
C35	26386/863	CAPACITOR-FIXED CERAMIC 1nF +/-10% 50V X7R/2C1, MULTILAYER, SURFACE-MOUNTED, SIZE 0805, NICKEL	ROHM ELECTRONICS LTD	MCH21-5C-102-KP
C36	26343/788	CAPACITOR-FIXED CERAMIC 680pF +/-5% 50V NPO MULTILAYER, SURFACE-MOUNTED, SIZE 0805, NICKEL	ROHM ELECTRONICS LTD	MCH21-5A-681-JP
C37	26386/777	CAPACITOR-FIXED CERAMIC 47nF +/-20% 63V X7R/2C1, MULTILAYER, SURFACE-MOUNTED, SIZE 1206, NICKEL	PHILIPS	1206-2R-473-K9-BBC
C38	26343/788	CAPACITOR-FIXED CERAMIC 680pF +/-5% 50V NPO MULTILAYER, SURFACE-MOUNTED, SIZE 0805, NICKEL	ROHM ELECTRONICS LTD	MCH21-5A-681-JP
C39	26343/788	CAPACITOR-FIXED CERAMIC 680pF +/-5% 50V NPO MULTILAYER, SURFACE-MOUNTED, SIZE 0805, NICKEL	ROHM ELECTRONICS LTD	MCH21-5A-681-JP
C40	26386/777	CAPACITOR-FIXED CERAMIC 47nF +/-20% 63V X7R/2C1, MULTILAYER, SURFACE-MOUNTED, SIZE 1206, NICKEL	PHILIPS	1206-2R-473-K9-BBC
C43	26343/788	CAPACITOR-FIXED CERAMIC 680pF +/-5% 50V NPO MULTILAYER, SURFACE-MOUNTED, SIZE 0805, NICKEL	ROHM ELECTRONICS LTD	MCH21-5A-681-JP
C44 to C46	26386/777	CAPACITOR-FIXED CERAMIC 47nF +/-20% 63V X7R/2C1, MULTILAYER, SURFACE-MOUNTED, SIZE 1206, NICKEL	PHILIPS	1206-2R-473-K9-BBC

Cir. Ref.	MI part number	Description	Manufacturer	Manufacturer's part number
1st local oscillator control A7/1 (contd.)				
C47	26343/788	CAPACITOR-FIXED CERAMIC 680pF +/-5% 50V NPO MULTILAYER, SURFACE-MOUNTED, SIZE 0805, NICKEL	ROHM ELECTRONICS LTD	MCH21-5A-681-JP
C48	26451/010	CAPACITOR-FIXED ALUMINIUM 100uF +/-20% 6.3V ELECTROLYTIC, SURFACE-MOUNTED, SIZE 6.6 x 6.6mm,	PANASONIC INDUSTRIAL	ECE-V-0JA-101P
C49	26386/804	CAPACITOR-FIXED CERAMIC 2.2pF +/-0.5pF 50V NPO MULTILAYER, SURFACE-MOUNTED, SIZE 0805, NICKEL	ROHM ELECTRONICS LTD	MCH21-5A-2R2-DP
D1	28349/032	DIODE SMALL-SIGNAL, SCHOTTKY, HSMS-2820... 8V 1pF 340mVf @ 1mA, MARKNG CODE C0, LOW PROFILE, SURFACE	HEWLETT-PACKARD	HSMS-2820-L31
D2	28383/910	DIODE SMALL-SIGNAL, BAS28... DUAL, 330mW 75V 250mA ELECTRICALLY ISOLATED, MARKING CODE A61 OR JT,	PHILIPS	BAS28
D3	28383/910	DIODE SMALL-SIGNAL, BAS28... DUAL, 330mW 75V 250mA ELECTRICALLY ISOLATED, MARKING CODE A61 OR JT,	PHILIPS	BAS28
IC1	28466/413	IC-DIGITAL EXCLUSIVE-OR 74AC86... 2 INPUT, QUAD, CMOS-ADVANCED, 14 PIN, SMALL-OUTLINE.	NAT. SEMICONDUCTOR	74AC86SC
IC3	28469/568	IC-DIGITAL DIVIDER SP8400... DIVIDE BY 8/9, 1.5GHz PRESCALER, PHASE NOISE < 160dBc/Hz, 3 BIT A & 9	GEC PLESSEY SEMICOND	SP8400-KG-MPES
IC4	28461/454	IC-ANALOGUE MICROWAVE-AMP MSA-0786... 4V 22mA GAIN 12.5dB @ 1GHz, 3dB BANDWIDTH DC-2GHz, BIPOLAR, 4	HEWLETT-PACKARD	MSA-0786-TR1
IC5	28469/577	IC-DIGITAL DIVIDER SP4902... DIVIDE BY 2, 2.5GHz, PRESCALER, ECL, 8 PIN, SMALL-OUTLINE.		
IC6	28461/454	IC-ANALOGUE MICROWAVE-AMP MSA-0786... 4V 22mA GAIN 12.5dB @ 1GHz, 3dB BANDWIDTH DC-2GHz, BIPOLAR, 4	HEWLETT-PACKARD	MSA-0786-TR1
IC7	28469/621	IC-DIGITAL ARRAY-LOGIC L5A1579... FRACTIONAL N CONTROL CHIP, 28 BIT BINARY, TO MI CUSTOM SPEC,	LSI LOGIC LTD	L5A1579
IC8	28462/645	IC-DIGITAL FLIP-FLOP/D-TYPE 74HC174... 6 INPUT, 6 BIT, HEX, POS EDGE TRIGGER & MASTER RESET,	PHILIPS	74HC174D
L1	23642/512	INDUCTOR-FIXED 22uH +/- 5% EPOXY-MOULD, 110mA 3R7 MAX, 30 Q @ 2.5 MHz, 25 MHz SRF, SURFACE MOUNTED,	MEGGITT ELECTRONICS	3612-T-220-J
L2	23642/716	INDUCTOR-FIXED 3.3uH +/- 5% EPOXY-MOULD, 260mA 1R2 MAX, 30 Q @ 7.96 MHz, 60 MHz SRF, SURFACE MOUNTED,	MEGGITT ELECTRONICS	3612-T-3R3-J
L3	23642/512	INDUCTOR-FIXED 22uH +/- 5% EPOXY-MOULD, 110mA 3R7 MAX, 30 Q @ 2.5 MHz, 25 MHz SRF, SURFACE MOUNTED,	MEGGITT ELECTRONICS	3612-T-220-J
L4	23642/510	INDUCTOR-FIXED 0.1uH +/- 5% EPOXY-MOULD, 450mA 0R44 MAX, 28 Q @ 100 MHz, 700 MHz SRF, SURFACE	MEGGITT ELECTRONICS	3612-T-R10-J
L5	23642/510	INDUCTOR-FIXED 0.1uH +/- 5% EPOXY-MOULD, 450mA 0R44 MAX, 28 Q @ 100 MHz, 700 MHz SRF, SURFACE	MEGGITT ELECTRONICS	3612-T-R10-J
R1	24811/125	RESISTOR-FIXED METAL-FILM 10R +/- 1% 250mW 200V 50 ppm/DEG.C, SURFACE MOUNTED, SIZE MINI-MELF, (8mm	VISHAY COMPONENTS	SMM0204-10R-1%-50ppm
R2	24811/181	RESISTOR-FIXED METAL-FILM 2K21 +/- 1% 250mW 200V 50 ppm/DEG.C, SURFACE MOUNTED, SIZE MINI-MELF,	VISHAY COMPONENTS	SMM0204-2K21-1%50ppm

Cir. Ref.	MI part number	Description	Manufacturer	Manufacturer's part number
1st local oscillator control A7/1 (contd.)				
R4	24811/161	RESISTOR-FIXED METAL-FILM 332R +/- 1% 250mW 200V 50 ppm/DEG.C, SURFACE MOUNTED, SIZE MINI-MELF,	VISHAY COMPONENTS	SMM0204-332R-1%50ppm
R5	24811/153	RESISTOR-FIXED METAL-FILM 150R +/- 1% 250mW 200V 50 ppm/DEG.C, SURFACE MOUNTED, SIZE MINI-MELF,	VISHAY COMPONENTS	SMM0204-150R-1%50ppm
R6	24811/174	RESISTOR-FIXED METAL-FILM 1K1 +/- 1% 250mW 200V 50 ppm/DEG.C, SURFACE MOUNTED, SIZE MINI-MELF, (8mm	VISHAY COMPONENTS	SMM0204-1K1-1%50ppm
R7	24811/161	RESISTOR-FIXED METAL-FILM 332R +/- 1% 250mW 200V 50 ppm/DEG.C, SURFACE MOUNTED, SIZE MINI-MELF,	VISHAY COMPONENTS	SMM0204-332R-1%50ppm
R8	24811/909	RESISTOR-FIXED METAL-FILM 51R1 +/- 1% 250mW 200V 50 ppm/DEG.C, LOW-INDUCTANCE, SURFACE MOUNTED,	VISHAY COMPONENTS	SMM0204-HF-51R1-1%
R9	24811/909	RESISTOR-FIXED METAL-FILM 51R1 +/- 1% 250mW 200V 50 ppm/DEG.C, LOW-INDUCTANCE, SURFACE MOUNTED,	VISHAY COMPONENTS	SMM0204-HF-51R1-1%
R10	24811/161	RESISTOR-FIXED METAL-FILM 332R +/- 1% 250mW 200V 50 ppm/DEG.C, SURFACE MOUNTED, SIZE MINI-MELF,	VISHAY COMPONENTS	SMM0204-332R-1%50ppm
R14	24811/161	RESISTOR-FIXED METAL-FILM 332R +/- 1% 250mW 200V 50 ppm/DEG.C, SURFACE MOUNTED, SIZE MINI-MELF,	VISHAY COMPONENTS	SMM0204-332R-1%50ppm
R15 to R25	24811/173	RESISTOR-FIXED METAL-FILM 1K +/- 1% 250mW 200V 50 ppm/DEG.C, SURFACE MOUNTED, SIZE MINI-MELF, (8mm	VISHAY COMPONENTS	SMM0204-1K0-1%-50ppm
R30	24811/157	RESISTOR-FIXED METAL-FILM 221R +/- 1% 250mW 200V 50 ppm/DEG.C, SURFACE MOUNTED, SIZE MINI-MELF,	VISHAY COMPONENTS	SMM0204-221R-1%50ppm
R31 to R33	24811/153	RESISTOR-FIXED METAL-FILM 150R +/- 1% 250mW 200V 50 ppm/DEG.C, SURFACE MOUNTED, SIZE MINI-MELF,	VISHAY COMPONENTS	SMM0204-150R-1%50ppm
R35	24811/909	RESISTOR-FIXED METAL-FILM 51R1 +/- 1% 250mW 200V 50 ppm/DEG.C, LOW-INDUCTANCE, SURFACE MOUNTED,	VISHAY COMPONENTS	SMM0204-HF-51R1-1%
R36	24811/928	RESISTOR-FIXED METAL-FILM 121R +/- 1% 250mW 200V 50 ppm/DEG.C, LOW-INDUCTANCE, SURFACE MOUNTED,	VISHAY COMPONENTS	SMM0204-HF-121R-1%
R37	24811/909	RESISTOR-FIXED METAL-FILM 51R1 +/- 1% 250mW 200V 50 ppm/DEG.C, LOW-INDUCTANCE, SURFACE MOUNTED,	VISHAY COMPONENTS	SMM0204-HF-51R1-1%
R38	24811/928	RESISTOR-FIXED METAL-FILM 121R +/- 1% 250mW 200V 50 ppm/DEG.C, LOW-INDUCTANCE, SURFACE MOUNTED,	VISHAY COMPONENTS	SMM0204-HF-121R-1%
R39	24811/173	RESISTOR-FIXED METAL-FILM 1K +/- 1% 250mW 200V 50 ppm/DEG.C, SURFACE MOUNTED, SIZE MINI-MELF, (8mm	VISHAY COMPONENTS	SMM0204-1K0-1%-50ppm
R40	24811/197	RESISTOR-FIXED METAL-FILM 10K +/- 1% 250mW 200V 50 ppm/DEG.C, SURFACE MOUNTED, SIZE MINI-MELF, (8mm	VISHAY COMPONENTS	SMM0204-10K-1%50ppm
R41	24811/205	RESISTOR-FIXED METAL-FILM 22K1 +/- 1% 250mW 200V 50 ppm/DEG.C, SURFACE MOUNTED, SIZE MINI-MELF,	VISHAY COMPONENTS	SMM0204-22K1-1%50ppm
R42	24681/549	RESISTOR-NETWORK BUSSED, THICK-FILM, 22K 2% 600mW 50V 200 ppm/DEG.C, 15 RESISTORS, SURFACE MOUNTED,	VISHAY COMPONENTS	SOMC16-01-223-G-TUBE
R57	24811/173	RESISTOR-FIXED METAL-FILM 1K +/- 1% 250mW 200V 50 ppm/DEG.C, SURFACE MOUNTED, SIZE MINI-MELF, (8mm	VISHAY COMPONENTS	SMM0204-1K0-1%-50ppm
R58 to R60	24811/197	RESISTOR-FIXED METAL-FILM 10K +/- 1% 250mW 200V 50 ppm/DEG.C, SURFACE MOUNTED, SIZE MINI-MELF, (8mm	VISHAY COMPONENTS	SMM0204-10K-1%50ppm
TR1	28457/852	TRANSISTOR PNP BIPOLAR BSR15... 40V 200MHz 300mW 600mA MARKING CODE CH/T7p, SURFACE MOUNTED,	PHILIPS	BSR15
TR2	28457/850	TRANSISTOR NPN BIPOLAR FMMT2369... 40V 600MHz 300mW 500mA 40hFE MIN @ 10mA, MARKING CODE *1J,	PHILIPS	PMBT2369
TR3	28457/850	TRANSISTOR NPN BIPOLAR FMMT2369... 40V 600MHz 300mW 500mA 40hFE MIN @ 10mA, MARKING CODE *1J,	PHILIPS	PMBT2369
TR4	28457/850	TRANSISTOR NPN BIPOLAR FMMT2369... 40V 600MHz 300mW 500mA 40hFE MIN @ 10mA, MARKING CODE *1J,	PHILIPS	PMBT2369

Cir. Ref.	MI part number	Description	Manufacturer	Manufacturer's part number

1st local oscillator A8/1

When ordering, prefix circuit reference with A8/1.

	44830-112	Complete unit	Issue 007	
C1	26386/899	CAPACITOR-FIXED CERAMIC 100nF +/-10% 50V X7R/2C1, MULTILAYER, SURFACE-MOUNTED, SIZE 1206, NICKEL	ROHM ELECTRONICS LTD	MCH31-5C-104-KP
C2	26451/002	CAPACITOR-FIXED ALUMINIUM 4.7uF +/-20% 35V ELECTROLYTIC, SURFACE-MOUNTED, SIZE 4.3 x 4.3mm,	PANASONIC INDUSTRIAL	ECE-V-1VA-4R7R
C3	26451/004	CAPACITOR-FIXED ALUMINIUM 10uF +/-20% 35V ELECTROLYTIC, SURFACE-MOUNTED, SIZE 5.3 x 5.3mm,	DUBILIER CAPACITORS	DVC-10/35-T/R
C4	26451/014	CAPACITOR-FIXED ALUMINIUM 220uF +/-20% 16V ELECTROLYTIC, SURFACE-MOUNTED, SIZE 10.3 x 10.3mm,	PANASONIC INDUSTRIAL	ECE-V-1E-A-221-P
C5	26451/010	CAPACITOR-FIXED ALUMINIUM 100uF +/-20% 6.3V ELECTROLYTIC, SURFACE-MOUNTED, SIZE 6.6 x 6.6mm,	PANASONIC INDUSTRIAL	ECE-V-0JA-101P
C6	26451/009	CAPACITOR-FIXED ALUMINIUM 47uF +/-20% 16V ELECTROLYTIC, SURFACE-MOUNTED, SIZE 6.6 x 6.6mm,	PANASONIC INDUSTRIAL	ECE-V-1CA-470P
C7	26451/003	CAPACITOR-FIXED ALUMINIUM 10uF +/-20% 16V ELECTROLYTIC, SURFACE-MOUNTED, SIZE 4.3 x 4.3mm,	PANASONIC INDUSTRIAL	ECE-V-1CA-100R
C8	26451/005	CAPACITOR-FIXED ALUMINIUM 22uF +/-20% 6.3V ELECTROLYTIC, SURFACE-MOUNTED, SIZE 4.3 x 4.3mm,	PANASONIC INDUSTRIAL	ECE-V-0JA-220R
C9	26386/875	CAPACITOR-FIXED CERAMIC 10nF +/-10% 50V X7R/2C1, MULTILAYER, SURFACE-MOUNTED, SIZE 0805, NICKEL	ROHM ELECTRONICS LTD	MCH21-5C-103-KP
C10 to C12	26386/899	CAPACITOR-FIXED CERAMIC 100nF +/-10% 50V X7R/2C1, MULTILAYER, SURFACE-MOUNTED, SIZE 1206, NICKEL	ROHM ELECTRONICS LTD	MCH31-5C-104-KP
C13	26386/816	CAPACITOR-FIXED CERAMIC 22pF +/-5% 50V NPO MULTILAYER, SURFACE-MOUNTED, SIZE 0805, NICKEL	ROHM ELECTRONICS LTD	MCH21-5A-220-JP
C14	26451/003	CAPACITOR-FIXED ALUMINIUM 10uF +/-20% 16V ELECTROLYTIC, SURFACE-MOUNTED, SIZE 4.3 x 4.3mm,	PANASONIC INDUSTRIAL	ECE-V-1CA-100R
C15	26585/002	CAPACITOR-FIXED POLYESTER 220nF +/-10% 25V SURFACE-MOUNTED, SIZE 2824, 4.8mm HIGH NOM,	PHILIPS	394-28224
C17	26421/128	CAPACITOR-FIXED ALUMINIUM 1000uF +/-20% 6.3V ELECTROLYTIC, RADIAL, 5mm PWP, (LOOSE OR TAPED).	PHILIPS	2222-037-50102
C18	26421/128	CAPACITOR-FIXED ALUMINIUM 1000uF +/-20% 6.3V ELECTROLYTIC, RADIAL, 5mm PWP, (LOOSE OR TAPED).	PHILIPS	2222-037-50102
C19	26386/871	CAPACITOR-FIXED CERAMIC 4.7nF +/-10% 50V X7R/2C1, MULTILAYER, SURFACE-MOUNTED, SIZE 0805, NICKEL	ROHM ELECTRONICS LTD	MCH21-5C-472-KP
C20	26386/881	CAPACITOR-FIXED CERAMIC 33nF +/-10% 50V X7R/2C1, MULTILAYER, SURFACE-MOUNTED, SIZE 1210, NICKEL	ROHM ELECTRONICS LTD	MCH32-5C-333-KP
C21	26386/875	CAPACITOR-FIXED CERAMIC 10nF +/-10% 50V X7R/2C1, MULTILAYER, SURFACE-MOUNTED, SIZE 0805, NICKEL	ROHM ELECTRONICS LTD	MCH21-5C-103-KP
C22	26585/001	CAPACITOR-FIXED POLYESTER 1uF +/-10% 63V SURFACE-MOUNTED, SIZE 7.3 x 10mm, 4.5mm HIGH NOM,	WIMA CAPACITORS LTD	SMD7.3-1uF10%-63V-TR
C23	26585/001	CAPACITOR-FIXED POLYESTER 1uF +/-10% 63V SURFACE-MOUNTED, SIZE 7.3 x 10mm, 4.5mm HIGH NOM,	WIMA CAPACITORS LTD	SMD7.3-1uF10%-63V-TR
C24	26451/004	CAPACITOR-FIXED ALUMINIUM 10uF +/-20% 35V ELECTROLYTIC, SURFACE-MOUNTED, SIZE 5.3 x 5.3mm,	DUBILIER CAPACITORS	DVC-10/35-T/R
C25	26386/824	CAPACITOR-FIXED CERAMIC 100pF +/-5% 50V NP0 MULTILAYER, SURFACE-MOUNTED, SIZE 0805, NICKEL	ROHM ELECTRONICS LTD	MCH21-5A-101-JP
C26	26386/808	CAPACITOR-FIXED CERAMIC 4.7pF +/-0.5pF 50V NPO MULTILAYER, SURFACE-MOUNTED, SIZE 0805, NICKEL	ROHM ELECTRONICS LTD	MCH21-5A-4R7-DP

Cir. Ref.	MI part number	Description	Manufacturer	Manufacturer's part number
1st local oscillator A8/1 (contd.)				
C27	26386/808	CAPACITOR-FIXED CERAMIC 4.7pF +/-0.5pF 50V NPO MULTILAYER, SURFACE-MOUNTED, SIZE 0805, NICKEL	ROHM ELECTRONICS LTD	MCH21-5A-4R7-DP
C28	26386/824	CAPACITOR-FIXED CERAMIC 100pF +/-5% 50V NP0 MULTILAYER, SURFACE-MOUNTED, SIZE 0805, NICKEL	ROHM ELECTRONICS LTD	MCH21-5A-101-JP
C29	26386/824	CAPACITOR-FIXED CERAMIC 100pF +/-5% 50V NP0 MULTILAYER, SURFACE-MOUNTED, SIZE 0805, NICKEL	ROHM ELECTRONICS LTD	MCH21-5A-101-JP
C34 to C44	26386/899	CAPACITOR-FIXED CERAMIC 100nF +/-10% 50V X7R/2C1, MULTILAYER, SURFACE-MOUNTED, SIZE 1206, NICKEL	ROHM ELECTRONICS LTD	MCH31-5C-104-KP
D1	28371/735	DIODE ZENER, BZX84-C8V2... 250mW 8.2V 5% 250mA MARKING CODE Z7, SURFACE MOUNTED, SOT-23, (8mm	PHILIPS	BZX84-C8V2
D2	28624/136	LED RED, SIZE T1, 3mm DIA, HLMP-1301... 2.4 Vf TYP, 90 mA If MAX, 2.5 mcd @ 10mA - 60 DEG,	HEWLETT-PACKARD	HLMP-1301
D3	28371/443	DIODE ZENER, BZX84-C5V6... 250mW 5.6V 5% 250mA MARKING CODE Z3, SURFACE MOUNTED, SOT-23, (8mm	PHILIPS	BZX84-C5V6
D4	28372/215	DIODE ZENER, BZX84-C12... 250mW 12V 5% 250mA MARKING CODE Y2, SURFACE MOUNTED, SOT-23, (8mm	PHILIPS	BZX84-C12 (Y2)
IC1	28461/792	IC-ANALOGUE VOLTAGE-REGULATOR LM317L... 32V 100mA POSITIVE ADJUSTABLE, LINEAR, MONOLITHIC, 8 PIN,	NAT. SEMICONDUCTOR	LM317LM
IC2	28461/780	IC-ANALOGUE VOLTAGE-REGULATOR 79L05AC... 5V 100mA NEGATIVE, LINEAR, 5% REGULATION, MONOLITHIC, 8	NAT. SEMICONDUCTOR	LM79L05ACM
IC5	28462/146	IC-DIGITAL FLIP-FLOP/D-TYPE 74AC74... 2 BIT, DUAL, POS EDGE TRIGGER, PLUS SET & CLEAR, CMOS-ADVANCED,	NAT. SEMICONDUCTOR	74AC74SC
IC6	28466/239	IC-DIGITAL NOR-GATE 74AC02... 2 INPUT, QUAD, CMOS-ADVANCED, 14 PIN, SMALL-OUTLINE.	NAT. SEMICONDUCTOR	74AC02SC
IC7	28462/146	IC-DIGITAL FLIP-FLOP/D-TYPE 74AC74... 2 BIT, DUAL, POS EDGE TRIGGER, PLUS SET & CLEAR, CMOS-ADVANCED,	NAT. SEMICONDUCTOR	74AC74SC
IC8	28462/146	IC-DIGITAL FLIP-FLOP/D-TYPE 74AC74... 2 BIT, DUAL, POS EDGE TRIGGER, PLUS SET & CLEAR, CMOS-ADVANCED,	NAT. SEMICONDUCTOR	74AC74SC
IC9	28466/394	IC-DIGITAL NAND-GATE 74AC00... 2 INPUT, QUAD, CMOS-ADVANCED, 14 PIN, SMALL-OUTLINE.	NAT. SEMICONDUCTOR	74AC00SC
IC10	28461/413	IC-ANALOGUE OPERATIONAL AMP TL074... QUAD, JFET INPUT, LOW NOISE, SLEW RATE 8V/uS MIN, GAIN	MOTOROLA INC.	TL074CD
IC11	28461/845	IC-ANALOGUE SWITCH 74HC4316... QUAD, BILATERAL, WITH COMMON ENABLE, CMOS-H/SPEED, 16 PIN,	PHILIPS	74HC4316D
IC12	28461/520	IC-ANALOGUE OPERATIONAL AMP LT1028... SINGLE, 18V NOISE VOLTAGE DENSITY 1.9nV, SLEW-RATE 15V/uS TYP,	LINEAR TECHNOLOGY	LT1028CS8
IC13	28461/447	IC-ANALOGUE MICROWAVE-AMP MSA-0886... 7.8V 36mA GAIN 22.5dB @1GHz, 25dB BNDWIDTH DC-5GHz, BIPOLAR,	HEWLETT-PACKARD	MSA-0886-TR1
IC14	28461/447	IC-ANALOGUE MICROWAVE-AMP MSA-0886... 7.8V 36mA GAIN 22.5dB @1GHz, 25dB BNDWIDTH DC-5GHz, BIPOLAR,	HEWLETT-PACKARD	MSA-0886-TR1
IC15	28461/454	IC-ANALOGUE MICROWAVE-AMP MSA-0786... 4V 22mA GAIN 12.5dB @ 1GHz, 3dB BANDWIDTH DC-2GHz, BIPOLAR, 4	HEWLETT-PACKARD	MSA-0786-TR1
L1 to L4	23642/719	INDUCTOR-FIXED 220uH +/- 5% EPOXY-MOULD, 50mA 21R MAX, 20 Q @ 0.796 MHz, 7 MHz SRF, SURFACE MOUNTED,	MEGGITT ELECTRONICS	3612-T-221-J

Clr. Ref.	MI part number	Description	Manufacturer	Manufacturer's part number
1st local oscillator A8/1 (contd.)				
L5	23642/524	INDUCTOR-FIXED 1mH +/- 10% EPOXY-MOULD, 30mA 40R MAX, 30 Q @ 0.252 MHz, 2.5 MHz SRF, SURFACE	MEGGITT ELECTRONICS	3613-T-102-K
L6	23642/524	INDUCTOR-FIXED 1mH +/- 10% EPOXY-MOULD, 30mA 40R MAX, 30 Q @ 0.252 MHz, 2.5 MHz SRF, SURFACE	MEGGITT ELECTRONICS	3613-T-102-K
L7 to L9	23642/535	INDUCTOR-FIXED 1uH +/- 5% EPOXY-MOULD, 400mA 0R7 MAX, 30 Q @ 7.96 MHz, 120 MHz SRF, SURFACE	MEGGITT ELECTRONICS	3612-T-1R0-J
R1	24811/161	RESISTOR-FIXED METAL-FILM 332R +/- 1% 250mW 200V 50 ppm/DEG.C, SURFACE MOUNTED, SIZE MINI-MELF,	VISHAY COMPONENTS	SMM0204-332R-1%50ppm
R2	24811/194	RESISTOR-FIXED METAL-FILM 7K5 +/- 1% 250mW 200V 50 ppm/DEG.C, SURFACE MOUNTED, SIZE MINI-MELF, (8mm	VISHAY COMPONENTS	SMM0204-7K5-1%50ppm
R3	24811/149	RESISTOR-FIXED METAL-FILM 100R +/- 1% 250mW 200V 50 ppm/DEG.C, SURFACE MOUNTED, SIZE MINI-MELF,	VISHAY COMPONENTS	SMM0204-100R-1%50ppm
R4	24811/161	RESISTOR-FIXED METAL-FILM 332R +/- 1% 250mW 200V 50 ppm/DEG.C, SURFACE MOUNTED, SIZE MINI-MELF,	VISHAY COMPONENTS	SMM0204-332R-1%50ppm
R5	24811/161	RESISTOR-FIXED METAL-FILM 332R +/- 1% 250mW 200V 50 ppm/DEG.C, SURFACE MOUNTED, SIZE MINI-MELF,	VISHAY COMPONENTS	SMM0204-332R-1%50ppm
R6	24811/206	RESISTOR-FIXED METAL-FILM 24K3 +/- 1% 250mW 200V 50 ppm/DEG.C, SURFACE MOUNTED, SIZE MINI-MELF,	VISHAY COMPONENTS	SMM0204-24K3-1%50ppm
R7	24811/197	RESISTOR-FIXED METAL-FILM 10K +/- 1% 250mW 200V 50 ppm/DEG.C, SURFACE MOUNTED, SIZE MINI-MELF, (8mm	VISHAY COMPONENTS	SMM0204-10K-1%50ppm
R8	24811/216	RESISTOR-FIXED METAL-FILM 61K9 +/- 1% 250mW 200V 50 ppm/DEG.C, SURFACE MOUNTED, SIZE MINI-MELF,	VISHAY COMPONENTS	SMM0204-61K9-1%50ppm
R9	24811/226	RESISTOR-FIXED METAL-FILM 162K +/- 1% 250mW 200V 50 ppm/DEG.C, SURFACE MOUNTED, SIZE MINI-MELF,	VISHAY COMPONENTS	SMM0204-162K-1%50ppm
R10	24811/212	RESISTOR-FIXED METAL-FILM 43K2 +/- 1% 250mW 200V 50 ppm/DEG.C, SURFACE MOUNTED, SIZE MINI-MELF,	VISHAY COMPONENTS	SMM0204-43K2-1%50ppm
R11	24811/215	RESISTOR-FIXED METAL-FILM 56K2 +/- 1% 250mW 200V 50 ppm/DEG.C, SURFACE MOUNTED, SIZE MINI-MELF,	VISHAY COMPONENTS	SMM0204-56K2-1%50ppm
R12	24811/201	RESISTOR-FIXED METAL-FILM 15K +/- 1% 250mW 200V 50 ppm/DEG.C, SURFACE MOUNTED, SIZE MINI-MELF, (8mm	VISHAY COMPONENTS	SMM0204-15K-1%50ppm
R13	24811/197	RESISTOR-FIXED METAL-FILM 10K +/- 1% 250mW 200V 50 ppm/DEG.C, SURFACE MOUNTED, SIZE MINI-MELF, (8mm	VISHAY COMPONENTS	SMM0204-10K-1%50ppm
R14	24811/142	RESISTOR-FIXED METAL-FILM 51R1 +/- 1% 250mW 200V 50 ppm/DEG.C, SURFACE MOUNTED, SIZE MINI-MELF,	VISHAY COMPONENTS	SMM0204-51R1-1%50ppm
R15	24811/185	RESISTOR-FIXED METAL-FILM 3K32 +/- 1% 250mW 200V 50 ppm/DEG.C, SURFACE MOUNTED, SIZE MINI-MELF,	VISHAY COMPONENTS	SMM0204-3K32-1%50ppm
R16	24811/189	RESISTOR-FIXED METAL-FILM 4K75 +/- 1% 250mW 200V 50 ppm/DEG.C, SURFACE MOUNTED, SIZE MINI-MELF,	VISHAY COMPONENTS	SMM0204-4K75-1%50ppm
R17	24811/137	RESISTOR-FIXED METAL-FILM 33R2 +/- 1% 250mW 200V 50 ppm/DEG.C, SURFACE MOUNTED, SIZE MINI-MELF,	VISHAY COMPONENTS	SMM0204-33R2-1%50ppm
R18	24811/161	RESISTOR-FIXED METAL-FILM 332R +/- 1% 250mW 200V 50 ppm/DEG.C, SURFACE MOUNTED, SIZE MINI-MELF,	VISHAY COMPONENTS	SMM0204-332R-1%50ppm
R19	24811/137	RESISTOR-FIXED METAL-FILM 33R2 +/- 1% 250mW 200V 50 ppm/DEG.C, SURFACE MOUNTED, SIZE MINI-MELF,	VISHAY COMPONENTS	SMM0204-33R2-1%50ppm
R20	24811/171	RESISTOR-FIXED METAL-FILM 825R +/- 1% 250mW 200V 50 ppm/DEG.C, SURFACE MOUNTED, SIZE MINI-MELF,	VISHAY COMPONENTS	SMM0204-825R-1%50ppm
R21 to R24	24811/175	RESISTOR-FIXED METAL-FILM 1K21 +/- 1% 250mW 200V 50 ppm/DEG.C, SURFACE MOUNTED, SIZE MINI-MELF,	VISHAY COMPONENTS	SMM0204-1K21-1%50ppm
R25 to R27	24811/213	RESISTOR-FIXED METAL-FILM 47K5 +/- 1% 250mW 200V 50 ppm/DEG.C, SURFACE MOUNTED, SIZE MINI-MELF,	VISHAY COMPONENTS	SMM0204-47K5-1%50ppm

Cir. Ref.	MI part number	Description	Manufacturer	Manufacturer's part number
1st local oscillator A8/1 (contd.)				
R28	24811/245	RESISTOR-FIXED METAL-FILM 1M +/- 1% 250mW 200V 50 ppm/DEG.C, SURFACE MOUNTED, SIZE MINI-MELF, (8mm	VISHAY COMPONENTS	SMM0204-1M0-1%50ppm
R29	24811/175	RESISTOR-FIXED METAL-FILM 1K21 +/- 1% 250mW 200V 50 ppm/DEG.C, SURFACE MOUNTED, SIZE MINI-MELF,	VISHAY COMPONENTS	SMM0204-1K21-1%50ppm
R30	24811/197	RESISTOR-FIXED METAL-FILM 10K +/- 1% 250mW 200V 50 ppm/DEG.C, SURFACE MOUNTED, SIZE MINI-MELF, (8mm	VISHAY COMPONENTS	SMM0204-10K-1%50ppm
R31	24811/199	RESISTOR-FIXED METAL-FILM 12K1 +/- 1% 250mW 200V 50 ppm/DEG.C, SURFACE MOUNTED, SIZE MINI-MELF,	VISHAY COMPONENTS	SMM0204-12K1-1%50ppm
R32 to R35	24811/197	RESISTOR-FIXED METAL-FILM 10K +/- 1% 250mW 200V 50 ppm/DEG.C, SURFACE MOUNTED, SIZE MINI-MELF, (8mm	VISHAY COMPONENTS	SMM0204-10K-1%50ppm
R36	24811/137	RESISTOR-FIXED METAL-FILM 33R2 +/- 1% 250mW 200V 50 ppm/DEG.C, SURFACE MOUNTED, SIZE MINI-MELF,	VISHAY COMPONENTS	SMM0204-33R2-1%50ppm
R37	24811/137	RESISTOR-FIXED METAL-FILM 33R2 +/- 1% 250mW 200V 50 ppm/DEG.C, SURFACE MOUNTED, SIZE MINI-MELF,	VISHAY COMPONENTS	SMM0204-33R2-1%50ppm
R38	24811/161	RESISTOR-FIXED METAL-FILM 332R +/- 1% 250mW 200V 50 ppm/DEG.C, SURFACE MOUNTED, SIZE MINI-MELF,	VISHAY COMPONENTS	SMM0204-332R-1%50ppm
R39	24811/157	RESISTOR-FIXED METAL-FILM 221R +/- 1% 250mW 200V 50 ppm/DEG.C, SURFACE MOUNTED, SIZE MINI-MELF,	VISHAY COMPONENTS	SMM0204-221R-1%50ppm
R40	24811/149	RESISTOR-FIXED METAL-FILM 100R +/- 1% 250mW 200V 50 ppm/DEG.C, SURFACE MOUNTED, SIZE MINI-MELF,	VISHAY COMPONENTS	SMM0204-100R-1%50ppm
R41	24811/148	RESISTOR-FIXED METAL-FILM 90R9 +/- 1% 250mW 200V 50 ppm/DEG.C, SURFACE MOUNTED, SIZE MINI-MELF,	VISHAY COMPONENTS	SMM0204-90R9-1%50ppm
R42	24811/125	RESISTOR-FIXED METAL-FILM 10R +/- 1% 250mW 200V 50 ppm/DEG.C, SURFACE MOUNTED, SIZE MINI-MELF, (8mm	VISHAY COMPONENTS	SMM0204-10R-1%-50ppm
R44	24811/153	RESISTOR-FIXED METAL-FILM 150R +/- 1% 250mW 200V 50 ppm/DEG.C, SURFACE MOUNTED, SIZE MINI-MELF,	VISHAY COMPONENTS	SMM0204-150R-1%50ppm
R45	24811/901	RESISTOR-FIXED METAL-FILM 10R +/- 1% 250mW 200V 50 ppm/DEG.C, LOW-INDUCTANCE, SURFACE MOUNTED, SIZE	VISHAY COMPONENTS	SMM0204-HF-10R-1%
R46	24811/901	RESISTOR-FIXED METAL-FILM 10R +/- 1% 250mW 200V 50 ppm/DEG.C, LOW-INDUCTANCE, SURFACE MOUNTED, SIZE	VISHAY COMPONENTS	SMM0204-HF-10R-1%
R47	24811/923	RESISTOR-FIXED METAL-FILM 68R1 +/- 1% 250mW 200V 50 ppm/DEG.C, LOW-INDUCTANCE, SURFACE MOUNTED,	VISHAY COMPONENTS	SMM0204-HF-68R1-1%
R48	24811/911	RESISTOR-FIXED METAL-FILM 75R +/- 1% 250mW 200V 50 ppm/DEG.C, LOW-INDUCTANCE, SURFACE MOUNTED, SIZE	VISHAY COMPONENTS	SMM0204-HF-75R0-1%
R49	24811/901	RESISTOR-FIXED METAL-FILM 10R +/- 1% 250mW 200V 50 ppm/DEG.C, LOW-INDUCTANCE, SURFACE MOUNTED, SIZE	VISHAY COMPONENTS	SMM0204-HF-10R-1%
R50	24811/151	RESISTOR-FIXED METAL-FILM 121R +/- 1% 250mW 200V 50 ppm/DEG.C, SURFACE MOUNTED, SIZE MINI-MELF,	VISHAY COMPONENTS	SMM0204-121R-1%50ppm
R51	24811/161	RESISTOR-FIXED METAL-FILM 332R +/- 1% 250mW 200V 50 ppm/DEG.C, SURFACE MOUNTED, SIZE MINI-MELF,	VISHAY COMPONENTS	SMM0204-332R-1%50ppm
R52	24811/915	RESISTOR-FIXED METAL-FILM 150R +/- 1% 250mW 200V 50 ppm/DEG.C, LOW-INDUCTANCE, SURFACE MOUNTED,	VISHAY COMPONENTS	SMM0204-HF-150R-1%
R53	24811/906	RESISTOR-FIXED METAL-FILM 36R5 +/- 1% 250mW 200V 50 ppm/DEG.C, LOW-INDUCTANCE, SURFACE MOUNTED,	VISHAY COMPONENTS	SMM0204-HF-36R5-1%
R54	24811/915	RESISTOR-FIXED METAL-FILM 150R +/- 1% 250mW 200V 50 ppm/DEG.C, LOW-INDUCTANCE, SURFACE MOUNTED,	VISHAY COMPONENTS	SMM0204-HF-150R-1%
R55	24811/197	RESISTOR-FIXED METAL-FILM 10K +/- 1% 250mW 200V 50 ppm/DEG.C, SURFACE MOUNTED, SIZE MINI-MELF, (8mm	VISHAY COMPONENTS	SMM0204-10K-1%50ppm
R56 to R61	24811/125	RESISTOR-FIXED METAL-FILM 10R +/- 1% 250mW 200V 50 ppm/DEG.C, SURFACE MOUNTED, SIZE MINI-MELF, (8mm	VISHAY COMPONENTS	SMM0204-10R-1%-50ppm
R62	24811/175	RESISTOR-FIXED METAL-FILM 1K21 +/- 1% 250mW 200V 50 ppm/DEG.C, SURFACE MOUNTED, SIZE MINI-MELF,	VISHAY COMPONENTS	SMM0204-1K21-1%50ppm

1st local oscillator A8/1 (contd.)

Cir. Ref.	MI part number	Description	Manufacturer	Manufacturer's part number
TR1	28455/302	TRANSISTOR NPN BIPOLAR BCX54... 45V 130MHz 1W 1A 40hFE MIN @ 150mA, MARKING CODE BA, SURFACE	PHILIPS	BCX54
TR2	28453/829	TRANSISTOR NPN BIPOLAR BC848B... 30V 200MHz 200mW 100mA 290hFE @ 2mA, NOISE 2dB @ 1KHz, MARKING CODE	PHILIPS	BC848B
TR3	28433/828	TRANSISTOR PNP BIPOLAR BC858B... 30V 150MHz 200mW 100mA 220hFE MIN @ 2mA, MARKING CODE 3K, SURFACE	PHILIPS	BC858B
TR4	28457/851	TRANSISTOR NPN BIPOLAR BFS17... 15V 1.3GHz 250mW 50mA 20hFE MIN @ 2mA, MARKING CODE E1, SURFACE	PHILIPS	BFS17
TR5	28453/829	TRANSISTOR NPN BIPOLAR BC848B... 30V 200MHz 200mW 100mA 290hFE @ 2mA, NOISE 2dB @ 1KHz, MARKING CODE	PHILIPS	BC848B
TR6	28453/829	TRANSISTOR NPN BIPOLAR BC848B... 30V 200MHz 200mW 100mA 290hFE @ 2mA, NOISE 2dB @ 1KHz, MARKING CODE	PHILIPS	BC848B
TR7	28459/084	TRANSISTOR N-CHANNEL-ENHANCE MOSFET BST82... 80V 300mW 175mA 7R SWITCH ON & OFF <10nS, MARKING CODE	PHILIPS	BST82

Cir. Ref.	MI part number	Description	Manufacturer	Manufacturer's part number

2nd and 3rd local oscillator A9/1

When ordering, prefix circuit reference with A9/1.

	44830-097	Complete unit	Issue 007	
C1	26451/014	CAPACITOR-FIXED ALUMINIUM 220uF +/-20% 16V ELECTROLYTIC, SURFACE-MOUNTED, SIZE 10.3 x 10.3mm,	PANASONIC INDUSTRIAL	ECE-V-1E-A-221-P
C2	26421/128	CAPACITOR-FIXED ALUMINIUM 1000uF +/-20% 6.3V ELECTROLYTIC, RADIAL, 5mm PWP, (LOOSE OR TAPED).	PHILIPS	2222-037-50102
C3	26451/014	CAPACITOR-FIXED ALUMINIUM 220uF +/-20% 16V ELECTROLYTIC, SURFACE-MOUNTED, SIZE 10.3 x 10.3mm,	PANASONIC INDUSTRIAL	ECE-V-1E-A-221-P
C4	26451/006	CAPACITOR-FIXED ALUMINIUM 22uF +/-20% 16V ELECTROLYTIC, SURFACE-MOUNTED, SIZE 5.3 x 5.3mm,	RUBYCON CAPACITORS	16-REV-22
C5	26451/003	CAPACITOR-FIXED ALUMINIUM 10uF +/-20% 16V ELECTROLYTIC, SURFACE-MOUNTED, SIZE 4.3 x 4.3mm,	PANASONIC INDUSTRIAL	ECE-V-1CA-100R
C6	26451/008	CAPACITOR-FIXED ALUMINIUM 47uF +/-20% 6.3V ELECTROLYTIC, SURFACE-MOUNTED, SIZE 5.3 x 5.3mm,	PANASONIC INDUSTRIAL	ECE-V-0JA-470P
C7	26386/863	CAPACITOR-FIXED CERAMIC 1nF +/-10% 50V X7R/2C1, MULTILAYER, SURFACE-MOUNTED, SIZE 0805, NICKEL	ROHM ELECTRONICS LTD	MCH21-5C-102-KP
C8	26386/986	CAPACITOR-FIXED CERAMIC 1.8pF +/-0.1pF 50V 60 ppm/DEG.C, HIGH-Q, SINGLELAYER, SURFACE-MOUNTED,	AVX LTD	0805-5K-1R8-BAW-TR
C9	26386/875	CAPACITOR-FIXED CERAMIC 10nF +/-10% 50V X7R/2C1, MULTILAYER, SURFACE-MOUNTED, SIZE 0805, NICKEL	ROHM ELECTRONICS LTD	MCH21-5C-103-KP
C10	26386/899	CAPACITOR-FIXED CERAMIC 100nF +/-10% 50V X7R/2C1, MULTILAYER, SURFACE-MOUNTED, SIZE 1206, NICKEL	ROHM ELECTRONICS LTD	MCH31-5C-104-KP
C11	26386/824	CAPACITOR-FIXED CERAMIC 100pF +/-5% 50V NP0 MULTILAYER, SURFACE-MOUNTED, SIZE 0805, NICKEL	ROHM ELECTRONICS LTD	MCH21-5A-101-JP
C12	26386/808	CAPACITOR-FIXED CERAMIC 4.7pF +/-0.5pF 50V NPO MULTILAYER, SURFACE-MOUNTED, SIZE 0805, NICKEL	ROHM ELECTRONICS LTD	MCH21-5A-4R7-DP
C13	26386/863	CAPACITOR-FIXED CERAMIC 1nF +/-10% 50V X7R/2C1, MULTILAYER, SURFACE-MOUNTED, SIZE 0805, NICKEL	ROHM ELECTRONICS LTD	MCH21-5C-102-KP
C14	26386/824	CAPACITOR-FIXED CERAMIC 100pF +/-5% 50V NP0 MULTILAYER, SURFACE-MOUNTED, SIZE 0805, NICKEL	ROHM ELECTRONICS LTD	MCH21-5A-101-JP
C15	26386/875	CAPACITOR-FIXED CERAMIC 10nF +/-10% 50V X7R/2C1, MULTILAYER, SURFACE-MOUNTED, SIZE 0805, NICKEL	ROHM ELECTRONICS LTD	MCH21-5C-103-KP
C16	26386/808	CAPACITOR-FIXED CERAMIC 4.7pF +/-0.5pF 50V NPO MULTILAYER, SURFACE-MOUNTED, SIZE 0805, NICKEL	ROHM ELECTRONICS LTD	MCH21-5A-4R7-DP
C17	26386/808	CAPACITOR-FIXED CERAMIC 4.7pF +/-0.5pF 50V NPO MULTILAYER, SURFACE-MOUNTED, SIZE 0805, NICKEL	ROHM ELECTRONICS LTD	MCH21-5A-4R7-DP
C18	26386/875	CAPACITOR-FIXED CERAMIC 10nF +/-10% 50V X7R/2C1, MULTILAYER, SURFACE-MOUNTED, SIZE 0805, NICKEL	ROHM ELECTRONICS LTD	MCH21-5C-103-KP
C19	26386/824	CAPACITOR-FIXED CERAMIC 100pF +/-5% 50V NP0 MULTILAYER, SURFACE-MOUNTED, SIZE 0805, NICKEL	ROHM ELECTRONICS LTD	MCH21-5A-101-JP
C23	26386/863	CAPACITOR-FIXED CERAMIC 1nF +/-10% 50V X7R/2C1, MULTILAYER, SURFACE-MOUNTED, SIZE 0805, NICKEL	ROHM ELECTRONICS LTD	MCH21-5C-102-KP
C24	26386/863	CAPACITOR-FIXED CERAMIC 1nF +/-10% 50V X7R/2C1, MULTILAYER, SURFACE-MOUNTED, SIZE 0805, NICKEL	ROHM ELECTRONICS LTD	MCH21-5C-102-KP
C25 to C27	26386/899	CAPACITOR-FIXED CERAMIC 100nF +/-10% 50V X7R/2C1, MULTILAYER, SURFACE-MOUNTED, SIZE 1206, NICKEL	ROHM ELECTRONICS LTD	MCH31-5C-104-KP
C28	26451/010	CAPACITOR-FIXED ALUMINIUM 100uF +/-20% 6.3V ELECTROLYTIC, SURFACE-MOUNTED, SIZE 6.6 x 6.6mm,	PANASONIC INDUSTRIAL	ECE-V-0JA-101P

Cir. Ref.	MI part number	Description	Manufacturer	Manufacturer's part number
2nd & 3rd local oscillator A9/1 (contd.)				
C29	26386/863	CAPACITOR-FIXED CERAMIC 1nF +/-10% 50V X7R/2C1, MULTILAYER, SURFACE-MOUNTED, SIZE 0805, NICKEL	ROHM ELECTRONICS LTD	MCH21-5C-102-KP
C30 to C32	26386/899	CAPACITOR-FIXED CERAMIC 100nF +/-10% 50V X7R/2C1, MULTILAYER, SURFACE-MOUNTED, SIZE 1206, NICKEL	ROHM ELECTRONICS LTD	MCH31-5C-104-KP
C33	26386/863	CAPACITOR-FIXED CERAMIC 1nF +/-10% 50V X7R/2C1, MULTILAYER, SURFACE-MOUNTED, SIZE 0805, NICKEL	ROHM ELECTRONICS LTD	MCH21-5C-102-KP
C34	26451/005	CAPACITOR-FIXED ALUMINIUM 22uF +/-20% 6.3V ELECTROLYTIC, SURFACE-MOUNTED, SIZE 4.3 x 4.3mm,	PANASONIC INDUSTRIAL	ECE-V-0JA-220R
C35	26585/003	CAPACITOR-FIXED POLYESTER 470nF +/-10% 25V SURFACE-MOUNTED, SIZE 7.3 x 9mm, 4.8mm HIGH NOM,	PHILIPS	394-28474
C36	26386/899	CAPACITOR-FIXED CERAMIC 100nF +/-10% 50V X7R/2C1, MULTILAYER, SURFACE-MOUNTED, SIZE 1206, NICKEL	ROHM ELECTRONICS LTD	MCH31-5C-104-KP
C37	26386/899	CAPACITOR-FIXED CERAMIC 100nF +/-10% 50V X7R/2C1, MULTILAYER, SURFACE-MOUNTED, SIZE 1206, NICKEL	ROHM ELECTRONICS LTD	MCH31-5C-104-KP
C38	26343/767	CAPACITOR-FIXED CERAMIC 10pF +/-5% 50V NPO MULTILAYER, SURFACE-MOUNTED, SIZE 0805, NICKEL	ROHM ELECTRONICS LTD	MCH21-5A-100-DP
C39	26386/899	CAPACITOR-FIXED CERAMIC 100nF +/-10% 50V X7R/2C1, MULTILAYER, SURFACE-MOUNTED, SIZE 1206, NICKEL	ROHM ELECTRONICS LTD	MCH31-5C-104-KP
C40	26386/899	CAPACITOR-FIXED CERAMIC 100nF +/-10% 50V X7R/2C1, MULTILAYER, SURFACE-MOUNTED, SIZE 1206, NICKEL	ROHM ELECTRONICS LTD	MCH31-5C-104-KP
C41	26386/863	CAPACITOR-FIXED CERAMIC 1nF +/-10% 50V X7R/2C1, MULTILAYER, SURFACE-MOUNTED, SIZE 0805, NICKEL	ROHM ELECTRONICS LTD	MCH21-5C-102-KP
C42	26386/863	CAPACITOR-FIXED CERAMIC 1nF +/-10% 50V X7R/2C1, MULTILAYER, SURFACE-MOUNTED, SIZE 0805, NICKEL	ROHM ELECTRONICS LTD	MCH21-5C-102-KP
C43	26386/899	CAPACITOR-FIXED CERAMIC 100nF +/-10% 50V X7R/2C1, MULTILAYER, SURFACE-MOUNTED, SIZE 1206, NICKEL	ROHM ELECTRONICS LTD	MCH31-5C-104-KP
C44	26386/875	CAPACITOR-FIXED CERAMIC 10nF +/-10% 50V X7R/2C1, MULTILAYER, SURFACE-MOUNTED, SIZE 0805, NICKEL	ROHM ELECTRONICS LTD	MCH21-5C-103-KP
C45	26386/875	CAPACITOR-FIXED CERAMIC 10nF +/-10% 50V X7R/2C1, MULTILAYER, SURFACE-MOUNTED, SIZE 0805, NICKEL	ROHM ELECTRONICS LTD	MCH21-5C-103-KP
C46	26386/863	CAPACITOR-FIXED CERAMIC 1nF +/-10% 50V X7R/2C1, MULTILAYER, SURFACE-MOUNTED, SIZE 0805, NICKEL	ROHM ELECTRONICS LTD	MCH21-5C-102-KP
C47	26386/899	CAPACITOR-FIXED CERAMIC 100nF +/-10% 50V X7R/2C1, MULTILAYER, SURFACE-MOUNTED, SIZE 1206, NICKEL	ROHM ELECTRONICS LTD	MCH31-5C-104-KP
C48	26386/899	CAPACITOR-FIXED CERAMIC 100nF +/-10% 50V X7R/2C1, MULTILAYER, SURFACE-MOUNTED, SIZE 1206, NICKEL	ROHM ELECTRONICS LTD	MCH31-5C-104-KP
C49	26386/875	CAPACITOR-FIXED CERAMIC 10nF +/-10% 50V X7R/2C1, MULTILAYER, SURFACE-MOUNTED, SIZE 0805, NICKEL	ROHM ELECTRONICS LTD	MCH21-5C-103-KP
C50	26386/808	CAPACITOR-FIXED CERAMIC 4.7pF +/-0.5pF 50V NPO MULTILAYER, SURFACE-MOUNTED, SIZE 0805, NICKEL	ROHM ELECTRONICS LTD	MCH21-5A-4R7-DP
C51	26386/899	CAPACITOR-FIXED CERAMIC 100nF +/-10% 50V X7R/2C1, MULTILAYER, SURFACE-MOUNTED, SIZE 1206, NICKEL	ROHM ELECTRONICS LTD	MCH31-5C-104-KP
C52	26386/899	CAPACITOR-FIXED CERAMIC 100nF +/-10% 50V X7R/2C1, MULTILAYER, SURFACE-MOUNTED, SIZE 1206, NICKEL	ROHM ELECTRONICS LTD	MCH31-5C-104-KP
C53	26386/875	CAPACITOR-FIXED CERAMIC 10nF +/-10% 50V X7R/2C1, MULTILAYER, SURFACE-MOUNTED, SIZE 0805, NICKEL	ROHM ELECTRONICS LTD	MCH21-5C-103-KP
C54	26386/899	CAPACITOR-FIXED CERAMIC 100nF +/-10% 50V X7R/2C1, MULTILAYER, SURFACE-MOUNTED, SIZE 1206, NICKEL	ROHM ELECTRONICS LTD	MCH31-5C-104-KP
C55	26386/875	CAPACITOR-FIXED CERAMIC 10nF +/-10% 50V X7R/2C1, MULTILAYER, SURFACE-MOUNTED, SIZE 0805, NICKEL	ROHM ELECTRONICS LTD	MCH21-5C-103-KP
C56	26386/899	CAPACITOR-FIXED CERAMIC 100nF +/-10% 50V X7R/2C1, MULTILAYER, SURFACE-MOUNTED, SIZE 1206, NICKEL	ROHM ELECTRONICS LTD	MCH31-5C-104-KP

Cir. Ref.	MI part number	Description	Manufacturer	Manufacturer's part number
2nd & 3rd local oscillator A9/1 (contd.)				
C57	26386/875	CAPACITOR-FIXED CERAMIC 10nF +/-10% 50V X7R/2C1, MULTILAYER, SURFACE-MOUNTED, SIZE 0805, NICKEL	ROHM ELECTRONICS LTD	MCH21-5C-103-KP
C58	26386/899	CAPACITOR-FIXED CERAMIC 100nF +/-10% 50V X7R/2C1, MULTILAYER, SURFACE-MOUNTED, SIZE 1206, NICKEL	ROHM ELECTRONICS LTD	MCH31-5C-104-KP
C59	26386/817	CAPACITOR-FIXED CERAMIC 27pF +/-5% 50V NP0 MULTILAYER, SURFACE-MOUNTED, SIZE 0805, NICKEL	ROHM ELECTRONICS LTD	MCH21-5A-270-JP
C60	26386/863	CAPACITOR-FIXED CERAMIC 1nF +/-10% 50V X7R/2C1, MULTILAYER, SURFACE-MOUNTED, SIZE 0805, NICKEL	ROHM ELECTRONICS LTD	MCH21-5C-102-KP
C61	26386/820	CAPACITOR-FIXED CERAMIC 47pF +/-5% 50V NP0 MULTILAYER, SURFACE-MOUNTED, SIZE 0805, NICKEL	ROHM ELECTRONICS LTD	MCH21-5A-470-JP
C62	26386/824	CAPACITOR-FIXED CERAMIC 100pF +/-5% 50V NP0 MULTILAYER, SURFACE-MOUNTED, SIZE 0805, NICKEL	ROHM ELECTRONICS LTD	MCH21-5A-101-JP
C63	26451/010	CAPACITOR-FIXED ALUMINIUM 100uF +/-20% 6.3V ELECTROLYTIC, SURFACE-MOUNTED, SIZE 6.6 x 6.6mm,	PANASONIC INDUSTRIAL	ECE-V-0JA-101P
C64	26386/899	CAPACITOR-FIXED CERAMIC 100nF +/-10% 50V X7R/2C1, MULTILAYER, SURFACE-MOUNTED, SIZE 1206, NICKEL	ROHM ELECTRONICS LTD	MCH31-5C-104-KP
C65	26386/899	CAPACITOR-FIXED CERAMIC 100nF +/-10% 50V X7R/2C1, MULTILAYER, SURFACE-MOUNTED, SIZE 1206, NICKEL	ROHM ELECTRONICS LTD	MCH31-5C-104-KP
C66 to C68	26386/863	CAPACITOR-FIXED CERAMIC 1nF +/-10% 50V X7R/2C1, MULTILAYER, SURFACE-MOUNTED, SIZE 0805, NICKEL	ROHM ELECTRONICS LTD	MCH21-5C-102-KP
C69	26386/899	CAPACITOR-FIXED CERAMIC 100nF +/-10% 50V X7R/2C1, MULTILAYER, SURFACE-MOUNTED, SIZE 1206, NICKEL	ROHM ELECTRONICS LTD	MCH31-5C-104-KP
C70	26386/863	CAPACITOR-FIXED CERAMIC 1nF +/-10% 50V X7R/2C1, MULTILAYER, SURFACE-MOUNTED, SIZE 0805, NICKEL	ROHM ELECTRONICS LTD	MCH21-5C-102-KP
C71	26386/863	CAPACITOR-FIXED CERAMIC 1nF +/-10% 50V X7R/2C1, MULTILAYER, SURFACE-MOUNTED, SIZE 0805, NICKEL	ROHM ELECTRONICS LTD	MCH21-5C-102-KP
C72	26386/899	CAPACITOR-FIXED CERAMIC 100nF +/-10% 50V X7R/2C1, MULTILAYER, SURFACE-MOUNTED, SIZE 1206, NICKEL	ROHM ELECTRONICS LTD	MCH31-5C-104-KP
C73	26451/010	CAPACITOR-FIXED ALUMINIUM 100uF +/-20% 6.3V ELECTROLYTIC, SURFACE-MOUNTED, SIZE 6.6 x 6.6mm,	PANASONIC INDUSTRIAL	ECE-V-0JA-101P
C74	26386/863	CAPACITOR-FIXED CERAMIC 1nF +/-10% 50V X7R/2C1, MULTILAYER, SURFACE-MOUNTED, SIZE 0805, NICKEL	ROHM ELECTRONICS LTD	MCH21-5C-102-KP
C75	26386/875	CAPACITOR-FIXED CERAMIC 10nF +/-10% 50V X7R/2C1, MULTILAYER, SURFACE-MOUNTED, SIZE 0805, NICKEL	ROHM ELECTRONICS LTD	MCH21-5C-103-KP
C76 to C80	26386/899	CAPACITOR-FIXED CERAMIC 100nF +/-10% 50V X7R/2C1, MULTILAYER, SURFACE-MOUNTED, SIZE 1206, NICKEL	ROHM ELECTRONICS LTD	MCH31-5C-104-KP
C81	26386/863	CAPACITOR-FIXED CERAMIC 1nF +/-10% 50V X7R/2C1, MULTILAYER, SURFACE-MOUNTED, SIZE 0805, NICKEL	ROHM ELECTRONICS LTD	MCH21-5C-102-KP
C82	26386/875	CAPACITOR-FIXED CERAMIC 10nF +/-10% 50V X7R/2C1, MULTILAYER, SURFACE-MOUNTED, SIZE 0805, NICKEL	ROHM ELECTRONICS LTD	MCH21-5C-103-KP
C83	26585/003	CAPACITOR-FIXED POLYESTER 470nF +/-10% 25V SURFACE-MOUNTED, SIZE 7.3 x 9mm, 4.8mm HIGH NOM,	PHILIPS	394-28474
C84 to C87	26386/899	CAPACITOR-FIXED CERAMIC 100nF +/-10% 50V X7R/2C1, MULTILAYER, SURFACE-MOUNTED, SIZE 1206, NICKEL	ROHM ELECTRONICS LTD	MCH31-5C-104-KP
D1	28381/133	DIODE VARIABLE CAPACITNCE, BB515... 30V 20mA 2.1pF @ 28V, CAPAC RATIO 8.0 MIN, SURFACE MOUNTED,	PHILIPS	BB515
D3 to D5	28383/903	DIODE SMALL-SIGNAL, BAV99... DUAL, 70V 100mA 1.1Vf @ 50mA, IN SERIES, MARKING CODE A7, SURFACE	PHILIPS	BAV99 (A7)
D6	28381/341	DIODE VARIABLE CAPACITNCE, BBY40... 350mW 28V 20mA 4.3pF @ 25V, CAPAC RATIO 5.0 MIN, MARKING CODE S2,	PHILIPS	BBY40

Cir. Ref.	MI part number	Description	Manufacturer	Manufacturer's part number
2nd & 3rd local oscillator A9/1 (contd.)				
D7	28383/902	DIODE SMALL-SIGNAL, BAW56... DUAL, 70V 100mA 1.1Vf @ 50mA, COMMON ANODE, MARKING CODE A1, SURFACE	PHILIPS	BAW56 (A1)
D8	28624/136	LED RED, SIZE T1, 3mm DIA, HLMP-1301... 2.4 Vf TYP, 90 mA If MAX, 2.5 mcd @ 10mA - 60 DEG,	HEWLETT-PACKARD	HLMP-1301
D9	28383/902	DIODE SMALL-SIGNAL, BAW56... DUAL, 70V 100mA 1.1Vf @ 50mA, COMMON ANODE, MARKING CODE A1, SURFACE	PHILIPS	BAW56 (A1)
D10	28624/136	LED RED, SIZE T1, 3mm DIA, HLMP-1301... 2.4 Vf TYP, 90 mA If MAX, 2.5 mcd @ 10mA - 60 DEG,	HEWLETT-PACKARD	HLMP-1301
IC1	28461/792	IC-ANALOGUE VOLTAGE-REGULATOR LM317L... 32V 100mA POSITIVE ADJUSTABLE, LINEAR, MONOLITHIC, 8 PIN,	NAT. SEMICONDUCTOR	LM317LM
IC2	28461/780	IC-ANALOGUE VOLTAGE-REGULATOR 79L05AC... 5V 100mA NEGATIVE, LINEAR, 5% REGULATION, MONOLITHIC, 8	NAT. SEMICONDUCTOR	LM79L05ACM
IC3	28461/448	IC-ANALOGUE MICROWAVE-AMP MSA-0386... 5V 35mA GAIN 12dB @ 1GHz, 3dB BANDWIDTH DC-2.4GHz, BIPOLAR, 4	HEWLETT-PACKARD	MSA-0386-TR1
IC4	28461/450	IC-ANALOGUE MICROWAVE-AMP MSA-0486... 5.25V 50mA GAIN 8dB @ 1GHz, 3dB BANDWIDTH DC-3.2GHz, BIPOLAR,	HEWLETT-PACKARD	MSA-0486-TR1
IC6	28469/566	IC-DIGITAL DIVIDER SP8402... DIVIDE BY 2 TO 256 SELECTABLE BY 2n, 1.5GHz, PHASE NOISE <160 dBc/Hz,	GEC PLESSEY SEMICOND	SP8402-KG-MPES
IC7	28462/147	IC-DIGITAL FLIP-FLOP/D-TYPE 74ACT74... 2 BIT, DUAL, POS EDGE TRIGGER, PLUS SET & CLEAR,	NAT. SEMICONDUCTOR	74ACT74SC
IC8	28466/395	IC-DIGITAL NAND-GATE 74ACT00... 2 INPUT, QUAD, CMOS-ADVANCED+TTL, 14 PIN, SMALL-OUTLINE.	NAT. SEMICONDUCTOR	74ACT00SC
IC9	28461/897	IC-ANALOGUE OPERATIONAL AMP OP-27GS... 22V LOW NOISE, 8 PIN, SMALL-OUTLINE.	ANALOG DEVICES LTD	OP-27GS
IC10	28531/023	RF-MIXER DOUBLE-BALANCED, NE602A... >14dB GAIN @ 45MHz, 500MHz TYP SIG FREQ, 1K5 -15dBm INTERCEPT,	PHILIPS	NE602AD
IC11	28464/159	IC-DIGITAL COUNTER MC10H016... 4 BIT, BINARY, ECL, 16 PIN, DUAL-IN-LINE.	MOTOROLA INC.	MC10H016P
IC12	28462/147	IC-DIGITAL FLIP-FLOP/D-TYPE 74ACT74... 2 BIT, DUAL, POS EDGE TRIGGER, PLUS SET & CLEAR,	NAT. SEMICONDUCTOR	74ACT74SC
IC13	28466/395	IC-DIGITAL NAND-GATE 74ACT00... 2 INPUT, QUAD, CMOS-ADVANCED+TTL, 14 PIN, SMALL-OUTLINE.	NAT. SEMICONDUCTOR	74ACT00SC
IC14	28461/511	IC-ANALOGUE OPERATIONAL AMP OP275... DUAL, 15V BANDWIDTH PROD 9MHz, OFFSET 1mV, DRIFT 5uV/DEG.C,	ANALOG DEVICES LTD	OP275GS
L1 to L3	23642/064	INDUCTOR-FIXED 1mH +/- 10% UNSCREENED, AIR-CORED, 510mA 1R176 MAX, 20 Q @ 0.796 MHz, 13mm HIGH MAX,	TOKO (UK) LTD	494HYF0140K
L4 to L12	23642/535	INDUCTOR-FIXED 1uH +/- 5% EPOXY-MOULD, 400mA 0R7 MAX, 30 Q @ 7.96 MHz, 120 MHz SRF, SURFACE	MEGGITT ELECTRONICS	3612-T-1R0-J
L13	23642/533	INDUCTOR-FIXED 10uH +/- 5% EPOXY-MOULD, 150mA 2R1 MAX, 30 Q @ 2.52 MHz, 36 MHz SRF, SURFACE MOUNTED,	MEGGITT ELECTRONICS	3612-T-100-J
L14	23642/707	INDUCTOR-FIXED 100uH +/- 5% EPOXY-MOULD, 40mA 10R MAX, 20 Q @ 0.796 MHz, 10 MHz SRF, SURFACE	MEGGITT ELECTRONICS	3612-T-101-J
L15	23642/519	INDUCTOR-FIXED 0.068uH +/- 5% EPOXY-MOULD, 450mA 0R36 MAX, 27 Q @ 100 MHz, 1K MHz SRF, SURFACE	MEGGITT ELECTRONICS	3612-T-068-J
L16	23642/519	INDUCTOR-FIXED 0.068uH +/- 5% EPOXY-MOULD, 450mA 0R36 MAX, 27 Q @ 100 MHz, 1K MHz SRF, SURFACE	MEGGITT ELECTRONICS	3612-T-068-J
L17	23642/707	INDUCTOR-FIXED 100uH +/- 5% EPOXY-MOULD, 40mA 10R MAX, 20 Q @ 0.796 MHz, 10 MHz SRF, SURFACE	MEGGITT ELECTRONICS	3612-T-101-J

Cir. Ref.	MI part number	Description	Manufacturer	Manufacturer's part number
2nd & 3rd local oscillator A9/1 (contd.)				
L18	23642/535	INDUCTOR-FIXED 1uH +/- 5% EPOXY-MOULD, 400mA 0R7 MAX, 30 Q @ 7.96 MHz, 120 MHz SRF, SURFACE	MEGGITT ELECTRONICS	3612-T-1R0-J
L19	23642/535	INDUCTOR-FIXED 1uH +/- 5% EPOXY-MOULD, 400mA 0R7 MAX, 30 Q @ 7.96 MHz, 120 MHz SRF, SURFACE	MEGGITT ELECTRONICS	3612-T-1R0-J
L20	23642/526	INDUCTOR-FIXED 470uH +/- 10% EPOXY-MOULD, 62mA 26R MAX, 40 Q @ 0.796 MHz, 3 MHz SRF, SURFACE MOUNTED,	MEGGITT ELECTRONICS	3613-T-471-K
PLG	23445/501	CONNECTOR-RF MMCX-TYPE FEMALE, JACK, 50 OHMS, SURFACE MOUNTING, VERTICAL, DC-6GHz, GOLD PLATD	HUBER & SUHNER	82MMCX-S50-0-53
R1	24811/157	RESISTOR-FIXED METAL-FILM 221R +/- 1% 250mW 200V 50 ppm/DEG.C, SURFACE MOUNTED, SIZE MINI-MELF,	VISHAY COMPONENTS	SMM0204-221R-1%50ppm
R2	24811/176	RESISTOR-FIXED METAL-FILM 1K3 +/- 1% 250mW 200V 50 ppm/DEG.C, SURFACE MOUNTED, SIZE MINI-MELF, (8mm	VISHAY COMPONENTS	SMM0204-1K3-1%50ppm
R4	24321/400	RESISTOR-FIXED METAL-GLAZE 10R +/- 2% 100mW 100V 200 ppm/DEG.C, Ni-BARRIER & REFLOW HOT-DIP SOLDER,	VTM (UK) LTD	503-0-10R-1%-100ppm
R5	24321/412	RESISTOR-FIXED METAL-GLAZE 33R +/- 2% 100mW 100V 200 ppm/DEG.C, Ni-BARRIER & REFLOW HOT-DIP SOLDER,	VTM (UK) LTD	503-0-33R-1%-100ppm
R6 to R10	24811/149	RESISTOR-FIXED METAL-FILM 100R +/- 1% 250mW 200V 50 ppm/DEG.C, SURFACE MOUNTED, SIZE MINI-MELF,	VISHAY COMPONENTS	SMM0204-100R-1%50ppm
R11	24811/145	RESISTOR-FIXED METAL-FILM 68R1 +/- 1% 250mW 200V 50 ppm/DEG.C, SURFACE MOUNTED, SIZE MINI-MELF,	VISHAY COMPONENTS	SMM0204-68R1-1%50ppm
R12	24811/145	RESISTOR-FIXED METAL-FILM 68R1 +/- 1% 250mW 200V 50 ppm/DEG.C, SURFACE MOUNTED, SIZE MINI-MELF,	VISHAY COMPONENTS	SMM0204-68R1-1%50ppm
R13	24811/159	RESISTOR-FIXED METAL-FILM 274R +/- 1% 250mW 200V 50 ppm/DEG.C, SURFACE MOUNTED, SIZE MINI-MELF,	VISHAY COMPONENTS	SMM0204-274R-1%50ppm
R14	24811/909	RESISTOR-FIXED METAL-FILM 51R1 +/- 1% 250mW 200V 50 ppm/DEG.C, LOW-INDUCTANCE, SURFACE MOUNTED,	VISHAY COMPONENTS	SMM0204-HF-51R1-1%
R15	24811/169	RESISTOR-FIXED METAL-FILM 681R +/- 1% 250mW 200V 50 ppm/DEG.C, SURFACE MOUNTED, SIZE MINI-MELF,	VISHAY COMPONENTS	SMM0204-681R-1%50ppm
R16	24811/903	RESISTOR-FIXED METAL-FILM 18R2 +/- 1% 250mW 200V 50 ppm/DEG.C, LOW-INDUCTANCE, SURFACE MOUNTED,	VISHAY COMPONENTS	SMM0204-HF-18R2-1%
R17	24811/161	RESISTOR-FIXED METAL-FILM 332R +/- 1% 250mW 200V 50 ppm/DEG.C, SURFACE MOUNTED, SIZE MINI-MELF,	VISHAY COMPONENTS	SMM0204-332R-1%50ppm
R20	24811/161	RESISTOR-FIXED METAL-FILM 332R +/- 1% 250mW 200V 50 ppm/DEG.C, SURFACE MOUNTED, SIZE MINI-MELF,	VISHAY COMPONENTS	SMM0204-332R-1%50ppm
R21	24811/137	RESISTOR-FIXED METAL-FILM 33R2 +/- 1% 250mW 200V 50 ppm/DEG.C, SURFACE MOUNTED, SIZE MINI-MELF,	VISHAY COMPONENTS	SMM0204-33R2-1%50ppm
R22	24811/197	RESISTOR-FIXED METAL-FILM 10K +/- 1% 250mW 200V 50 ppm/DEG.C, SURFACE MOUNTED, SIZE MINI-MELF, (8mm	VISHAY COMPONENTS	SMM0204-10K-1%50ppm
R23	24811/165	RESISTOR-FIXED METAL-FILM 475R +/- 1% 250mW 200V 50 ppm/DEG.C, SURFACE MOUNTED, SIZE MINI-MELF,	VISHAY COMPONENTS	SMM0204-475R-1%50ppm
R24	24811/189	RESISTOR-FIXED METAL-FILM 4K75 +/- 1% 250mW 200V 50 ppm/DEG.C, SURFACE MOUNTED, SIZE MINI-MELF,	VISHAY COMPONENTS	SMM0204-4K75-1%50ppm
R25	24811/182	RESISTOR-FIXED METAL-FILM 2K43 +/- 1% 250mW 200V 50 ppm/DEG.C, SURFACE MOUNTED, SIZE MINI-MELF,	VISHAY COMPONENTS	SMM0204-2K43-1%50ppm
R26	24811/182	RESISTOR-FIXED METAL-FILM 2K43 +/- 1% 250mW 200V 50 ppm/DEG.C, SURFACE MOUNTED, SIZE MINI-MELF,	VISHAY COMPONENTS	SMM0204-2K43-1%50ppm
R27	24811/189	RESISTOR-FIXED METAL-FILM 4K75 +/- 1% 250mW 200V 50 ppm/DEG.C, SURFACE MOUNTED, SIZE MINI-MELF,	VISHAY COMPONENTS	SMM0204-4K75-1%50ppm

Cir. Ref.	MI part number	Description	Manufacturer	Manufacturer's part number
2nd & 3rd local oscillator A9/1 (contd.)				
R28	24811/189	RESISTOR-FIXED METAL-FILM 4K75 +/- 1% 250mW 200V 50 ppm/DEG.C, SURFACE MOUNTED, SIZE MINI-MELF,	VISHAY COMPONENTS	SMM0204-4K75-1%50ppm
R29	24811/165	RESISTOR-FIXED METAL-FILM 475R +/- 1% 250mW 200V 50 ppm/DEG.C, SURFACE MOUNTED, SIZE MINI-MELF,	VISHAY COMPONENTS	SMM0204-475R-1%50ppm
R30	24811/149	RESISTOR-FIXED METAL-FILM 100R +/- 1% 250mW 200V 50 ppm/DEG.C, SURFACE MOUNTED, SIZE MINI-MELF,	VISHAY COMPONENTS	SMM0204-100R-1%50ppm
R31	24811/141	RESISTOR-FIXED METAL-FILM 47R5 +/- 1% 250mW 200V 50 ppm/DEG.C, SURFACE MOUNTED, SIZE MINI-MELF,	VISHAY COMPONENTS	SMM0204-47R5-1%50ppm
R32	24811/189	RESISTOR-FIXED METAL-FILM 4K75 +/- 1% 250mW 200V 50 ppm/DEG.C, SURFACE MOUNTED, SIZE MINI-MELF,	VISHAY COMPONENTS	SMM0204-4K75-1%50ppm
R33	24811/182	RESISTOR-FIXED METAL-FILM 2K43 +/- 1% 250mW 200V 50 ppm/DEG.C, SURFACE MOUNTED, SIZE MINI-MELF,	VISHAY COMPONENTS	SMM0204-2K43-1%50ppm
R34	24321/412	RESISTOR-FIXED METAL-GLAZE 33R +/- 2% 100mW 100V 200 ppm/DEG.C, Ni-BARRIER & REFLOW HOT-DIP SOLDER,	VTM (UK) LTD	503-0-33R-1%-100ppm
R35	24811/177	RESISTOR-FIXED METAL-FILM 1K5 +/- 1% 250mW 200V 50 ppm/DEG.C, SURFACE MOUNTED, SIZE MINI-MELF, (8mm	VISHAY COMPONENTS	SMM0204-1K5-1%50ppm
R36	24811/177	RESISTOR-FIXED METAL-FILM 1K5 +/- 1% 250mW 200V 50 ppm/DEG.C, SURFACE MOUNTED, SIZE MINI-MELF, (8mm	VISHAY COMPONENTS	SMM0204-1K5-1%50ppm
R37	24811/184	RESISTOR-FIXED METAL-FILM 3K01 +/- 1% 250mW 200V 50 ppm/DEG.C, SURFACE MOUNTED, SIZE MINI-MELF,	VISHAY COMPONENTS	SMM0204-3K01-1%50ppm
R38	24811/197	RESISTOR-FIXED METAL-FILM 10K +/- 1% 250mW 200V 50 ppm/DEG.C, SURFACE MOUNTED, SIZE MINI-MELF, (8mm	VISHAY COMPONENTS	SMM0204-10K-1%50ppm
R39	24811/189	RESISTOR-FIXED METAL-FILM 4K75 +/- 1% 250mW 200V 50 ppm/DEG.C, SURFACE MOUNTED, SIZE MINI-MELF,	VISHAY COMPONENTS	SMM0204-4K75-1%50ppm
R40	24811/184	RESISTOR-FIXED METAL-FILM 3K01 +/- 1% 250mW 200V 50 ppm/DEG.C, SURFACE MOUNTED, SIZE MINI-MELF,	VISHAY COMPONENTS	SMM0204-3K01-1%50ppm
R41	24811/141	RESISTOR-FIXED METAL-FILM 47R5 +/- 1% 250mW 200V 50 ppm/DEG.C, SURFACE MOUNTED, SIZE MINI-MELF,	VISHAY COMPONENTS	SMM0204-47R5-1%50ppm
R42	24811/182	RESISTOR-FIXED METAL-FILM 2K43 +/- 1% 250mW 200V 50 ppm/DEG.C, SURFACE MOUNTED, SIZE MINI-MELF,	VISHAY COMPONENTS	SMM0204-2K43-1%50ppm
R43	24811/197	RESISTOR-FIXED METAL-FILM 10K +/- 1% 250mW 200V 50 ppm/DEG.C, SURFACE MOUNTED, SIZE MINI-MELF, (8mm	VISHAY COMPONENTS	SMM0204-10K-1%50ppm
R44	24811/201	RESISTOR-FIXED METAL-FILM 15K +/- 1% 250mW 200V 50 ppm/DEG.C, SURFACE MOUNTED, SIZE MINI-MELF, (8mm	VISHAY COMPONENTS	SMM0204-15K-1%50ppm
R45	24811/177	RESISTOR-FIXED METAL-FILM 1K5 +/- 1% 250mW 200V 50 ppm/DEG.C, SURFACE MOUNTED, SIZE MINI-MELF, (8mm	VISHAY COMPONENTS	SMM0204-1K5-1%50ppm
R46	24811/161	RESISTOR-FIXED METAL-FILM 332R +/- 1% 250mW 200V 50 ppm/DEG.C, SURFACE MOUNTED, SIZE MINI-MELF,	VISHAY COMPONENTS	SMM0204-332R-1%50ppm
R47	24811/141	RESISTOR-FIXED METAL-FILM 47R5 +/- 1% 250mW 200V 50 ppm/DEG.C, SURFACE MOUNTED, SIZE MINI-MELF,	VISHAY COMPONENTS	SMM0204-47R5-1%50ppm
R48	24811/175	RESISTOR-FIXED METAL-FILM 1K21 +/- 1% 250mW 200V 50 ppm/DEG.C, SURFACE MOUNTED, SIZE MINI-MELF,	VISHAY COMPONENTS	SMM0204-1K21-1%50ppm
R49	24811/129	RESISTOR-FIXED METAL-FILM 15R +/- 1% 250mW 200V 50 ppm/DEG.C, SURFACE MOUNTED, SIZE MINI-MELF, (8mm	VISHAY COMPONENTS	SMM0204-15R-1%-50ppm
R50	24811/153	RESISTOR-FIXED METAL-FILM 150R +/- 1% 250mW 200V 50 ppm/DEG.C, SURFACE MOUNTED, SIZE MINI-MELF,	VISHAY COMPONENTS	SMM0204-150R-1%50ppm
R51	24811/189	RESISTOR-FIXED METAL-FILM 4K75 +/- 1% 250mW 200V 50 ppm/DEG.C, SURFACE MOUNTED, SIZE MINI-MELF,	VISHAY COMPONENTS	SMM0204-4K75-1%50ppm
R52	24811/189	RESISTOR-FIXED METAL-FILM 4K75 +/- 1% 250mW 200V 50 ppm/DEG.C, SURFACE MOUNTED, SIZE MINI-MELF,	VISHAY COMPONENTS	SMM0204-4K75-1%50ppm
R53	24811/197	RESISTOR-FIXED METAL-FILM 10K +/- 1% 250mW 200V 50 ppm/DEG.C, SURFACE MOUNTED, SIZE MINI-MELF, (8mm	VISHAY COMPONENTS	SMM0204-10K-1%50ppm

Cir. Ref.	MI part number	Description	Manufacturer	Manufacturer's part number
2nd & 3rd local oscillator A9/1 (contd.)				
R54	24811/161	RESISTOR-FIXED METAL-FILM 332R +/- 1% 250mW 200V 50 ppm/DEG.C, SURFACE MOUNTED, SIZE MINI-MELF,	VISHAY COMPONENTS	SMM0204-332R-1%50ppm
R55	24811/175	RESISTOR-FIXED METAL-FILM 1K21 +/- 1% 250mW 200V 50 ppm/DEG.C, SURFACE MOUNTED, SIZE MINI-MELF,	VISHAY COMPONENTS	SMM0204-1K21-1%50ppm
R56	24811/189	RESISTOR-FIXED METAL-FILM 4K75 +/- 1% 250mW 200V 50 ppm/DEG.C, SURFACE MOUNTED, SIZE MINI-MELF,	VISHAY COMPONENTS	SMM0204-4K75-1%50ppm
R57	24811/189	RESISTOR-FIXED METAL-FILM 4K75 +/- 1% 250mW 200V 50 ppm/DEG.C, SURFACE MOUNTED, SIZE MINI-MELF,	VISHAY COMPONENTS	SMM0204-4K75-1%50ppm
R58	24811/161	RESISTOR-FIXED METAL-FILM 332R +/- 1% 250mW 200V 50 ppm/DEG.C, SURFACE MOUNTED, SIZE MINI-MELF,	VISHAY COMPONENTS	SMM0204-332R-1%50ppm
R59	24811/137	RESISTOR-FIXED METAL-FILM 33R2 +/- 1% 250mW 200V 50 ppm/DEG.C, SURFACE MOUNTED, SIZE MINI-MELF,	VISHAY COMPONENTS	SMM0204-33R2-1%50ppm
R60	24811/161	RESISTOR-FIXED METAL-FILM 332R +/- 1% 250mW 200V 50 ppm/DEG.C, SURFACE MOUNTED, SIZE MINI-MELF,	VISHAY COMPONENTS	SMM0204-332R-1%50ppm
R61	24811/168	RESISTOR-FIXED METAL-FILM 619R +/- 1% 250mW 200V 50 ppm/DEG.C, SURFACE MOUNTED, SIZE MINI-MELF,	VISHAY COMPONENTS	SMM0204-619R-1%50ppm
R62	24811/167	RESISTOR-FIXED METAL-FILM 562R +/- 1% 250mW 200V 50 ppm/DEG.C, SURFACE MOUNTED, SIZE MINI-MELF,	VISHAY COMPONENTS	SMM0204-562R-1%50ppm
R63	24811/157	RESISTOR-FIXED METAL-FILM 221R +/- 1% 250mW 200V 50 ppm/DEG.C, SURFACE MOUNTED, SIZE MINI-MELF,	VISHAY COMPONENTS	SMM0204-221R-1%50ppm
R64 to R66	24811/189	RESISTOR-FIXED METAL-FILM 4K75 +/- 1% 250mW 200V 50 ppm/DEG.C, SURFACE MOUNTED, SIZE MINI-MELF,	VISHAY COMPONENTS	SMM0204-4K75-1%50ppm
R67 to R69	24321/412	RESISTOR-FIXED METAL-GLAZE 33R +/- 2% 100mW 100V 200 ppm/DEG.C, Ni-BARRIER & REFLOW HOT-DIP SOLDER,	VTM (UK) LTD	503-0-33R-1%-100ppm
R70	24811/165	RESISTOR-FIXED METAL-FILM 475R +/- 1% 250mW 200V 50 ppm/DEG.C, SURFACE MOUNTED, SIZE MINI-MELF,	VISHAY COMPONENTS	SMM0204-475R-1%50ppm
R71	24811/185	RESISTOR-FIXED METAL-FILM 3K32 +/- 1% 250mW 200V 50 ppm/DEG.C, SURFACE MOUNTED, SIZE MINI-MELF,	VISHAY COMPONENTS	SMM0204-3K32-1%50ppm
R72	24811/185	RESISTOR-FIXED METAL-FILM 3K32 +/- 1% 250mW 200V 50 ppm/DEG.C, SURFACE MOUNTED, SIZE MINI-MELF,	VISHAY COMPONENTS	SMM0204-3K32-1%50ppm
R73	24811/167	RESISTOR-FIXED METAL-FILM 562R +/- 1% 250mW 200V 50 ppm/DEG.C, SURFACE MOUNTED, SIZE MINI-MELF,	VISHAY COMPONENTS	SMM0204-562R-1%50ppm
R74	24811/177	RESISTOR-FIXED METAL-FILM 1K5 +/- 1% 250mW 200V 50 ppm/DEG.C, SURFACE MOUNTED, SIZE MINI-MELF, (8mm	VISHAY COMPONENTS	SMM0204-1K5-1%50ppm
R75	24811/165	RESISTOR-FIXED METAL-FILM 475R +/- 1% 250mW 200V 50 ppm/DEG.C, SURFACE MOUNTED, SIZE MINI-MELF,	VISHAY COMPONENTS	SMM0204-475R-1%50ppm
R76	24811/168	RESISTOR-FIXED METAL-FILM 619R +/- 1% 250mW 200V 50 ppm/DEG.C, SURFACE MOUNTED, SIZE MINI-MELF,	VISHAY COMPONENTS	SMM0204-619R-1%50ppm
R77	24811/167	RESISTOR-FIXED METAL-FILM 562R +/- 1% 250mW 200V 50 ppm/DEG.C, SURFACE MOUNTED, SIZE MINI-MELF,	VISHAY COMPONENTS	SMM0204-562R-1%50ppm
R78	24811/182	RESISTOR-FIXED METAL-FILM 2K43 +/- 1% 250mW 200V 50 ppm/DEG.C, SURFACE MOUNTED, SIZE MINI-MELF,	VISHAY COMPONENTS	SMM0204-2K43-1%50ppm
R80	24811/165	RESISTOR-FIXED METAL-FILM 475R +/- 1% 250mW 200V 50 ppm/DEG.C, SURFACE MOUNTED, SIZE MINI-MELF,	VISHAY COMPONENTS	SMM0204-475R-1%50ppm
R81	24811/137	RESISTOR-FIXED METAL-FILM 33R2 +/- 1% 250mW 200V 50 ppm/DEG.C, SURFACE MOUNTED, SIZE MINI-MELF,	VISHAY COMPONENTS	SMM0204-33R2-1%50ppm
R82	24811/197	RESISTOR-FIXED METAL-FILM 10K +/- 1% 250mW 200V 50 ppm/DEG.C, SURFACE MOUNTED, SIZE MINI-MELF, (8mm	VISHAY COMPONENTS	SMM0204-10K-1%50ppm
R83	24811/165	RESISTOR-FIXED METAL-FILM 475R +/- 1% 250mW 200V 50 ppm/DEG.C, SURFACE MOUNTED, SIZE MINI-MELF,	VISHAY COMPONENTS	SMM0204-475R-1%50ppm
R84	24811/141	RESISTOR-FIXED METAL-FILM 47R5 +/- 1% 250mW 200V 50 ppm/DEG.C, SURFACE MOUNTED, SIZE MINI-MELF,	VISHAY COMPONENTS	SMM0204-47R5-1%50ppm

Clr. Ref.	MI part number	Description	Manufacturer	Manufacturer's part number
2nd & 3rd local oscillator A9/1 (contd.)				
R85	24811/185	RESISTOR-FIXED METAL-FILM 3K32 +/- 1% 250mW 200V 50 ppm/DEG.C, SURFACE MOUNTED, SIZE MINI-MELF,	VISHAY COMPONENTS	SMM0204-3K32-1%50ppm
R86	24811/189	RESISTOR-FIXED METAL-FILM 4K75 +/- 1% 250mW 200V 50 ppm/DEG.C, SURFACE MOUNTED, SIZE MINI-MELF,	VISHAY COMPONENTS	SMM0204-4K75-1%50ppm
R87	24811/137	RESISTOR-FIXED METAL-FILM 33R2 +/- 1% 250mW 200V 50 ppm/DEG.C, SURFACE MOUNTED, SIZE MINI-MELF,	VISHAY COMPONENTS	SMM0204-33R2-1%50ppm
R88	24811/161	RESISTOR-FIXED METAL-FILM 332R +/- 1% 250mW 200V 50 ppm/DEG.C, SURFACE MOUNTED, SIZE MINI-MELF,	VISHAY COMPONENTS	SMM0204-332R-1%50ppm
R89	24811/137	RESISTOR-FIXED METAL-FILM 33R2 +/- 1% 250mW 200V 50 ppm/DEG.C, SURFACE MOUNTED, SIZE MINI-MELF,	VISHAY COMPONENTS	SMM0204-33R2-1%50ppm
R90	24811/171	RESISTOR-FIXED METAL-FILM 825R +/- 1% 250mW 200V 50 ppm/DEG.C, SURFACE MOUNTED, SIZE MINI-MELF,	VISHAY COMPONENTS	SMM0204-825R-1%50ppm
R91	24811/189	RESISTOR-FIXED METAL-FILM 4K75 +/- 1% 250mW 200V 50 ppm/DEG.C, SURFACE MOUNTED, SIZE MINI-MELF,	VISHAY COMPONENTS	SMM0204-4K75-1%50ppm
R92	24811/182	RESISTOR-FIXED METAL-FILM 2K43 +/- 1% 250mW 200V 50 ppm/DEG.C, SURFACE MOUNTED, SIZE MINI-MELF,	VISHAY COMPONENTS	SMM0204-2K43-1%50ppm
R93	24811/182	RESISTOR-FIXED METAL-FILM 2K43 +/- 1% 250mW 200V 50 ppm/DEG.C, SURFACE MOUNTED, SIZE MINI-MELF,	VISHAY COMPONENTS	SMM0204-2K43-1%50ppm
R94	24811/189	RESISTOR-FIXED METAL-FILM 4K75 +/- 1% 250mW 200V 50 ppm/DEG.C, SURFACE MOUNTED, SIZE MINI-MELF,	VISHAY COMPONENTS	SMM0204-4K75-1%50ppm
R95	24811/189	RESISTOR-FIXED METAL-FILM 4K75 +/- 1% 250mW 200V 50 ppm/DEG.C, SURFACE MOUNTED, SIZE MINI-MELF,	VISHAY COMPONENTS	SMM0204-4K75-1%50ppm
R96	24811/165	RESISTOR-FIXED METAL-FILM 475R +/- 1% 250mW 200V 50 ppm/DEG.C, SURFACE MOUNTED, SIZE MINI-MELF,	VISHAY COMPONENTS	SMM0204-475R-1%50ppm
R97	24811/175	RESISTOR-FIXED METAL-FILM 1K21 +/- 1% 250mW 200V 50 ppm/DEG.C, SURFACE MOUNTED, SIZE MINI-MELF,	VISHAY COMPONENTS	SMM0204-1K21-1%50ppm
R98	24811/175	RESISTOR-FIXED METAL-FILM 1K21 +/- 1% 250mW 200V 50 ppm/DEG.C, SURFACE MOUNTED, SIZE MINI-MELF,	VISHAY COMPONENTS	SMM0204-1K21-1%50ppm
R99	24811/189	RESISTOR-FIXED METAL-FILM 4K75 +/- 1% 250mW 200V 50 ppm/DEG.C, SURFACE MOUNTED, SIZE MINI-MELF,	VISHAY COMPONENTS	SMM0204-4K75-1%50ppm
R100	24811/189	RESISTOR-FIXED METAL-FILM 4K75 +/- 1% 250mW 200V 50 ppm/DEG.C, SURFACE MOUNTED, SIZE MINI-MELF,	VISHAY COMPONENTS	SMM0204-4K75-1%50ppm
R101	24811/125	RESISTOR-FIXED METAL-FILM 10R +/- 1% 250mW 200V 50 ppm/DEG.C, SURFACE MOUNTED, SIZE MINI-MELF, (8mm	VISHAY COMPONENTS	SMM0204-10R-1%-50ppm
R102	24811/171	RESISTOR-FIXED METAL-FILM 825R +/- 1% 250mW 200V 50 ppm/DEG.C, SURFACE MOUNTED, SIZE MINI-MELF,	VISHAY COMPONENTS	SMM0204-825R-1%50ppm
R103	24811/125	RESISTOR-FIXED METAL-FILM 10R +/- 1% 250mW 200V 50 ppm/DEG.C, SURFACE MOUNTED, SIZE MINI-MELF, (8mm	VISHAY COMPONENTS	SMM0204-10R-1%-50ppm
SKK	23435/990	CONNECTOR SHORTING, SOCKET, 2 WAY, FOR 0.64mm SQ PINS, 2.54mm PITCH, 9.6mm HIGH, FREE MOUNTING,	BERG ELECTRONICS	65474-001
SKM	23435/990	CONNECTOR SHORTING, SOCKET, 2 WAY, FOR 0.64mm SQ PINS, 2.54mm PITCH, 9.6mm HIGH, FREE MOUNTING,	BERG ELECTRONICS	65474-001
TR1	28487/809	TRANSISTOR NPN BIPOLAR BFR93A... 12V 5GHz 250mW 35mA 40hFE MIN @ 30mA, MARKING CODE R2, SURFACE	PHILIPS	BFR93A
TR2	28457/858	TRANSISTOR PNP BIPOLAR BSR12... 15V 1.5GHz 250mW 100mA 30hFE @ 10mA, ON-20nS OFF-30nS, MARKING CODE	PHILIPS	BSR12
TR3 to TR12	28457/851	TRANSISTOR NPN BIPOLAR BFS17... 15V 1.3GHz 250mW 50mA 20hFE MIN @ 2mA, MARKING CODE E1, SURFACE	PHILIPS	BFS17

Cir. Ref.	MI part number	Description	Manufacturer	Manufacturer's part number
2nd & 3rd local oscillator A9/1 (contd.)				
TR13	28457/858	TRANSISTOR PNP BIPOLAR BSR12... 15V 1.5GHz 250mW 100mA 30hFE @ 10mA, ON-20nS OFF-30nS, MARKING CODE	PHILIPS	BSR12
TR14	28457/851	TRANSISTOR NPN BIPOLAR BFS17... 15V 1.3GHz 250mW 50mA 20hFE MIN @ 2mA, MARKING CODE E1, SURFACE	PHILIPS	BFS17
XL1	28312/144	FILTER CRYSTAL, PCB-MOUNT, 10.7MHz, 3dB PASSBAND 7.5kHz, 40dB STOPBAND 25kHz, 4 POLES, 2.5dB MAX	ECM ELECTRONICS LTD	F10M15B

Cir. Ref.	MI part number	Description	Manufacturer	Manufacturer's part number

2nd and 3rd local oscillator control A10

When ordering, prefix circuit reference with A10.

	44829-930	Complete unit	Issue 009	
C1	26386/899	CAPACITOR-FIXED CERAMIC 100nF +/-10% 50V X7R/2C1, MULTILAYER, SURFACE-MOUNTED, SIZE 1206, NICKEL	ROHM ELECTRONICS LTD	MCH31-5C-104-KP
C2	26386/863	CAPACITOR-FIXED CERAMIC 1nF +/-10% 50V X7R/2C1, MULTILAYER, SURFACE-MOUNTED, SIZE 0805, NICKEL	ROHM ELECTRONICS LTD	MCH21-5C-102-KP
C3	26343/494	CAPACITOR-FIXED CERAMIC 33pF +/-2% 63V N150 SINGLELAYER, RADIAL, 2.5mm PWP, (TAPED).	VISHAY COMPONENTS	ROP-330-GAK-ACR-J
C4	26343/434	CAPACITOR-FIXED CERAMIC 68pF +/-2% 63V N150 SINGLELAYER, RADIAL, 2.5mm PWP, (TAPED).	VISHAY COMPONENTS	ROP-680-GAK-ACR-J
C5	26386/899	CAPACITOR-FIXED CERAMIC 100nF +/-10% 50V X7R/2C1, MULTILAYER, SURFACE-MOUNTED, SIZE 1206, NICKEL	ROHM ELECTRONICS LTD	MCH31-5C-104-KP
C6 to C15	26386/863	CAPACITOR-FIXED CERAMIC 1nF +/-10% 50V X7R/2C1, MULTILAYER, SURFACE-MOUNTED, SIZE 0805, NICKEL	ROHM ELECTRONICS LTD	MCH21-5C-102-KP
C16	26451/003	CAPACITOR-FIXED ALUMINIUM 10uF +/-20% 16V ELECTROLYTIC, SURFACE-MOUNTED, SIZE 4.3 x 4.3mm,	PANASONIC INDUSTRIAL	ECE-V-1CA-100R
C18	26451/003	CAPACITOR-FIXED ALUMINIUM 10uF +/-20% 16V ELECTROLYTIC, SURFACE-MOUNTED, SIZE 4.3 x 4.3mm,	PANASONIC INDUSTRIAL	ECE-V-1CA-100R
C19	26386/804	CAPACITOR-FIXED CERAMIC 2.2pF +/-0.5pF 50V NPO MULTILAYER, SURFACE-MOUNTED, SIZE 0805, NICKEL	ROHM ELECTRONICS LTD	MCH21-5A-2R2-DP
C20	26386/804	CAPACITOR-FIXED CERAMIC 2.2pF +/-0.5pF 50V NPO MULTILAYER, SURFACE-MOUNTED, SIZE 0805, NICKEL	ROHM ELECTRONICS LTD	MCH21-5A-2R2-DP
C22	26386/899	CAPACITOR-FIXED CERAMIC 100nF +/-10% 50V X7R/2C1, MULTILAYER, SURFACE-MOUNTED, SIZE 1206, NICKEL	ROHM ELECTRONICS LTD	MCH31-5C-104-KP
C25 to C28	26386/863	CAPACITOR-FIXED CERAMIC 1nF +/-10% 50V X7R/2C1, MULTILAYER, SURFACE-MOUNTED, SIZE 0805, NICKEL	ROHM ELECTRONICS LTD	MCH21-5C-102-KP
C29	26386/875	CAPACITOR-FIXED CERAMIC 10nF +/-10% 50V X7R/2C1, MULTILAYER, SURFACE-MOUNTED, SIZE 0805, NICKEL	ROHM ELECTRONICS LTD	MCH21-5C-103-KP
C30	26386/867	CAPACITOR-FIXED CERAMIC 2.2nF +/-10% 50V X7R/2C1, MULTILAYER, SURFACE-MOUNTED, SIZE 0805, NICKEL	ROHM ELECTRONICS LTD	MCH21-5C-222-KP
C31	26343/430	CAPACITOR-FIXED CERAMIC 39pF +/-2% 63V N150 SINGLELAYER, RADIAL, 2.5mm PWP, (TAPED).	VISHAY COMPONENTS	ROP-390-GAK-ACR-J
C34	26386/824	CAPACITOR-FIXED CERAMIC 100pF +/-5% 50V NP0 MULTILAYER, SURFACE-MOUNTED, SIZE 0805, NICKEL	ROHM ELECTRONICS LTD	MCH21-5A-101-JP
C36	26343/499	CAPACITOR-FIXED CERAMIC 27pF +/-2% 63V N150 SINGLELAYER, RADIAL, 2.5mm PWP, (TAPED).	VISHAY COMPONENTS	ROP-270-GAK-ACR-J
C38	26451/009	CAPACITOR-FIXED ALUMINIUM 47uF +/-20% 16V ELECTROLYTIC, SURFACE-MOUNTED, SIZE 6.6 x 6.6mm,	PANASONIC INDUSTRIAL	ECE-V-1CA-470P
C39	26451/009	CAPACITOR-FIXED ALUMINIUM 47uF +/-20% 16V ELECTROLYTIC, SURFACE-MOUNTED, SIZE 6.6 x 6.6mm,	PANASONIC INDUSTRIAL	ECE-V-1CA-470P
D1	28381/341	DIODE VARIABLE CAPACITNCE, BBY40... 350mW 28V 20mA 4.3pF @ 25V, CAPAC RATIO 5.0 MIN, MARKING CODE S2,	PHILIPS	BBY40
D2	28371/302	DIODE ZENER, BZX84-C4V7... 250mW 4.7V 5% 250mA MARKING CODE Z1, SURFACE MOUNTED, SOT-23, (8mm	PHILIPS	BZX84-C4V7
D3	28371/302	DIODE ZENER, BZX84-C4V7... 250mW 4.7V 5% 250mA MARKING CODE Z1, SURFACE MOUNTED, SOT-23, (8mm	PHILIPS	BZX84-C4V7

2nd & 3rd local oscillator control A10 (contd.)

Cir. Ref.	MI part number	Description	Manufacturer	Manufacturer's part number
IC1	28461/470	IC-ANALOGUE OPERATIONAL AMP AD827... DUAL, 15V UNITY BANDWIDTH 50MHz, SLEW RATE 200V/uS, I/P	ANALOG DEVICES LTD	AD827JN
IC2	28531/021B	RF-MIXER DOUBLE-BALANCED, SL6440C... 150MHz MAX, 15 dBm RF-1dB COMPRESS, +30dBm INTERCEPT,		
IC3	28461/029	IC-ANALOGUE SWITCH DG211... QUAD, 15V SPST, ON-RESISTANCE <175R, TTL COMPATIBLE, CMOS, 16 PIN,	ANALOG DEVICES LTD	ADG211AKR
L1	23642/937	INDUCTOR-VARIABLE 0.11uH NOM, UNSCREENED, 2 PIN, 10mm SQUARE PCB MOUNT BASE, Q>215 @ 100MHz,	TOKO (UK) LTD	E526HN-100117
L2	23642/533	INDUCTOR-FIXED 10uH +/- 5% EPOXY-MOULD, 150mA 2R1 MAX, 30 Q @ 2.52 MHz, 36 MHz SRF, SURFACE MOUNTED,	MEGGITT ELECTRONICS	3612-T-100-J
L3	23642/533	INDUCTOR-FIXED 10uH +/- 5% EPOXY-MOULD, 150mA 2R1 MAX, 30 Q @ 2.52 MHz, 36 MHz SRF, SURFACE MOUNTED,	MEGGITT ELECTRONICS	3612-T-100-J
L5	23642/512	INDUCTOR-FIXED 22uH +/- 5% EPOXY-MOULD, 110mA 3R7 MAX, 30 Q @ 2.5 MHz, 25 MHz SRF, SURFACE MOUNTED,	MEGGITT ELECTRONICS	3612-T-220-J
L6	23642/512	INDUCTOR-FIXED 22uH +/- 5% EPOXY-MOULD, 110mA 3R7 MAX, 30 Q @ 2.5 MHz, 25 MHz SRF, SURFACE MOUNTED,	MEGGITT ELECTRONICS	3612-T-220-J
R1	24811/191	RESISTOR-FIXED METAL-FILM 5K62 +/- 1% 250mW 200V 50 ppm/DEG.C, SURFACE MOUNTED, SIZE MINI-MELF,	VISHAY COMPONENTS	SMM0204-5K62-1%50ppm
R3	24811/197	RESISTOR-FIXED METAL-FILM 10K +/- 1% 250mW 200V 50 ppm/DEG.C, SURFACE MOUNTED, SIZE MINI-MELF, (8mm	VISHAY COMPONENTS	SMM0204-10K-1%50ppm
R4	24811/197	RESISTOR-FIXED METAL-FILM 10K +/- 1% 250mW 200V 50 ppm/DEG.C, SURFACE MOUNTED, SIZE MINI-MELF, (8mm	VISHAY COMPONENTS	SMM0204-10K-1%50ppm
R5	24811/190	RESISTOR-FIXED METAL-FILM 5K11 +/- 1% 250mW 200V 50 ppm/DEG.C, SURFACE MOUNTED, SIZE MINI-MELF,	VISHAY COMPONENTS	SMM0204-5K11-1%50ppm
R6	24811/201	RESISTOR-FIXED METAL-FILM 15K +/- 1% 250mW 200V 50 ppm/DEG.C, SURFACE MOUNTED, SIZE MINI-MELF, (8mm	VISHAY COMPONENTS	SMM0204-15K-1%50ppm
R7	24811/191	RESISTOR-FIXED METAL-FILM 5K62 +/- 1% 250mW 200V 50 ppm/DEG.C, SURFACE MOUNTED, SIZE MINI-MELF,	VISHAY COMPONENTS	SMM0204-5K62-1%50ppm
R8	24811/165	RESISTOR-FIXED METAL-FILM 475R +/- 1% 250mW 200V 50 ppm/DEG.C, SURFACE MOUNTED, SIZE MINI-MELF,	VISHAY COMPONENTS	SMM0204-475R-1%50ppm
R10	24811/149	RESISTOR-FIXED METAL-FILM 100R +/- 1% 250mW 200V 50 ppm/DEG.C, SURFACE MOUNTED, SIZE MINI-MELF,	VISHAY COMPONENTS	SMM0204-100R-1%50ppm
R11	24811/165	RESISTOR-FIXED METAL-FILM 475R +/- 1% 250mW 200V 50 ppm/DEG.C, SURFACE MOUNTED, SIZE MINI-MELF,	VISHAY COMPONENTS	SMM0204-475R-1%50ppm
R12	24811/149	RESISTOR-FIXED METAL-FILM 100R +/- 1% 250mW 200V 50 ppm/DEG.C, SURFACE MOUNTED, SIZE MINI-MELF,	VISHAY COMPONENTS	SMM0204-100R-1%50ppm
R13	24811/165	RESISTOR-FIXED METAL-FILM 475R +/- 1% 250mW 200V 50 ppm/DEG.C, SURFACE MOUNTED, SIZE MINI-MELF,	VISHAY COMPONENTS	SMM0204-475R-1%50ppm
R14	24811/170	RESISTOR-FIXED METAL-FILM 750R +/- 1% 250mW 200V 50 ppm/DEG.C, SURFACE MOUNTED, SIZE MINI-MELF,	VISHAY COMPONENTS	SMM0204-750R-1%50ppm
R15	24811/149	RESISTOR-FIXED METAL-FILM 100R +/- 1% 250mW 200V 50 ppm/DEG.C, SURFACE MOUNTED, SIZE MINI-MELF,	VISHAY COMPONENTS	SMM0204-100R-1%50ppm
R16	24811/173	RESISTOR-FIXED METAL-FILM 1K +/- 1% 250mW 200V 50 ppm/DEG.C, SURFACE MOUNTED, SIZE MINI-MELF, (8mm	VISHAY COMPONENTS	SMM0204-1K0-1%-50ppm
R17 to R20	24811/165	RESISTOR-FIXED METAL-FILM 475R +/- 1% 250mW 200V 50 ppm/DEG.C, SURFACE MOUNTED, SIZE MINI-MELF,	VISHAY COMPONENTS	SMM0204-475R-1%50ppm
R21	24811/181	RESISTOR-FIXED METAL-FILM 2K21 +/- 1% 250mW 200V 50 ppm/DEG.C, SURFACE MOUNTED, SIZE MINI-MELF,	VISHAY COMPONENTS	SMM0204-2K21-1%50ppm

Cir. Ref.	MI part number	Description	Manufacturer	Manufacturer's part number
2nd & 3rd local oscillator control A10 (contd.)				
R22	24811/149	RESISTOR-FIXED METAL-FILM 100R +/- 1% 250mW 200V 50 ppm/DEG.C, SURFACE MOUNTED, SIZE MINI-MELF,	VISHAY COMPONENTS	SMM0204-100R-1%50ppm
R23	24811/173	RESISTOR-FIXED METAL-FILM 1K +/- 1% 250mW 200V 50 ppm/DEG.C, SURFACE MOUNTED, SIZE MINI-MELF, (8mm	VISHAY COMPONENTS	SMM0204-1K0-1%-50ppm
R24	24811/169	RESISTOR-FIXED METAL-FILM 681R +/- 1% 250mW 200V 50 ppm/DEG.C, SURFACE MOUNTED, SIZE MINI-MELF,	VISHAY COMPONENTS	SMM0204-681R-1%50ppm
R25	24811/125	RESISTOR-FIXED METAL-FILM 10R +/- 1% 250mW 200V 50 ppm/DEG.C, SURFACE MOUNTED, SIZE MINI-MELF, (8mm	VISHAY COMPONENTS	SMM0204-10R-1%-50ppm
R26	24811/173	RESISTOR-FIXED METAL-FILM 1K +/- 1% 250mW 200V 50 ppm/DEG.C, SURFACE MOUNTED, SIZE MINI-MELF, (8mm	VISHAY COMPONENTS	SMM0204-1K0-1%-50ppm
R27	24811/168	RESISTOR-FIXED METAL-FILM 619R +/- 1% 250mW 200V 50 ppm/DEG.C, SURFACE MOUNTED, SIZE MINI-MELF,	VISHAY COMPONENTS	SMM0204-619R-1%50ppm
R28	24811/169	RESISTOR-FIXED METAL-FILM 681R +/- 1% 250mW 200V 50 ppm/DEG.C, SURFACE MOUNTED, SIZE MINI-MELF,	VISHAY COMPONENTS	SMM0204-681R-1%50ppm
R33	24811/177	RESISTOR-FIXED METAL-FILM 1K5 +/- 1% 250mW 200V 50 ppm/DEG.C, SURFACE MOUNTED, SIZE MINI-MELF, (8mm	VISHAY COMPONENTS	SMM0204-1K5-1%50ppm
R34	24811/149	RESISTOR-FIXED METAL-FILM 100R +/- 1% 250mW 200V 50 ppm/DEG.C, SURFACE MOUNTED, SIZE MINI-MELF,	VISHAY COMPONENTS	SMM0204-100R-1%50ppm
R35	24811/194	RESISTOR-FIXED METAL-FILM 7K5 +/- 1% 250mW 200V 50 ppm/DEG.C, SURFACE MOUNTED, SIZE MINI-MELF, (8mm	VISHAY COMPONENTS	SMM0204-7K5-1%50ppm
R36	24811/194	RESISTOR-FIXED METAL-FILM 7K5 +/- 1% 250mW 200V 50 ppm/DEG.C, SURFACE MOUNTED, SIZE MINI-MELF, (8mm	VISHAY COMPONENTS	SMM0204-7K5-1%50ppm
R37	24811/149	RESISTOR-FIXED METAL-FILM 100R +/- 1% 250mW 200V 50 ppm/DEG.C, SURFACE MOUNTED, SIZE MINI-MELF,	VISHAY COMPONENTS	SMM0204-100R-1%50ppm
R38	24811/141	RESISTOR-FIXED METAL-FILM 47R5 +/- 1% 250mW 200V 50 ppm/DEG.C, SURFACE MOUNTED, SIZE MINI-MELF,	VISHAY COMPONENTS	SMM0204-47R5-1%50ppm
R39	24811/173	RESISTOR-FIXED METAL-FILM 1K +/- 1% 250mW 200V 50 ppm/DEG.C, SURFACE MOUNTED, SIZE MINI-MELF, (8mm	VISHAY COMPONENTS	SMM0204-1K0-1%-50ppm
R40	24811/157	RESISTOR-FIXED METAL-FILM 221R +/- 1% 250mW 200V 50 ppm/DEG.C, SURFACE MOUNTED, SIZE MINI-MELF,	VISHAY COMPONENTS	SMM0204-221R-1%50ppm
R41	24811/165	RESISTOR-FIXED METAL-FILM 475R +/- 1% 250mW 200V 50 ppm/DEG.C, SURFACE MOUNTED, SIZE MINI-MELF,	VISHAY COMPONENTS	SMM0204-475R-1%50ppm
R42	24811/181	RESISTOR-FIXED METAL-FILM 2K21 +/- 1% 250mW 200V 50 ppm/DEG.C, SURFACE MOUNTED, SIZE MINI-MELF,	VISHAY COMPONENTS	SMM0204-2K21-1%50ppm
R43	24811/149	RESISTOR-FIXED METAL-FILM 100R +/- 1% 250mW 200V 50 ppm/DEG.C, SURFACE MOUNTED, SIZE MINI-MELF,	VISHAY COMPONENTS	SMM0204-100R-1%50ppm
R44	24811/173	RESISTOR-FIXED METAL-FILM 1K +/- 1% 250mW 200V 50 ppm/DEG.C, SURFACE MOUNTED, SIZE MINI-MELF, (8mm	VISHAY COMPONENTS	SMM0204-1K0-1%-50ppm
TR1	28457/851	TRANSISTOR NPN BIPOLAR BFS17... 15V 1.3GHz 250mW 50mA 20hFE MIN @ 2mA, MARKING CODE E1, SURFACE	PHILIPS	BFS17
TR2	28487/817	TRANSISTOR PNP BIPOLAR BF569... 35V 900MHz 200mW 30mA 25hFE MIN @ 3mA, MARKING CODE G6 OR LH,	PHILIPS	BF569
TR3	28487/817	TRANSISTOR PNP BIPOLAR BF569... 35V 900MHz 200mW 30mA 25hFE MIN @ 3mA, MARKING CODE G6 OR LH,	PHILIPS	BF569
TR4	28457/851	TRANSISTOR NPN BIPOLAR BFS17... 15V 1.3GHz 250mW 50mA 20hFE MIN @ 2mA, MARKING CODE E1, SURFACE	PHILIPS	BFS17
TR5	28457/851	TRANSISTOR NPN BIPOLAR BFS17... 15V 1.3GHz 250mW 50mA 20hFE MIN @ 2mA, MARKING CODE E1, SURFACE	PHILIPS	BFS17

Cir. Ref.	MI part number	Description	Manufacturer	Manufacturer's part number

Input/output switching board A11/1

When ordering, prefix circuit reference with A11/1.

	44830-163	Complete unit	Issue 001	
C1 to C5	26386/899	CAPACITOR-FIXED CERAMIC 100nF +/-10% 50V X7R/2C1, MULTILAYER, SURFACE-MOUNTED, SIZE 1206, NICKEL	ROHM ELECTRONICS LTD	MCH31-5C-104-KP
C7	26386/875	CAPACITOR-FIXED CERAMIC 10nF +/-10% 50V X7R/2C1, MULTILAYER, SURFACE-MOUNTED, SIZE 0805, NICKEL	ROHM ELECTRONICS LTD	MCH21-5C-103-KP
C9	26386/760	CAPACITOR-FIXED CERAMIC 220nF +/-10% 50V X7R MULTILAYER, SURFACE-MOUNTED, SIZE 1210, NICKEL	PHILIPS	1210-2R-224-K9-BBC
C10	26386/760	CAPACITOR-FIXED CERAMIC 220nF +/-10% 50V X7R MULTILAYER, SURFACE-MOUNTED, SIZE 1210, NICKEL	PHILIPS	1210-2R-224-K9-BBC
C11	26386/875	CAPACITOR-FIXED CERAMIC 10nF +/-10% 50V X7R/2C1, MULTILAYER, SURFACE-MOUNTED, SIZE 0805, NICKEL	ROHM ELECTRONICS LTD	MCH21-5C-103-KP
C12 to C16	26386/899	CAPACITOR-FIXED CERAMIC 100nF +/-10% 50V X7R/2C1, MULTILAYER, SURFACE-MOUNTED, SIZE 1206, NICKEL	ROHM ELECTRONICS LTD	MCH31-5C-104-KP
C17	26386/863	CAPACITOR-FIXED CERAMIC 1nF +/-10% 50V X7R/2C1, MULTILAYER, SURFACE-MOUNTED, SIZE 0805, NICKEL	ROHM ELECTRONICS LTD	MCH21-5C-102-KP
C18	26386/863	CAPACITOR-FIXED CERAMIC 1nF +/-10% 50V X7R/2C1, MULTILAYER, SURFACE-MOUNTED, SIZE 0805, NICKEL	ROHM ELECTRONICS LTD	MCH21-5C-102-KP
C19	26386/899	CAPACITOR-FIXED CERAMIC 100nF +/-10% 50V X7R/2C1, MULTILAYER, SURFACE-MOUNTED, SIZE 1206, NICKEL	ROHM ELECTRONICS LTD	MCH31-5C-104-KP
C20	26386/760	CAPACITOR-FIXED CERAMIC 220nF +/-10% 50V X7R MULTILAYER, SURFACE-MOUNTED, SIZE 1210, NICKEL	PHILIPS	1210-2R-224-K9-BBC
C21	26386/899	CAPACITOR-FIXED CERAMIC 100nF +/-10% 50V X7R/2C1, MULTILAYER, SURFACE-MOUNTED, SIZE 1206, NICKEL	ROHM ELECTRONICS LTD	MCH31-5C-104-KP
C22	26386/899	CAPACITOR-FIXED CERAMIC 100nF +/-10% 50V X7R/2C1, MULTILAYER, SURFACE-MOUNTED, SIZE 1206, NICKEL	ROHM ELECTRONICS LTD	MCH31-5C-104-KP
C23	26451/003	CAPACITOR-FIXED ALUMINIUM 10uF +/-20% 16V ELECTROLYTIC, SURFACE-MOUNTED, SIZE 4.3 x 4.3mm,	PANASONIC INDUSTRIAL	ECE-V-1CA-100R
C24	26451/014	CAPACITOR-FIXED ALUMINIUM 220uF +/-20% 16V ELECTROLYTIC, SURFACE-MOUNTED, SIZE 10.3 x 10.3mm,	PANASONIC INDUSTRIAL	ECE-V-1E-A-221-P
C25	26386/899	CAPACITOR-FIXED CERAMIC 100nF +/-10% 50V X7R/2C1, MULTILAYER, SURFACE-MOUNTED, SIZE 1206, NICKEL	ROHM ELECTRONICS LTD	MCH31-5C-104-KP
C26	26386/760	CAPACITOR-FIXED CERAMIC 220nF +/-10% 50V X7R MULTILAYER, SURFACE-MOUNTED, SIZE 1210, NICKEL	PHILIPS	1210-2R-224-K9-BBC
C27	26451/008	CAPACITOR-FIXED ALUMINIUM 47uF +/-20% 6.3V ELECTROLYTIC, SURFACE-MOUNTED, SIZE 5.3 x 5.3mm,	PANASONIC INDUSTRIAL	ECE-V-0JA-470P
C28	26386/875	CAPACITOR-FIXED CERAMIC 10nF +/-10% 50V X7R/2C1, MULTILAYER, SURFACE-MOUNTED, SIZE 0805, NICKEL	ROHM ELECTRONICS LTD	MCH21-5C-103-KP
C30 to C35	26386/863	CAPACITOR-FIXED CERAMIC 1nF +/-10% 50V X7R/2C1, MULTILAYER, SURFACE-MOUNTED, SIZE 0805, NICKEL	ROHM ELECTRONICS LTD	MCH21-5C-102-KP
C43	26386/875	CAPACITOR-FIXED CERAMIC 10nF +/-10% 50V X7R/2C1, MULTILAYER, SURFACE-MOUNTED, SIZE 0805, NICKEL	ROHM ELECTRONICS LTD	MCH21-5C-103-KP
C44	26386/875	CAPACITOR-FIXED CERAMIC 10nF +/-10% 50V X7R/2C1, MULTILAYER, SURFACE-MOUNTED, SIZE 0805, NICKEL	ROHM ELECTRONICS LTD	MCH21-5C-103-KP
C49	26386/863	CAPACITOR-FIXED CERAMIC 1nF +/-10% 50V X7R/2C1, MULTILAYER, SURFACE-MOUNTED, SIZE 0805, NICKEL	ROHM ELECTRONICS LTD	MCH21-5C-102-KP
C50	26386/863	CAPACITOR-FIXED CERAMIC 1nF +/-10% 50V X7R/2C1, MULTILAYER, SURFACE-MOUNTED, SIZE 0805, NICKEL	ROHM ELECTRONICS LTD	MCH21-5C-102-KP

Cir. Ref.	MI part number	Description	Manufacturer	Manufacturer's part number
Input/output switching board A11/1 (contd.)				
C51 to C60	26386/830	CAPACITOR-FIXED CERAMIC 330pF +/-5% 50V NP0 MULTILAYER, SURFACE-MOUNTED, SIZE 0805, NICKEL	ROHM ELECTRONICS LTD	MCH21-5A-331-JP
D7	28383/903	DIODE SMALL-SIGNAL, BAV99... DUAL, 70V 100mA 1.1Vf @ 50mA, IN SERIES, MARKING CODE A7, SURFACE	PHILIPS	BAV99 (A7)
D8	28349/030	DIODE SMALL-SIGNAL, SCHOTTKY, BAS85... 30V 200mA 10pF 0.4Vf @ 10mA, GREY BAND MARK, SURFACE	PHILIPS	BAS85
D9	28371/443	DIODE ZENER, BZX84-C5V6... 250mW 5.6V 5% 250mA MARKING CODE Z3, SURFACE MOUNTED, SOT-23, (8mm	PHILIPS	BZX84-C5V6
D10	28383/939	DIODE MIXER/DETECTOR, SCHOTTKY, BAT63... DUAL, 3V 100mA 0.65pF 0.19V @1mA, ELEC ISOLATD, MARKNG CODE	SIEMENS LTD	BAT63 (TAPED)
D12	28349/022	DIODE SMALL-SIGNAL, SCHOTTKY, HSMS-2812... DUAL, 20V 1.2pF 410mVf @ 1mA, IN SERIES, MARKING CODE	HEWLETT-PACKARD	HSMS-2812-L31
D13	28383/909	DIODE SMALL-SIGNAL, SCHOTTKY, HSMS-2822... DUAL, 8V 1pF 340mVf @ 1mA, IN SERIES, MARKING CODE C2,	HEWLETT-PACKARD	HSMS-2822-L31
D16	28349/022	DIODE SMALL-SIGNAL, SCHOTTKY, HSMS-2812... DUAL, 20V 1.2pF 410mVf @ 1mA, IN SERIES, MARKING CODE	HEWLETT-PACKARD	HSMS-2812-L31
D18	28383/909	DIODE SMALL-SIGNAL, SCHOTTKY, HSMS-2822... DUAL, 8V 1pF 340mVf @ 1mA, IN SERIES, MARKING CODE C2,	HEWLETT-PACKARD	HSMS-2822-L31
D20	28371/302	DIODE ZENER, BZX84-C4V7... 250mW 4.7V 5% 250mA MARKING CODE Z1, SURFACE MOUNTED, SOT-23, (8mm	PHILIPS	BZX84-C4V7
D21 to D24	28383/930	DIODE SMALL-SIGNAL, BAS16... 330mW 75V 250mA 2pF 1Vf @ 50mA, MARKING CODE A6, SURFACE MOUNTED,	PHILIPS	BAS16
IC1	28461/809	IC-ANALOGUE OPERATIONAL AMP TLC2652A... SINGLE, 8V CHOPPER STABILIZED, OFFSET 1.0uV MAX, OFFSET TEMP	TEXAS INSTRUMENTS	TLC2652ACP
IC2	28461/349	IC-ANALOGUE OPERATIONAL AMP TL074... QUAD, JFET-INPUT, LINEAR, 14 PIN, DUAL-IN-LINE.	MOTOROLA INC.	TL074CN
IC3	28461/901	TRANSISTOR NPN BIPOLAR CA3046... ARRAY, 20V 50mA 5-TRANSISTORS, 3-SINGLES & 1-PAIR, 14 PIN,	NAT. SEMICONDUCTOR	LM3046N
IC4	28461/901	TRANSISTOR NPN BIPOLAR CA3046... ARRAY, 20V 50mA 5-TRANSISTORS, 3-SINGLES & 1-PAIR, 14 PIN,	NAT. SEMICONDUCTOR	LM3046N
IC6	28461/780	IC-ANALOGUE VOLTAGE-REGULATOR 79L05AC... 5V 100mA NEGATIVE, LINEAR, 5% REGULATION, MONOLITHIC, 8	NAT. SEMICONDUCTOR	LM79L05ACM
R15	24811/173	RESISTOR-FIXED METAL-FILM 1K +/- 1% 250mW 200V 50 ppm/DEG.C, SURFACE MOUNTED, SIZE MINI-MELF, (8mm	VISHAY COMPONENTS	SMM0204-1K0-1%-50ppm
R16	24811/173	RESISTOR-FIXED METAL-FILM 1K +/- 1% 250mW 200V 50 ppm/DEG.C, SURFACE MOUNTED, SIZE MINI-MELF, (8mm	VISHAY COMPONENTS	SMM0204-1K0-1%-50ppm
R18	24811/909	RESISTOR-FIXED METAL-FILM 51R1 +/- 1% 250mW 200V 50 ppm/DEG.C, LOW-INDUCTANCE, SURFACE MOUNTED,	VISHAY COMPONENTS	SMM0204-HF-51R1-1%
R19	24811/909	RESISTOR-FIXED METAL-FILM 51R1 +/- 1% 250mW 200V 50 ppm/DEG.C, LOW-INDUCTANCE, SURFACE MOUNTED,	VISHAY COMPONENTS	SMM0204-HF-51R1-1%
R22	24811/901	RESISTOR-FIXED METAL-FILM 10R +/- 1% 250mW 200V 50 ppm/DEG.C, LOW-INDUCTANCE, SURFACE MOUNTED, SIZE	VISHAY COMPONENTS	SMM0204-HF-10R-1%

Cir. Ref.	MI part number	Description	Manufacturer	Manufacturer's part number
Input/output switching board A11/1 (contd.)				
R23	24811/901	RESISTOR-FIXED METAL-FILM 10R +/- 1% 250mW 200V 50 ppm/DEG.C, LOW-INDUCTANCE, SURFACE MOUNTED, SIZE	VISHAY COMPONENTS	SMM0204-HF-10R-1%
R24	24811/602	RESISTOR-FIXED METAL-FILM 10K +/- 0.1% 250mW 200V 15 ppm/DEG.C, SURFACE MOUNTED, SIZE MINI-MELF,	VISHAY COMPONENTS	SMM0204-10K0-0.1%-15
R25	24811/602	RESISTOR-FIXED METAL-FILM 10K +/- 0.1% 250mW 200V 15 ppm/DEG.C, SURFACE MOUNTED, SIZE MINI-MELF,	VISHAY COMPONENTS	SMM0204-10K0-0.1%-15
R27	24811/125	RESISTOR-FIXED METAL-FILM 10R +/- 1% 250mW 200V 50 ppm/DEG.C, SURFACE MOUNTED, SIZE MINI-MELF, (8mm	VISHAY COMPONENTS	SMM0204-10R-1%-50ppm
R31	24811/197	RESISTOR-FIXED METAL-FILM 10K +/- 1% 250mW 200V 50 ppm/DEG.C, SURFACE MOUNTED, SIZE MINI-MELF, (8mm	VISHAY COMPONENTS	SMM0204-10K-1%50ppm
R32	24811/204	RESISTOR-FIXED METAL-FILM 20K +/- 1% 250mW 200V 50 ppm/DEG.C, SURFACE MOUNTED, SIZE MINI-MELF, (8mm	VISHAY COMPONENTS	SMM0204-20K-1%50ppm
R33	24811/191	RESISTOR-FIXED METAL-FILM 5K62 +/- 1% 250mW 200V 50 ppm/DEG.C, SURFACE MOUNTED, SIZE MINI-MELF,	VISHAY COMPONENTS	SMM0204-5K62-1%50ppm
R34	24811/125	RESISTOR-FIXED METAL-FILM 10R +/- 1% 250mW 200V 50 ppm/DEG.C, SURFACE MOUNTED, SIZE MINI-MELF, (8mm	VISHAY COMPONENTS	SMM0204-10R-1%-50ppm
R35	24811/211	RESISTOR-FIXED METAL-FILM 39K2 +/- 1% 250mW 200V 50 ppm/DEG.C, SURFACE MOUNTED, SIZE MINI-MELF,	VISHAY COMPONENTS	SMM0204-39K2-1%50ppm
R36	24811/213	RESISTOR-FIXED METAL-FILM 47K5 +/- 1% 250mW 200V 50 ppm/DEG.C, SURFACE MOUNTED, SIZE MINI-MELF,	VISHAY COMPONENTS	SMM0204-47K5-1%50ppm
R37	24811/213	RESISTOR-FIXED METAL-FILM 47K5 +/- 1% 250mW 200V 50 ppm/DEG.C, SURFACE MOUNTED, SIZE MINI-MELF,	VISHAY COMPONENTS	SMM0204-47K5-1%50ppm
R40	24811/237	RESISTOR-FIXED METAL-FILM 475K +/- 1% 250mW 200V 50 ppm/DEG.C, SURFACE MOUNTED, SIZE MINI-MELF,	VISHAY COMPONENTS	SMM0204-475K-1%50ppm
R41	24811/173	RESISTOR-FIXED METAL-FILM 1K +/- 1% 250mW 200V 50 ppm/DEG.C, SURFACE MOUNTED, SIZE MINI-MELF, (8mm	VISHAY COMPONENTS	SMM0204-1K0-1%-50ppm
R42 to R45	24811/201	RESISTOR-FIXED METAL-FILM 15K +/- 1% 250mW 200V 50 ppm/DEG.C, SURFACE MOUNTED, SIZE MINI-MELF, (8mm	VISHAY COMPONENTS	SMM0204-15K-1%50ppm
R47 to R51	24811/173	RESISTOR-FIXED METAL-FILM 1K +/- 1% 250mW 200V 50 ppm/DEG.C, SURFACE MOUNTED, SIZE MINI-MELF, (8mm	VISHAY COMPONENTS	SMM0204-1K0-1%-50ppm
R52	24811/201	RESISTOR-FIXED METAL-FILM 15K +/- 1% 250mW 200V 50 ppm/DEG.C, SURFACE MOUNTED, SIZE MINI-MELF, (8mm	VISHAY COMPONENTS	SMM0204-15K-1%50ppm
R54	24811/173	RESISTOR-FIXED METAL-FILM 1K +/- 1% 250mW 200V 50 ppm/DEG.C, SURFACE MOUNTED, SIZE MINI-MELF, (8mm	VISHAY COMPONENTS	SMM0204-1K0-1%-50ppm
R55	24811/173	RESISTOR-FIXED METAL-FILM 1K +/- 1% 250mW 200V 50 ppm/DEG.C, SURFACE MOUNTED, SIZE MINI-MELF, (8mm	VISHAY COMPONENTS	SMM0204-1K0-1%-50ppm
R57	24811/197	RESISTOR-FIXED METAL-FILM 10K +/- 1% 250mW 200V 50 ppm/DEG.C, SURFACE MOUNTED, SIZE MINI-MELF, (8mm	VISHAY COMPONENTS	SMM0204-10K-1%50ppm
R58	24811/197	RESISTOR-FIXED METAL-FILM 10K +/- 1% 250mW 200V 50 ppm/DEG.C, SURFACE MOUNTED, SIZE MINI-MELF, (8mm	VISHAY COMPONENTS	SMM0204-10K-1%50ppm
R59	24811/213	RESISTOR-FIXED METAL-FILM 47K5 +/- 1% 250mW 200V 50 ppm/DEG.C, SURFACE MOUNTED, SIZE MINI-MELF,	VISHAY COMPONENTS	SMM0204-47K5-1%50ppm
R60	24811/201	RESISTOR-FIXED METAL-FILM 15K +/- 1% 250mW 200V 50 ppm/DEG.C, SURFACE MOUNTED, SIZE MINI-MELF, (8mm	VISHAY COMPONENTS	SMM0204-15K-1%50ppm
R61	24811/177	RESISTOR-FIXED METAL-FILM 1K5 +/- 1% 250mW 200V 50 ppm/DEG.C, SURFACE MOUNTED, SIZE MINI-MELF, (8mm	VISHAY COMPONENTS	SMM0204-1K5-1%50ppm
R63	24811/208	RESISTOR-FIXED METAL-FILM 30K1 +/- 1% 250mW 200V 50 ppm/DEG.C, SURFACE MOUNTED, SIZE MINI-MELF,	VISHAY COMPONENTS	SMM0204-30K1-1%50ppm
R65	24811/213	RESISTOR-FIXED METAL-FILM 47K5 +/- 1% 250mW 200V 50 ppm/DEG.C, SURFACE MOUNTED, SIZE MINI-MELF,	VISHAY COMPONENTS	SMM0204-47K5-1%50ppm
R67	24811/197	RESISTOR-FIXED METAL-FILM 10K +/- 1% 250mW 200V 50 ppm/DEG.C, SURFACE MOUNTED, SIZE MINI-MELF, (8mm	VISHAY COMPONENTS	SMM0204-10K-1%50ppm

Input/output switching board A11/1 (contd.)

Cir. Ref.	MI part number	Description	Manufacturer	Manufacturer's part number
R68	24811/161	RESISTOR-FIXED METAL-FILM 332R +/- 1% 250mW 200V 50 ppm/DEG.C, SURFACE MOUNTED, SIZE MINI-MELF,	VISHAY COMPONENTS	SMM0204-332R-1%50ppm
R69	24811/208	RESISTOR-FIXED METAL-FILM 30K1 +/- 1% 250mW 200V 50 ppm/DEG.C, SURFACE MOUNTED, SIZE MINI-MELF,	VISHAY COMPONENTS	SMM0204-30K1-1%50ppm
R70	24811/125	RESISTOR-FIXED METAL-FILM 10R +/- 1% 250mW 200V 50 ppm/DEG.C, SURFACE MOUNTED, SIZE MINI-MELF, (8mm	VISHAY COMPONENTS	SMM0204-10R-1%-50ppm
R71	24811/197	RESISTOR-FIXED METAL-FILM 10K +/- 1% 250mW 200V 50 ppm/DEG.C, SURFACE MOUNTED, SIZE MINI-MELF, (8mm	VISHAY COMPONENTS	SMM0204-10K-1%50ppm
R72	24811/173	RESISTOR-FIXED METAL-FILM 1K +/- 1% 250mW 200V 50 ppm/DEG.C, SURFACE MOUNTED, SIZE MINI-MELF, (8mm	VISHAY COMPONENTS	SMM0204-1K0-1%-50ppm
R73	24811/161	RESISTOR-FIXED METAL-FILM 332R +/- 1% 250mW 200V 50 ppm/DEG.C, SURFACE MOUNTED, SIZE MINI-MELF,	VISHAY COMPONENTS	SMM0204-332R-1%50ppm
R74	24811/185	RESISTOR-FIXED METAL-FILM 3K32 +/- 1% 250mW 200V 50 ppm/DEG.C, SURFACE MOUNTED, SIZE MINI-MELF,	VISHAY COMPONENTS	SMM0204-3K32-1%50ppm
R75 to R79	24811/912	RESISTOR-FIXED METAL-FILM 100R +/- 1% 250mW 200V 50 ppm/DEG.C, LOW-INDUCTANCE, SURFACE MOUNTED,	VISHAY COMPONENTS	SMM0204-HF-100R-1%
R80	24811/185	RESISTOR-FIXED METAL-FILM 3K32 +/- 1% 250mW 200V 50 ppm/DEG.C, SURFACE MOUNTED, SIZE MINI-MELF,	VISHAY COMPONENTS	SMM0204-3K32-1%50ppm
R81	24811/161	RESISTOR-FIXED METAL-FILM 332R +/- 1% 250mW 200V 50 ppm/DEG.C, SURFACE MOUNTED, SIZE MINI-MELF,	VISHAY COMPONENTS	SMM0204-332R-1%50ppm
R82	24811/245	RESISTOR-FIXED METAL-FILM 1M +/- 1% 250mW 200V 50 ppm/DEG.C, SURFACE MOUNTED, SIZE MINI-MELF, (8mm	VISHAY COMPONENTS	SMM0204-1M0-1%50ppm
R83 to R86	24811/173	RESISTOR-FIXED METAL-FILM 1K +/- 1% 250mW 200V 50 ppm/DEG.C, SURFACE MOUNTED, SIZE MINI-MELF, (8mm	VISHAY COMPONENTS	SMM0204-1K0-1%-50ppm
R88	24811/923	RESISTOR-FIXED METAL-FILM 68R1 +/- 1% 250mW 200V 50 ppm/DEG.C, LOW-INDUCTANCE, SURFACE MOUNTED,	VISHAY COMPONENTS	SMM0204-HF-68R1-1%
R89	24811/924	RESISTOR-FIXED METAL-FILM 182R +/- 1% 250mW 200V 50 ppm/DEG.C, LOW-INDUCTANCE, SURFACE MOUNTED,	VISHAY COMPONENTS	SMM0204-HF-182R-1%
R100	24811/173	RESISTOR-FIXED METAL-FILM 1K +/- 1% 250mW 200V 50 ppm/DEG.C, SURFACE MOUNTED, SIZE MINI-MELF, (8mm	VISHAY COMPONENTS	SMM0204-1K0-1%-50ppm
R101	24811/181	RESISTOR-FIXED METAL-FILM 2K21 +/- 1% 250mW 200V 50 ppm/DEG.C, SURFACE MOUNTED, SIZE MINI-MELF,	VISHAY COMPONENTS	SMM0204-2K21-1%50ppm
R102	24811/173	RESISTOR-FIXED METAL-FILM 1K +/- 1% 250mW 200V 50 ppm/DEG.C, SURFACE MOUNTED, SIZE MINI-MELF, (8mm	VISHAY COMPONENTS	SMM0204-1K0-1%-50ppm
R104	24811/173	RESISTOR-FIXED METAL-FILM 1K +/- 1% 250mW 200V 50 ppm/DEG.C, SURFACE MOUNTED, SIZE MINI-MELF, (8mm	VISHAY COMPONENTS	SMM0204-1K0-1%-50ppm
R105	24811/181	RESISTOR-FIXED METAL-FILM 2K21 +/- 1% 250mW 200V 50 ppm/DEG.C, SURFACE MOUNTED, SIZE MINI-MELF,	VISHAY COMPONENTS	SMM0204-2K21-1%50ppm
R106	24811/173	RESISTOR-FIXED METAL-FILM 1K +/- 1% 250mW 200V 50 ppm/DEG.C, SURFACE MOUNTED, SIZE MINI-MELF, (8mm	VISHAY COMPONENTS	SMM0204-1K0-1%-50ppm
R107	24811/181	RESISTOR-FIXED METAL-FILM 2K21 +/- 1% 250mW 200V 50 ppm/DEG.C, SURFACE MOUNTED, SIZE MINI-MELF,	VISHAY COMPONENTS	SMM0204-2K21-1%50ppm
R110 to R112	24811/909	RESISTOR-FIXED METAL-FILM 51R1 +/- 1% 250mW 200V 50 ppm/DEG.C, LOW-INDUCTANCE, SURFACE MOUNTED,	VISHAY COMPONENTS	SMM0204-HF-51R1-1%
R120	24811/930	RESISTOR-FIXED METAL-FILM 200R +/- 1% 250mW 200V 50 ppm/DEG.C, LOW-INDUCTANCE, SURFACE MOUNTED,	VISHAY COMPONENTS	SMM0204-HF-200R-1%
R121	24811/930	RESISTOR-FIXED METAL-FILM 200R +/- 1% 250mW 200V 50 ppm/DEG.C, LOW-INDUCTANCE, SURFACE MOUNTED,	VISHAY COMPONENTS	SMM0204-HF-200R-1%
R122	24811/915	RESISTOR-FIXED METAL-FILM 150R +/- 1% 250mW 200V 50 ppm/DEG.C, LOW-INDUCTANCE, SURFACE MOUNTED,	VISHAY COMPONENTS	SMM0204-HF-150R-1%
R123	24811/915	RESISTOR-FIXED METAL-FILM 150R +/- 1% 250mW 200V 50 ppm/DEG.C, LOW-INDUCTANCE, SURFACE MOUNTED,	VISHAY COMPONENTS	SMM0204-HF-150R-1%

Cir. Ref.	MI part number	Description	Manufacturer	Manufacturer's part number
Input/output switching board A11/1 (contd.)				
R124	24811/912	RESISTOR-FIXED METAL-FILM 100R +/- 1% 250mW 200V 50 ppm/DEG.C, LOW-INDUCTANCE, SURFACE MOUNTED,	VISHAY COMPONENTS	SMM0204-HF-100R-1%
R130	24811/930	RESISTOR-FIXED METAL-FILM 200R +/- 1% 250mW 200V 50 ppm/DEG.C, LOW-INDUCTANCE, SURFACE MOUNTED,	VISHAY COMPONENTS	SMM0204-HF-200R-1%
R131	24811/930	RESISTOR-FIXED METAL-FILM 200R +/- 1% 250mW 200V 50 ppm/DEG.C, LOW-INDUCTANCE, SURFACE MOUNTED,	VISHAY COMPONENTS	SMM0204-HF-200R-1%
R132	24811/915	RESISTOR-FIXED METAL-FILM 150R +/- 1% 250mW 200V 50 ppm/DEG.C, LOW-INDUCTANCE, SURFACE MOUNTED,	VISHAY COMPONENTS	SMM0204-HF-150R-1%
R133	24811/915	RESISTOR-FIXED METAL-FILM 150R +/- 1% 250mW 200V 50 ppm/DEG.C, LOW-INDUCTANCE, SURFACE MOUNTED,	VISHAY COMPONENTS	SMM0204-HF-150R-1%
R134	24811/912	RESISTOR-FIXED METAL-FILM 100R +/- 1% 250mW 200V 50 ppm/DEG.C, LOW-INDUCTANCE, SURFACE MOUNTED,	VISHAY COMPONENTS	SMM0204-HF-100R-1%
RLA to RLH	23486/182	RELAY MAGNETIC, SINGLE-POLE CHANGEOVER, POLARISED SINGLE 5V COIL, 125R - ISOL 60dB @ 1.8GHz, MI	MATSUSHITA CONTROLS	RK1-5V-H22
TR1	28435/241	TRANSISTOR PNP BIPOLAR BCX17... 45V 100MHz 425mW 500mA 100hFE MIN @ 100mA, MARKING CODE T1, SURFACE	PHILIPS	BCX17
TR2	28435/241	TRANSISTOR PNP BIPOLAR BCX17... 45V 100MHz 425mW 500mA 100hFE MIN @ 100mA, MARKING CODE T1, SURFACE	PHILIPS	BCX17
TR3	28435/241	TRANSISTOR PNP BIPOLAR BCX17... 45V 100MHz 425mW 500mA 100hFE MIN @ 100mA, MARKING CODE T1, SURFACE	PHILIPS	BCX17
TR4	28435/241	TRANSISTOR PNP BIPOLAR BCX17... 45V 100MHz 425mW 500mA 100hFE MIN @ 100mA, MARKING CODE T1, SURFACE	PHILIPS	BCX17

Cir. Ref.	MI part number	Description	Manufacturer	Manufacturer's part number

Single sideband demodulator (optional) A15

When ordering, prefix circuit reference with A15.

	44830-021	Complete unit		Issue 002
C1	26386/875	CAPACITOR-FIXED CERAMIC 10nF +/-10% 50V X7R/2C1, MULTILAYER, SURFACE-MOUNTED, SIZE 0805, NICKEL	ROHM ELECTRONICS LTD	MCH21-5C-103-KP
C2	26386/824	CAPACITOR-FIXED CERAMIC 100pF +/-5% 50V NP0 MULTILAYER, SURFACE-MOUNTED, SIZE 0805, NICKEL	ROHM ELECTRONICS LTD	MCH21-5A-101-JP
C3 to C5	26386/875	CAPACITOR-FIXED CERAMIC 10nF +/-10% 50V X7R/2C1, MULTILAYER, SURFACE-MOUNTED, SIZE 0805, NICKEL	ROHM ELECTRONICS LTD	MCH21-5C-103-KP
C6	26386/760	CAPACITOR-FIXED CERAMIC 220nF +/-10% 50V X7R MULTILAYER, SURFACE-MOUNTED, SIZE 1210, NICKEL	PHILIPS	1210-2R-224-K9-BBC
C7	26386/828	CAPACITOR-FIXED CERAMIC 220pF +/-5% 50V NP0 MULTILAYER, SURFACE-MOUNTED, SIZE 0805, NICKEL	ROHM ELECTRONICS LTD	MCH21-5A-221-JP
C8	26386/828	CAPACITOR-FIXED CERAMIC 220pF +/-5% 50V NP0 MULTILAYER, SURFACE-MOUNTED, SIZE 0805, NICKEL	ROHM ELECTRONICS LTD	MCH21-5A-221-JP
C9	26386/875	CAPACITOR-FIXED CERAMIC 10nF +/-10% 50V X7R/2C1, MULTILAYER, SURFACE-MOUNTED, SIZE 0805, NICKEL	ROHM ELECTRONICS LTD	MCH21-5C-103-KP
C10	26451/001	CAPACITOR-FIXED ALUMINIUM 1uF +/-20% 50V ELECTROLYTIC, SURFACE-MOUNTED, SIZE 4.3 x 4.3mm,	PANASONIC INDUSTRIAL	ECE-V-1HA-010R
C11	26386/760	CAPACITOR-FIXED CERAMIC 220nF +/-10% 50V X7R MULTILAYER, SURFACE-MOUNTED, SIZE 1210, NICKEL	PHILIPS	1210-2R-224-K9-BBC
C12	26386/875	CAPACITOR-FIXED CERAMIC 10nF +/-10% 50V X7R/2C1, MULTILAYER, SURFACE-MOUNTED, SIZE 0805, NICKEL	ROHM ELECTRONICS LTD	MCH21-5C-103-KP
C13	26451/004	CAPACITOR-FIXED ALUMINIUM 10uF +/-20% 35V ELECTROLYTIC, SURFACE-MOUNTED, SIZE 5.3 x 5.3mm,	DUBILIER CAPACITORS	DVC-10/35-T/R
C14	26386/828	CAPACITOR-FIXED CERAMIC 220pF +/-5% 50V NP0 MULTILAYER, SURFACE-MOUNTED, SIZE 0805, NICKEL	ROHM ELECTRONICS LTD	MCH21-5A-221-JP
C15	26386/760	CAPACITOR-FIXED CERAMIC 220nF +/-10% 50V X7R MULTILAYER, SURFACE-MOUNTED, SIZE 1210, NICKEL	PHILIPS	1210-2R-224-K9-BBC
C16	26386/875	CAPACITOR-FIXED CERAMIC 10nF +/-10% 50V X7R/2C1, MULTILAYER, SURFACE-MOUNTED, SIZE 0805, NICKEL	ROHM ELECTRONICS LTD	MCH21-5C-103-KP
C17	26386/875	CAPACITOR-FIXED CERAMIC 10nF +/-10% 50V X7R/2C1, MULTILAYER, SURFACE-MOUNTED, SIZE 0805, NICKEL	ROHM ELECTRONICS LTD	MCH21-5C-103-KP
C18	26451/001	CAPACITOR-FIXED ALUMINIUM 1uF +/-20% 50V ELECTROLYTIC, SURFACE-MOUNTED, SIZE 4.3 x 4.3mm,	PANASONIC INDUSTRIAL	ECE-V-1HA-010R
C19	26386/992	CAPACITOR-FIXED CERAMIC 330nF +/-10% 50V X7R, MULTILAYER, SURFACE-MOUNTED, SIZE 1812, NICKEL	PHILIPS	1812-2B-334-K9BB
C20	26386/992	CAPACITOR-FIXED CERAMIC 330nF +/-10% 50V X7R, MULTILAYER, SURFACE-MOUNTED, SIZE 1812, NICKEL	PHILIPS	1812-2B-334-K9BB
C21	26421/142	CAPACITOR-FIXED ALUMINIUM 220uF +/-20% 16V ELECTROLYTIC, RADIAL, 5mm PWP, (TAPED).	PANASONIC INDUSTRIAL	ECE-A-1CU-221B
C22	26386/899	CAPACITOR-FIXED CERAMIC 100nF +/-10% 50V X7R/2C1, MULTILAYER, SURFACE-MOUNTED, SIZE 1206, NICKEL	ROHM ELECTRONICS LTD	MCH31-5C-104-KP
C23	26386/899	CAPACITOR-FIXED CERAMIC 100nF +/-10% 50V X7R/2C1, MULTILAYER, SURFACE-MOUNTED, SIZE 1206, NICKEL	ROHM ELECTRONICS LTD	MCH31-5C-104-KP
C24	26386/992	CAPACITOR-FIXED CERAMIC 330nF +/-10% 50V X7R, MULTILAYER, SURFACE-MOUNTED, SIZE 1812, NICKEL	PHILIPS	1812-2B-334-K9BB
C25	26386/899	CAPACITOR-FIXED CERAMIC 100nF +/-10% 50V X7R/2C1, MULTILAYER, SURFACE-MOUNTED, SIZE 1206, NICKEL	ROHM ELECTRONICS LTD	MCH31-5C-104-KP

Cir. Ref.	MI part number	Description	Manufacturer	Manufacturer's part number
Single sideband demodulator (optional) A15 (contd.)				
C26	26386/992	CAPACITOR-FIXED CERAMIC 330nF +/-10% 50V X7R, MULTILAYER, SURFACE-MOUNTED, SIZE 1812, NICKEL	PHILIPS	1812-2B-334-K9BB
C27	26386/863	CAPACITOR-FIXED CERAMIC 1nF +/-10% 50V X7R/2C1, MULTILAYER, SURFACE-MOUNTED, SIZE 0805, NICKEL	ROHM ELECTRONICS LTD	MCH21-5C-102-KP
D1	28383/934	DIODE SMALL-SIGNAL, LL4148... 500mW 50V 150mA 1Vf @ 10mA, SURFACE MOUNTED, MINI-MELF, (8mm TAPE -	PHILIPS	PMLL4148L
D2	28383/934	DIODE SMALL-SIGNAL, LL4148... 500mW 50V 150mA 1Vf @ 10mA, SURFACE MOUNTED, MINI-MELF, (8mm TAPE -	PHILIPS	PMLL4148L
IC1	28531/023	RF-MIXER DOUBLE-BALANCED, NE602A... >14dB GAIN @ 45MHz, 500MHz TYP SIG FREQ, 1K5 -15dBm INTERCEPT,	PHILIPS	NE602AD
IC2	28531/023	RF-MIXER DOUBLE-BALANCED, NE602A... >14dB GAIN @ 45MHz, 500MHz TYP SIG FREQ, 1K5 -15dBm INTERCEPT,	PHILIPS	NE602AD
IC3	28464/189	IC-DIGITAL COUNTER 74HC393... 4 BIT, DUAL, BINARY RIPPLE, CMOS-H/SPEED, 14 PIN, SMALL-OUTLINE.	PHILIPS	74HC393D
IC4	28461/412	IC-ANALOGUE OPERATIONAL AMP TL072... DUAL, 18V UNITY GAIN BNDWDTH 3MHz, OFFSET VOLTAGE 10mV, SLEW	MOTOROLA INC.	TL072CD
IC5	28461/741	IC-ANALOGUE VOLTAGE-REGULATOR LM317L... 37V 100mA POSITIVE ADJUSTABLE, LINEAR, MONOLITHIC, 3 PIN,	NAT. SEMICONDUCTOR	LM317LZ
L1	23642/564	INDUCTOR-FIXED 330uH +/- 10% COATED-LACQUER, MINIATURE, 95mA 22R MAX, 45 Q @ 0.79 MHz, 3.3 MHz	MEGGITT ELECTRONICS	C12-406/8/27471/010
L2	23642/567	INDUCTOR-FIXED 1mH +/- 10% COATED-LACQUER, MINIATURE, 70mA 40R MAX, 40 Q @ 0.79 MHz, 2.2 MHz	MEGGITT ELECTRONICS	C12-406/8/27471/016
L3	23642/564	INDUCTOR-FIXED 330uH +/- 10% COATED-LACQUER, MINIATURE, 95mA 22R MAX, 45 Q @ 0.79 MHz, 3.3 MHz	MEGGITT ELECTRONICS	C12-406/8/27471/010
R1	24811/156	RESISTOR-FIXED METAL-FILM 200R +/- 1% 250mW 200V 50 ppm/DEG.C, SURFACE MOUNTED, SIZE MINI-MELF,	VISHAY COMPONENTS	SMM0204-200R-1%50ppm
R2	24811/221	RESISTOR-FIXED METAL-FILM 100K +/- 1% 250mW 200V 50 ppm/DEG.C, SURFACE MOUNTED, SIZE MINI-MELF,	VISHAY COMPONENTS	SMM0204-100K-1%50ppm
R3	24811/161	RESISTOR-FIXED METAL-FILM 332R +/- 1% 250mW 200V 50 ppm/DEG.C, SURFACE MOUNTED, SIZE MINI-MELF,	VISHAY COMPONENTS	SMM0204-332R-1%50ppm
R4	24811/181	RESISTOR-FIXED METAL-FILM 2K21 +/- 1% 250mW 200V 50 ppm/DEG.C, SURFACE MOUNTED, SIZE MINI-MELF,	VISHAY COMPONENTS	SMM0204-2K21-1%50ppm
R5	24811/125	RESISTOR-FIXED METAL-FILM 10R +/- 1% 250mW 200V 50 ppm/DEG.C, SURFACE MOUNTED, SIZE MINI-MELF, (8mm	VISHAY COMPONENTS	SMM0204-10R-1%-50ppm
R6	24811/125	RESISTOR-FIXED METAL-FILM 10R +/- 1% 250mW 200V 50 ppm/DEG.C, SURFACE MOUNTED, SIZE MINI-MELF, (8mm	VISHAY COMPONENTS	SMM0204-10R-1%-50ppm
R7	24811/149	RESISTOR-FIXED METAL-FILM 100R +/- 1% 250mW 200V 50 ppm/DEG.C, SURFACE MOUNTED, SIZE MINI-MELF,	VISHAY COMPONENTS	SMM0204-100R-1%50ppm
R8	24811/149	RESISTOR-FIXED METAL-FILM 100R +/- 1% 250mW 200V 50 ppm/DEG.C, SURFACE MOUNTED, SIZE MINI-MELF,	VISHAY COMPONENTS	SMM0204-100R-1%50ppm
R9	24811/213	RESISTOR-FIXED METAL-FILM 47K5 +/- 1% 250mW 200V 50 ppm/DEG.C, SURFACE MOUNTED, SIZE MINI-MELF,	VISHAY COMPONENTS	SMM0204-47K5-1%50ppm

Cir. Ref.	MI part number	Description	Manufacturer	Manufacturer's part number
Single sideband demodulator (optional) A15 (contd.)				
R10	24811/181	RESISTOR-FIXED METAL-FILM 2K21 +/- 1% 250mW 200V 50 ppm/DEG.C, SURFACE MOUNTED, SIZE MINI-MELF,	VISHAY COMPONENTS	SMM0204-2K21-1%50ppm
R11	24811/167	RESISTOR-FIXED METAL-FILM 562R +/- 1% 250mW 200V 50 ppm/DEG.C, SURFACE MOUNTED, SIZE MINI-MELF,	VISHAY COMPONENTS	SMM0204-562R-1%50ppm
R12	24811/137	RESISTOR-FIXED METAL-FILM 33R2 +/- 1% 250mW 200V 50 ppm/DEG.C, SURFACE MOUNTED, SIZE MINI-MELF,	VISHAY COMPONENTS	SMM0204-33R2-1%50ppm
R13	24811/197	RESISTOR-FIXED METAL-FILM 10K +/- 1% 250mW 200V 50 ppm/DEG.C, SURFACE MOUNTED, SIZE MINI-MELF, (8mm	VISHAY COMPONENTS	SMM0204-10K-1%50ppm
R14	24811/181	RESISTOR-FIXED METAL-FILM 2K21 +/- 1% 250mW 200V 50 ppm/DEG.C, SURFACE MOUNTED, SIZE MINI-MELF,	VISHAY COMPONENTS	SMM0204-2K21-1%50ppm
R15	24811/213	RESISTOR-FIXED METAL-FILM 47K5 +/- 1% 250mW 200V 50 ppm/DEG.C, SURFACE MOUNTED, SIZE MINI-MELF,	VISHAY COMPONENTS	SMM0204-47K5-1%50ppm
R16	24811/161	RESISTOR-FIXED METAL-FILM 332R +/- 1% 250mW 200V 50 ppm/DEG.C, SURFACE MOUNTED, SIZE MINI-MELF,	VISHAY COMPONENTS	SMM0204-332R-1%50ppm
R17	24811/197	RESISTOR-FIXED METAL-FILM 10K +/- 1% 250mW 200V 50 ppm/DEG.C, SURFACE MOUNTED, SIZE MINI-MELF, (8mm	VISHAY COMPONENTS	SMM0204-10K-1%50ppm
R18	24811/225	RESISTOR-FIXED METAL-FILM 150K +/- 1% 250mW 200V 50 ppm/DEG.C, SURFACE MOUNTED, SIZE MINI-MELF,	VISHAY COMPONENTS	SMM0204-150K-1%50ppm
R19	24811/195	RESISTOR-FIXED METAL-FILM 8K25 +/- 1% 250mW 200V 50 ppm/DEG.C, SURFACE MOUNTED, SIZE MINI-MELF,	VISHAY COMPONENTS	SMM0204-8K25-1%50ppm
R20	24811/221	RESISTOR-FIXED METAL-FILM 100K +/- 1% 250mW 200V 50 ppm/DEG.C, SURFACE MOUNTED, SIZE MINI-MELF,	VISHAY COMPONENTS	SMM0204-100K-1%50ppm
R21	24811/157	RESISTOR-FIXED METAL-FILM 221R +/- 1% 250mW 200V 50 ppm/DEG.C, SURFACE MOUNTED, SIZE MINI-MELF,	VISHAY COMPONENTS	SMM0204-221R-1%50ppm
R22	24811/169	RESISTOR-FIXED METAL-FILM 681R +/- 1% 250mW 200V 50 ppm/DEG.C, SURFACE MOUNTED, SIZE MINI-MELF,	VISHAY COMPONENTS	SMM0204-681R-1%50ppm
R23	24811/173	RESISTOR-FIXED METAL-FILM 1K +/- 1% 250mW 200V 50 ppm/DEG.C, SURFACE MOUNTED, SIZE MINI-MELF, (8mm	VISHAY COMPONENTS	SMM0204-1K0-1%-50ppm
R24	25711/640	RESISTOR-VARIABLE CERMET LINEAR, 5K 10% 500mW 200V 150 ppm/DEG.C, SINGLE-TURN, HORIZONTAL-PCB,	VISHAY COMPONENTS	TYA-5K-10%
R25	24811/167	RESISTOR-FIXED METAL-FILM 562R +/- 1% 250mW 200V 50 ppm/DEG.C, SURFACE MOUNTED, SIZE MINI-MELF,	VISHAY COMPONENTS	SMM0204-562R-1%50ppm
R26	24811/167	RESISTOR-FIXED METAL-FILM 562R +/- 1% 250mW 200V 50 ppm/DEG.C, SURFACE MOUNTED, SIZE MINI-MELF,	VISHAY COMPONENTS	SMM0204-562R-1%50ppm
R27	24811/197	RESISTOR-FIXED METAL-FILM 10K +/- 1% 250mW 200V 50 ppm/DEG.C, SURFACE MOUNTED, SIZE MINI-MELF, (8mm	VISHAY COMPONENTS	SMM0204-10K-1%50ppm
TR1	28459/077	TRANSISTOR N-CHANNEL-DEPLETION MOSFET BF996S... 20V 300mW 20mA DUAL-GATE, MARKING CODE MH, SURFACE	PHILIPS	BF996S
TR2	28457/850	TRANSISTOR NPN BIPOLAR FMMT2369... 40V 600MHz 300mW 500mA 40hFE MIN @ 10mA, MARKING CODE *1J,	PHILIPS	PMBT2369
TR3	28453/829	TRANSISTOR NPN BIPOLAR BC848B... 30V 200MHz 200mW 100mA 290hFE @ 2mA, NOISE 2dB @ 1KHz, MARKING CODE	PHILIPS	BC848B
TR4	28453/829	TRANSISTOR NPN BIPOLAR BC848B... 30V 200MHz 200mW 100mA 290hFE @ 2mA, NOISE 2dB @ 1KHz, MARKING CODE	PHILIPS	BC848B

Cir. Ref.	MI part number	Description	Manufacturer	Manufacturer's part number

RF generator output attenuator A20

	44429-080	Complete unit	Issue 005

Only available as a complete assembly. There are no user replacable items contained in it.

Input attenuator A21

	44429-081	Complete unit	Issue 005

Only available as a complete assembly. There are no user replacable items contained in it.

Cir. Ref.	MI part number	Description	Manufacturer	Manufacturer's part number

Audio processor B1/2

When ordering, prefix circuit reference with B1/2.

	44830-180	Complete unit	Issue 005	
C1	26386/602	CAPACITOR-FIXED CERAMIC 1uF +/-10% 25V X7R, MULTILAYER, SURFACE-MOUNTED, SIZE 1210, NICKEL	PHILIPS	1210-2R-105-K8-BBC
C2	26386/602	CAPACITOR-FIXED CERAMIC 1uF +/-10% 25V X7R, MULTILAYER, SURFACE-MOUNTED, SIZE 1210, NICKEL	PHILIPS	1210-2R-105-K8-BBC
C3 to C21	26386/875	CAPACITOR-FIXED CERAMIC 10nF +/-10% 50V X7R/2C1, MULTILAYER, SURFACE-MOUNTED, SIZE 0805, NICKEL	ROHM ELECTRONICS LTD	MCH21-5C-103-KP
C28 to C35	26386/899	CAPACITOR-FIXED CERAMIC 100nF +/-10% 50V X7R/2C1, MULTILAYER, SURFACE-MOUNTED, SIZE 1206, NICKEL	ROHM ELECTRONICS LTD	MCH31-5C-104-KP
C37	26386/820	CAPACITOR-FIXED CERAMIC 47pF +/-5% 50V NP0 MULTILAYER, SURFACE-MOUNTED, SIZE 0805, NICKEL	ROHM ELECTRONICS LTD	MCH21-5A-470-JP
C38 to C41	26386/899	CAPACITOR-FIXED CERAMIC 100nF +/-10% 50V X7R/2C1, MULTILAYER, SURFACE-MOUNTED, SIZE 1206, NICKEL	ROHM ELECTRONICS LTD	MCH31-5C-104-KP
C50	26421/152	CAPACITOR-FIXED ALUMINIUM 220uF +/-20% 16V ELECTROLYTIC, RADIAL, 5mm PWP, 9mm MAX BODY DIA,	VISHAY COMPONENTS	EKS-00-CC-322-D-C0
C51	26421/152	CAPACITOR-FIXED ALUMINIUM 220uF +/-20% 16V ELECTROLYTIC, RADIAL, 5mm PWP, 9mm MAX BODY DIA,	VISHAY COMPONENTS	EKS-00-CC-322-D-C0
C52	26451/010	CAPACITOR-FIXED ALUMINIUM 100uF +/-20% 6.3V ELECTROLYTIC, SURFACE-MOUNTED, SIZE 6.6 x 6.6mm,	PANASONIC INDUSTRIAL	ECE-V-0JA-101P
C53	26421/152	CAPACITOR-FIXED ALUMINIUM 220uF +/-20% 16V ELECTROLYTIC, RADIAL, 5mm PWP, 9mm MAX BODY DIA,	VISHAY COMPONENTS	EKS-00-CC-322-D-C0
C54	26421/152	CAPACITOR-FIXED ALUMINIUM 220uF +/-20% 16V ELECTROLYTIC, RADIAL, 5mm PWP, 9mm MAX BODY DIA,	VISHAY COMPONENTS	EKS-00-CC-322-D-C0
C55	26451/005	CAPACITOR-FIXED ALUMINIUM 22uF +/-20% 6.3V ELECTROLYTIC, SURFACE-MOUNTED, SIZE 4.3 x 4.3mm,	PANASONIC INDUSTRIAL	ECE-V-0JA-220R
C56	26451/001	CAPACITOR-FIXED ALUMINIUM 1uF +/-20% 50V ELECTROLYTIC, SURFACE-MOUNTED, SIZE 4.3 x 4.3mm,	PANASONIC INDUSTRIAL	ECE-V-1HA-010R
C57	26386/899	CAPACITOR-FIXED CERAMIC 100nF +/-10% 50V X7R/2C1, MULTILAYER, SURFACE-MOUNTED, SIZE 1206, NICKEL	ROHM ELECTRONICS LTD	MCH31-5C-104-KP
C58	26386/875	CAPACITOR-FIXED CERAMIC 10nF +/-10% 50V X7R/2C1, MULTILAYER, SURFACE-MOUNTED, SIZE 0805, NICKEL	ROHM ELECTRONICS LTD	MCH21-5C-103-KP
C60	26451/006	CAPACITOR-FIXED ALUMINIUM 22uF +/-20% 16V ELECTROLYTIC, SURFACE-MOUNTED, SIZE 5.3 x 5.3mm,	RUBYCON CAPACITORS	16-REV-22
C61	26386/814	CAPACITOR-FIXED CERAMIC 15pF +/-5% 50V NP0 MULTILAYER, SURFACE-MOUNTED, SIZE 0805, NICKEL	ROHM ELECTRONICS LTD	MCH21-5A-150-JP
C62	26386/814	CAPACITOR-FIXED CERAMIC 15pF +/-5% 50V NP0 MULTILAYER, SURFACE-MOUNTED, SIZE 0805, NICKEL	ROHM ELECTRONICS LTD	MCH21-5A-150-JP
C63	26343/447	CAPACITOR-FIXED CERAMIC 330pF +/-2% 63V N750 SINGLELAYER, RADIAL, 2.5mm PWP, (TAPED).	VISHAY COMPONENTS	ROU-331-GAK-ACR-J
C64	26343/432	CAPACITOR-FIXED CERAMIC 150pF +/-2% 63V N150 SINGLELAYER, RADIAL, 2.5mm PWP, (TAPED).	VISHAY COMPONENTS	RPO-151-GAK-ACR-J
C65	26343/921	CAPACITOR-FIXED CERAMIC 1.2nF +/-1% 63V NP0 MULTILAYER, RADIAL, 5.08mm PWP, (TAPED).	VISHAY COMPONENTS	VP41-BA-122-FA
C66	26343/434	CAPACITOR-FIXED CERAMIC 68pF +/-2% 63V N150 SINGLELAYER, RADIAL, 2.5mm PWP, (TAPED).	VISHAY COMPONENTS	ROP-680-GAK-ACR-J

Audio processor B1/2 (contd.)

Cir. Ref.	MI part number	Description	Manufacturer	Manufacturer's part number
C70	26343/943	CAPACITOR-FIXED CERAMIC 10nF +/-1% 50V NP0 MULTILAYER, RADIAL, 5.08mm PWP, (LOOSE OR TAPED).	VISHAY COMPONENTS	VP43-BA-103-FA
C71	26343/935	CAPACITOR-FIXED CERAMIC 4.7nF +/-1% 63V NP0 MULTILAYER, RADIAL, 5.08mm PWP, (TAPED).	VISHAY COMPONENTS	VP41-BA-472-FA
C72	26451/003	CAPACITOR-FIXED ALUMINIUM 10uF +/-20% 16V ELECTROLYTIC, SURFACE-MOUNTED, SIZE 4.3 x 4.3mm,	PANASONIC INDUSTRIAL	ECE-V-1CA-100R
C73	26343/447	CAPACITOR-FIXED CERAMIC 330pF +/-2% 63V N750 SINGLELAYER, RADIAL, 2.5mm PWP, (TAPED).	VISHAY COMPONENTS	ROU-331-GAK-ACR-J
C74	26343/432	CAPACITOR-FIXED CERAMIC 150pF +/-2% 63V N150 SINGLELAYER, RADIAL, 2.5mm PWP, (TAPED).	VISHAY COMPONENTS	RPO-151-GAK-ACR-J
C75	26343/921	CAPACITOR-FIXED CERAMIC 1.2nF +/-1% 63V NP0 MULTILAYER, RADIAL, 5.08mm PWP, (TAPED).	VISHAY COMPONENTS	VP41-BA-122-FA
C76	26343/434	CAPACITOR-FIXED CERAMIC 68pF +/-2% 63V N150 SINGLELAYER, RADIAL, 2.5mm PWP, (TAPED).	VISHAY COMPONENTS	ROP-680-GAK-ACR-J
C77	26451/001	CAPACITOR-FIXED ALUMINIUM 1uF +/-20% 50V ELECTROLYTIC, SURFACE-MOUNTED, SIZE 4.3 x 4.3mm,	PANASONIC INDUSTRIAL	ECE-V-1HA-010R
C78	26386/899	CAPACITOR-FIXED CERAMIC 100nF +/-10% 50V X7R/2C1, MULTILAYER, SURFACE-MOUNTED, SIZE 1206, NICKEL	ROHM ELECTRONICS LTD	MCH31-5C-104-KP
C79	26451/003	CAPACITOR-FIXED ALUMINIUM 10uF +/-20% 16V ELECTROLYTIC, SURFACE-MOUNTED, SIZE 4.3 x 4.3mm,	PANASONIC INDUSTRIAL	ECE-V-1CA-100R
C80	26386/818	CAPACITOR-FIXED CERAMIC 33pF +/-5% 50V NP0 MULTILAYER, SURFACE-MOUNTED, SIZE 0805, NICKEL	ROHM ELECTRONICS LTD	MCH21-5A-330-JP
C81	26386/818	CAPACITOR-FIXED CERAMIC 33pF +/-5% 50V NP0 MULTILAYER, SURFACE-MOUNTED, SIZE 0805, NICKEL	ROHM ELECTRONICS LTD	MCH21-5A-330-JP
C82	26386/832	CAPACITOR-FIXED CERAMIC 470pF +/-5% 50V NPO MULTILAYER, SURFACE-MOUNTED, SIZE 0805, NICKEL	ROHM ELECTRONICS LTD	MCH21-5A-471-JP
C83	26451/001	CAPACITOR-FIXED ALUMINIUM 1uF +/-20% 50V ELECTROLYTIC, SURFACE-MOUNTED, SIZE 4.3 x 4.3mm,	PANASONIC INDUSTRIAL	ECE-V-1HA-010R
C84	26386/871	CAPACITOR-FIXED CERAMIC 4.7nF +/-10% 50V X7R/2C1, MULTILAYER, SURFACE-MOUNTED, SIZE 0805, NICKEL	ROHM ELECTRONICS LTD	MCH21-5C-472-KP
C85	26386/863	CAPACITOR-FIXED CERAMIC 1nF +/-10% 50V X7R/2C1, MULTILAYER, SURFACE-MOUNTED, SIZE 0805, NICKEL	ROHM ELECTRONICS LTD	MCH21-5C-102-KP
C86	26386/818	CAPACITOR-FIXED CERAMIC 33pF +/-5% 50V NP0 MULTILAYER, SURFACE-MOUNTED, SIZE 0805, NICKEL	ROHM ELECTRONICS LTD	MCH21-5A-330-JP
C87	26386/814	CAPACITOR-FIXED CERAMIC 15pF +/-5% 50V NP0 MULTILAYER, SURFACE-MOUNTED, SIZE 0805, NICKEL	ROHM ELECTRONICS LTD	MCH21-5A-150-JP
C88	26343/943	CAPACITOR-FIXED CERAMIC 10nF +/-1% 50V NP0 MULTILAYER, RADIAL, 5.08mm PWP, (LOOSE OR TAPED).	VISHAY COMPONENTS	VP43-BA-103-FA
C89	26386/875	CAPACITOR-FIXED CERAMIC 10nF +/-10% 50V X7R/2C1, MULTILAYER, SURFACE-MOUNTED, SIZE 0805, NICKEL	ROHM ELECTRONICS LTD	MCH21-5C-103-KP
C90	26386/818	CAPACITOR-FIXED CERAMIC 33pF +/-5% 50V NP0 MULTILAYER, SURFACE-MOUNTED, SIZE 0805, NICKEL	ROHM ELECTRONICS LTD	MCH21-5A-330-JP
C91	26451/006	CAPACITOR-FIXED ALUMINIUM 22uF +/-20% 16V ELECTROLYTIC, SURFACE-MOUNTED, SIZE 5.3 x 5.3mm,	RUBYCON CAPACITORS	16-REV-22
C92	26386/875	CAPACITOR-FIXED CERAMIC 10nF +/-10% 50V X7R/2C1, MULTILAYER, SURFACE-MOUNTED, SIZE 0805, NICKEL	ROHM ELECTRONICS LTD	MCH21-5C-103-KP
C93	26386/875	CAPACITOR-FIXED CERAMIC 10nF +/-10% 50V X7R/2C1, MULTILAYER, SURFACE-MOUNTED, SIZE 0805, NICKEL	ROHM ELECTRONICS LTD	MCH21-5C-103-KP
C94	26386/867	CAPACITOR-FIXED CERAMIC 2.2nF +/-10% 50V X7R/2C1, MULTILAYER, SURFACE-MOUNTED, SIZE 0805, NICKEL	ROHM ELECTRONICS LTD	MCH21-5C-222-KP
C95	26386/818	CAPACITOR-FIXED CERAMIC 33pF +/-5% 50V NP0 MULTILAYER, SURFACE-MOUNTED, SIZE 0805, NICKEL	ROHM ELECTRONICS LTD	MCH21-5A-330-JP

Cir. Ref.	MI part number	Description	Manufacturer	Manufacturer's part number
Audio processor B1/2 (contd.)				
C96	26451/009	CAPACITOR-FIXED ALUMINIUM 47uF +/-20% 16V ELECTROLYTIC, SURFACE-MOUNTED, SIZE 6.6 x 6.6mm,	PANASONIC INDUSTRIAL	ECE-V-1CA-470P
C97	26343/788	CAPACITOR-FIXED CERAMIC 680pF +/-5% 50V NPO MULTILAYER, SURFACE-MOUNTED, SIZE 0805, NICKEL	ROHM ELECTRONICS LTD	MCH21-5A-681-JP
C98	26451/006	CAPACITOR-FIXED ALUMINIUM 22uF +/-20% 16V ELECTROLYTIC, SURFACE-MOUNTED, SIZE 5.3 x 5.3mm,	RUBYCON CAPACITORS	16-REV-22
C99	26451/006	CAPACITOR-FIXED ALUMINIUM 22uF +/-20% 16V ELECTROLYTIC, SURFACE-MOUNTED, SIZE 5.3 x 5.3mm,	RUBYCON CAPACITORS	16-REV-22
C100	26451/001	CAPACITOR-FIXED ALUMINIUM 1uF +/-20% 50V ELECTROLYTIC, SURFACE-MOUNTED, SIZE 4.3 x 4.3mm,	PANASONIC INDUSTRIAL	ECE-V-1HA-010R
C101	26386/777	CAPACITOR-FIXED CERAMIC 47nF +/-20% 63V X7R/2C1, MULTILAYER, SURFACE-MOUNTED, SIZE 1206, NICKEL	PHILIPS	1206-2R-473-K9-BBC
C102	26451/001	CAPACITOR-FIXED ALUMINIUM 1uF +/-20% 50V ELECTROLYTIC, SURFACE-MOUNTED, SIZE 4.3 x 4.3mm,	PANASONIC INDUSTRIAL	ECE-V-1HA-010R
C103	26386/777	CAPACITOR-FIXED CERAMIC 47nF +/-20% 63V X7R/2C1, MULTILAYER, SURFACE-MOUNTED, SIZE 1206, NICKEL	PHILIPS	1206-2R-473-K9-BBC
C104	26386/863	CAPACITOR-FIXED CERAMIC 1nF +/-10% 50V X7R/2C1, MULTILAYER, SURFACE-MOUNTED, SIZE 0805, NICKEL	ROHM ELECTRONICS LTD	MCH21-5C-102-KP
C105	26386/777	CAPACITOR-FIXED CERAMIC 47nF +/-20% 63V X7R/2C1, MULTILAYER, SURFACE-MOUNTED, SIZE 1206, NICKEL	PHILIPS	1206-2R-473-K9-BBC
C106	26386/863	CAPACITOR-FIXED CERAMIC 1nF +/-10% 50V X7R/2C1, MULTILAYER, SURFACE-MOUNTED, SIZE 0805, NICKEL	ROHM ELECTRONICS LTD	MCH21-5C-102-KP
C107	26386/777	CAPACITOR-FIXED CERAMIC 47nF +/-20% 63V X7R/2C1, MULTILAYER, SURFACE-MOUNTED, SIZE 1206, NICKEL	PHILIPS	1206-2R-473-K9-BBC
C108	26386/863	CAPACITOR-FIXED CERAMIC 1nF +/-10% 50V X7R/2C1, MULTILAYER, SURFACE-MOUNTED, SIZE 0805, NICKEL	ROHM ELECTRONICS LTD	MCH21-5C-102-KP
C109	26386/777	CAPACITOR-FIXED CERAMIC 47nF +/-20% 63V X7R/2C1, MULTILAYER, SURFACE-MOUNTED, SIZE 1206, NICKEL	PHILIPS	1206-2R-473-K9-BBC
C110	26386/863	CAPACITOR-FIXED CERAMIC 1nF +/-10% 50V X7R/2C1, MULTILAYER, SURFACE-MOUNTED, SIZE 0805, NICKEL	ROHM ELECTRONICS LTD	MCH21-5C-102-KP
C111	26386/863	CAPACITOR-FIXED CERAMIC 1nF +/-10% 50V X7R/2C1, MULTILAYER, SURFACE-MOUNTED, SIZE 0805, NICKEL	ROHM ELECTRONICS LTD	MCH21-5C-102-KP
C112	26386/777	CAPACITOR-FIXED CERAMIC 47nF +/-20% 63V X7R/2C1, MULTILAYER, SURFACE-MOUNTED, SIZE 1206, NICKEL	PHILIPS	1206-2R-473-K9-BBC
C113	26386/863	CAPACITOR-FIXED CERAMIC 1nF +/-10% 50V X7R/2C1, MULTILAYER, SURFACE-MOUNTED, SIZE 0805, NICKEL	ROHM ELECTRONICS LTD	MCH21-5C-102-KP
C114	26386/777	CAPACITOR-FIXED CERAMIC 47nF +/-20% 63V X7R/2C1, MULTILAYER, SURFACE-MOUNTED, SIZE 1206, NICKEL	PHILIPS	1206-2R-473-K9-BBC
C115	26386/777	CAPACITOR-FIXED CERAMIC 47nF +/-20% 63V X7R/2C1, MULTILAYER, SURFACE-MOUNTED, SIZE 1206, NICKEL	PHILIPS	1206-2R-473-K9-BBC
C120	26386/863	CAPACITOR-FIXED CERAMIC 1nF +/-10% 50V X7R/2C1, MULTILAYER, SURFACE-MOUNTED, SIZE 0805, NICKEL	ROHM ELECTRONICS LTD	MCH21-5C-102-KP
C121	26386/777	CAPACITOR-FIXED CERAMIC 47nF +/-20% 63V X7R/2C1, MULTILAYER, SURFACE-MOUNTED, SIZE 1206, NICKEL	PHILIPS	1206-2R-473-K9-BBC
C122	26386/777	CAPACITOR-FIXED CERAMIC 47nF +/-20% 63V X7R/2C1, MULTILAYER, SURFACE-MOUNTED, SIZE 1206, NICKEL	PHILIPS	1206-2R-473-K9-BBC
C123	26386/863	CAPACITOR-FIXED CERAMIC 1nF +/-10% 50V X7R/2C1, MULTILAYER, SURFACE-MOUNTED, SIZE 0805, NICKEL	ROHM ELECTRONICS LTD	MCH21-5C-102-KP
C126	26386/777	CAPACITOR-FIXED CERAMIC 47nF +/-20% 63V X7R/2C1, MULTILAYER, SURFACE-MOUNTED, SIZE 1206, NICKEL	PHILIPS	1206-2R-473-K9-BBC
C127	26386/824	CAPACITOR-FIXED CERAMIC 100pF +/-5% 50V NP0 MULTILAYER, SURFACE-MOUNTED, SIZE 0805, NICKEL	ROHM ELECTRONICS LTD	MCH21-5A-101-JP

Audio processor B1/2 (contd.)

Cir. Ref.	MI part number	Description	Manufacturer	Manufacturer's part number
C128	26386/824	CAPACITOR-FIXED CERAMIC 100pF +/-5% 50V NP0 MULTILAYER, SURFACE-MOUNTED, SIZE 0805, NICKEL	ROHM ELECTRONICS LTD	MCH21-5A-101-JP
C129	26386/808	CAPACITOR-FIXED CERAMIC 4.7pF +/-0.5pF 50V NPO MULTILAYER, SURFACE-MOUNTED, SIZE 0805, NICKEL	ROHM ELECTRONICS LTD	MCH21-5A-4R7-DP
C130	26386/777	CAPACITOR-FIXED CERAMIC 47nF +/-20% 63V X7R/2C1, MULTILAYER, SURFACE-MOUNTED, SIZE 1206, NICKEL	PHILIPS	1206-2R-473-K9-BBC
C131 to C133	26386/863	CAPACITOR-FIXED CERAMIC 1nF +/-10% 50V X7R/2C1, MULTILAYER, SURFACE-MOUNTED, SIZE 0805, NICKEL	ROHM ELECTRONICS LTD	MCH21-5C-102-KP
C134 to C136	26386/777	CAPACITOR-FIXED CERAMIC 47nF +/-20% 63V X7R/2C1, MULTILAYER, SURFACE-MOUNTED, SIZE 1206, NICKEL	PHILIPS	1206-2R-473-K9-BBC
C137	26386/899	CAPACITOR-FIXED CERAMIC 100nF +/-10% 50V X7R/2C1, MULTILAYER, SURFACE-MOUNTED, SIZE 1206, NICKEL	ROHM ELECTRONICS LTD	MCH31-5C-104-KP
C138	26386/899	CAPACITOR-FIXED CERAMIC 100nF +/-10% 50V X7R/2C1, MULTILAYER, SURFACE-MOUNTED, SIZE 1206, NICKEL	ROHM ELECTRONICS LTD	MCH31-5C-104-KP
C140	26582/432	CAPACITOR-FIXED POLYESTER 1uF +/-10% 50V 330 ppm/DEG.C, RADIAL, 5mm PWP, (TAPED).	VISHAY COMPONENTS	MKT-1826-510/065
C141	26386/899	CAPACITOR-FIXED CERAMIC 100nF +/-10% 50V X7R/2C1, MULTILAYER, SURFACE-MOUNTED, SIZE 1206, NICKEL	ROHM ELECTRONICS LTD	MCH31-5C-104-KP
C142	26386/760	CAPACITOR-FIXED CERAMIC 220nF +/-10% 50V X7R MULTILAYER, SURFACE-MOUNTED, SIZE 1210, NICKEL	PHILIPS	1210-2R-224-K9-BBC
C144	26451/003	CAPACITOR-FIXED ALUMINIUM 10uF +/-20% 16V ELECTROLYTIC, SURFACE-MOUNTED, SIZE 4.3 x 4.3mm,	PANASONIC INDUSTRIAL	ECE-V-1CA-100R
C150	26386/824	CAPACITOR-FIXED CERAMIC 100pF +/-5% 50V NP0 MULTILAYER, SURFACE-MOUNTED, SIZE 0805, NICKEL	ROHM ELECTRONICS LTD	MCH21-5A-101-JP
C151	26386/824	CAPACITOR-FIXED CERAMIC 100pF +/-5% 50V NP0 MULTILAYER, SURFACE-MOUNTED, SIZE 0805, NICKEL	ROHM ELECTRONICS LTD	MCH21-5A-101-JP
C152	26386/777	CAPACITOR-FIXED CERAMIC 47nF +/-20% 63V X7R/2C1, MULTILAYER, SURFACE-MOUNTED, SIZE 1206, NICKEL	PHILIPS	1206-2R-473-K9-BBC
C153	26386/863	CAPACITOR-FIXED CERAMIC 1nF +/-10% 50V X7R/2C1, MULTILAYER, SURFACE-MOUNTED, SIZE 0805, NICKEL	ROHM ELECTRONICS LTD	MCH21-5C-102-KP
C154	26386/827	CAPACITOR-FIXED CERAMIC 180pF +/-5% 50V NP0 MULTILAYER, SURFACE-MOUNTED, SIZE 0805, NICKEL	ROHM ELECTRONICS LTD	MCH21-5A-181-JP
C155	26386/830	CAPACITOR-FIXED CERAMIC 330pF +/-5% 50V NP0 MULTILAYER, SURFACE-MOUNTED, SIZE 0805, NICKEL	ROHM ELECTRONICS LTD	MCH21-5A-331-JP
C156	26386/777	CAPACITOR-FIXED CERAMIC 47nF +/-20% 63V X7R/2C1, MULTILAYER, SURFACE-MOUNTED, SIZE 1206, NICKEL	PHILIPS	1206-2R-473-K9-BBC
C157	26386/899	CAPACITOR-FIXED CERAMIC 100nF +/-10% 50V X7R/2C1, MULTILAYER, SURFACE-MOUNTED, SIZE 1206, NICKEL	ROHM ELECTRONICS LTD	MCH31-5C-104-KP
C158	26386/899	CAPACITOR-FIXED CERAMIC 100nF +/-10% 50V X7R/2C1, MULTILAYER, SURFACE-MOUNTED, SIZE 1206, NICKEL	ROHM ELECTRONICS LTD	MCH31-5C-104-KP
C160	26386/777	CAPACITOR-FIXED CERAMIC 47nF +/-20% 63V X7R/2C1, MULTILAYER, SURFACE-MOUNTED, SIZE 1206, NICKEL	PHILIPS	1206-2R-473-K9-BBC
C161	26386/826	CAPACITOR-FIXED CERAMIC 150pF +/-5% 50V NPO MULTILAYER, SURFACE-MOUNTED, SIZE 0805, NICKEL	ROHM ELECTRONICS LTD	MCH21-5A-151-JP
C162	26386/824	CAPACITOR-FIXED CERAMIC 100pF +/-5% 50V NP0 MULTILAYER, SURFACE-MOUNTED, SIZE 0805, NICKEL	ROHM ELECTRONICS LTD	MCH21-5A-101-JP
C163	26386/830	CAPACITOR-FIXED CERAMIC 330pF +/-5% 50V NP0 MULTILAYER, SURFACE-MOUNTED, SIZE 0805, NICKEL	ROHM ELECTRONICS LTD	MCH21-5A-331-JP
C164	26386/824	CAPACITOR-FIXED CERAMIC 100pF +/-5% 50V NP0 MULTILAYER, SURFACE-MOUNTED, SIZE 0805, NICKEL	ROHM ELECTRONICS LTD	MCH21-5A-101-JP
C165	26386/777	CAPACITOR-FIXED CERAMIC 47nF +/-20% 63V X7R/2C1, MULTILAYER, SURFACE-MOUNTED, SIZE 1206, NICKEL	PHILIPS	1206-2R-473-K9-BBC

Cir. Ref.	MI part number	Description	Manufacturer	Manufacturer's part number
Audio processor B1/2 (contd.)				
C166	26451/010	CAPACITOR-FIXED ALUMINIUM 100uF +/-20% 6.3V ELECTROLYTIC, SURFACE-MOUNTED, SIZE 6.6 x 6.6mm,	PANASONIC INDUSTRIAL	ECE-V-0JA-101P
C167	26343/435	CAPACITOR-FIXED CERAMIC 220pF +/-2% 63V N750 SINGLELAYER, RADIAL, 2.5mm PWP, (TAPED).	VISHAY COMPONENTS	ROU-221-GAK-ACR-J
C168	26343/435	CAPACITOR-FIXED CERAMIC 220pF +/-2% 63V N750 SINGLELAYER, RADIAL, 2.5mm PWP, (TAPED).	VISHAY COMPONENTS	ROU-221-GAK-ACR-J
C169	26386/760	CAPACITOR-FIXED CERAMIC 220nF +/-10% 50V X7R MULTILAYER, SURFACE-MOUNTED, SIZE 1210, NICKEL	PHILIPS	1210-2R-224-K9-BBC
C170	26343/923	CAPACITOR-FIXED CERAMIC 1.5nF +/-1% 63V NP0 MULTILAYER, RADIAL, 5.08mm PWP, (TAPED).	VISHAY COMPONENTS	VP41-BA-152-FA
C171	26343/937	CAPACITOR-FIXED CERAMIC 5.6nF +/-1% 63V NP0 MULTILAYER, RADIAL, 5.08mm PWP, (TAPED).	VISHAY COMPONENTS	VP41-BA-562-FA
C172	26343/935	CAPACITOR-FIXED CERAMIC 4.7nF +/-1% 63V NP0 MULTILAYER, RADIAL, 5.08mm PWP, (TAPED).	VISHAY COMPONENTS	VP41-BA-472-FA
C175	26451/005	CAPACITOR-FIXED ALUMINIUM 22uF +/-20% 6.3V ELECTROLYTIC, SURFACE-MOUNTED, SIZE 4.3 x 4.3mm,	PANASONIC INDUSTRIAL	ECE-V-0JA-220R
C180	26386/899	CAPACITOR-FIXED CERAMIC 100nF +/-10% 50V X7R/2C1, MULTILAYER, SURFACE-MOUNTED, SIZE 1206, NICKEL	ROHM ELECTRONICS LTD	MCH31-5C-104-KP
C181	26386/899	CAPACITOR-FIXED CERAMIC 100nF +/-10% 50V X7R/2C1, MULTILAYER, SURFACE-MOUNTED, SIZE 1206, NICKEL	ROHM ELECTRONICS LTD	MCH31-5C-104-KP
C182	26343/943	CAPACITOR-FIXED CERAMIC 10nF +/-1% 50V NP0 MULTILAYER, RADIAL, 5.08mm PWP, (LOOSE OR TAPED).	VISHAY COMPONENTS	VP43-BA-103-FA
C183	26343/911	CAPACITOR-FIXED CERAMIC 470pF +/-1% 63V NP0 MULTILAYER, RADIAL, 5.08mm PWP, (TAPED).	VISHAY COMPONENTS	VP41-BA-471-FA
C184	26343/438	CAPACITOR-FIXED CERAMIC 120pF +/-2% 63V N150 SINGLELAYER, RADIAL, 2.5mm PWP, (TAPED).	VISHAY COMPONENTS	ROP-121-GAK-ACR-J
C186	26343/917	CAPACITOR-FIXED CERAMIC 820pF +/-1% 63V NP0 MULTILAYER, RADIAL, 5.08mm PWP, (TAPED).	VISHAY COMPONENTS	VP41-BA-821-FA
C187	26386/760	CAPACITOR-FIXED CERAMIC 220nF +/-10% 50V X7R MULTILAYER, SURFACE-MOUNTED, SIZE 1210, NICKEL	PHILIPS	1210-2R-224-K9-BBC
C188	26386/875	CAPACITOR-FIXED CERAMIC 10nF +/-10% 50V X7R/2C1, MULTILAYER, SURFACE-MOUNTED, SIZE 0805, NICKEL	ROHM ELECTRONICS LTD	MCH21-5C-103-KP
C189	26386/875	CAPACITOR-FIXED CERAMIC 10nF +/-10% 50V X7R/2C1, MULTILAYER, SURFACE-MOUNTED, SIZE 0805, NICKEL	ROHM ELECTRONICS LTD	MCH21-5C-103-KP
C191	26386/992	CAPACITOR-FIXED CERAMIC 330nF +/-10% 50V X7R, MULTILAYER, SURFACE-MOUNTED, SIZE 1812, NICKEL	PHILIPS	1812-2B-334-K9BB
C200	26386/899	CAPACITOR-FIXED CERAMIC 100nF +/-10% 50V X7R/2C1, MULTILAYER, SURFACE-MOUNTED, SIZE 1206, NICKEL	ROHM ELECTRONICS LTD	MCH31-5C-104-KP
C201	26386/800	CAPACITOR-FIXED CERAMIC 1pF +/-0.5pF 50V NP0 MULTILAYER, SURFACE-MOUNTED, SIZE 0805, NICKEL	ROHM ELECTRONICS LTD	MCH21-5A-1R0-DP
C202	26386/875	CAPACITOR-FIXED CERAMIC 10nF +/-10% 50V X7R/2C1, MULTILAYER, SURFACE-MOUNTED, SIZE 0805, NICKEL	ROHM ELECTRONICS LTD	MCH21-5C-103-KP
C204	26451/006	CAPACITOR-FIXED ALUMINIUM 22uF +/-20% 16V ELECTROLYTIC, SURFACE-MOUNTED, SIZE 5.3 x 5.3mm,	RUBYCON CAPACITORS	16-REV-22
C205	26451/006	CAPACITOR-FIXED ALUMINIUM 22uF +/-20% 16V ELECTROLYTIC, SURFACE-MOUNTED, SIZE 5.3 x 5.3mm,	RUBYCON CAPACITORS	16-REV-22
C210	26451/010	CAPACITOR-FIXED ALUMINIUM 100uF +/-20% 6.3V ELECTROLYTIC, SURFACE-MOUNTED, SIZE 6.6 x 6.6mm,	PANASONIC INDUSTRIAL	ECE-V-0JA-101P
C211	26451/010	CAPACITOR-FIXED ALUMINIUM 100uF +/-20% 6.3V ELECTROLYTIC, SURFACE-MOUNTED, SIZE 6.6 x 6.6mm,	PANASONIC INDUSTRIAL	ECE-V-0JA-101P
C218	26386/816	CAPACITOR-FIXED CERAMIC 22pF +/-5% 50V NPO MULTILAYER, SURFACE-MOUNTED, SIZE 0805, NICKEL	ROHM ELECTRONICS LTD	MCH21-5A-220-JP

Cir. Ref.	MI part number	Description	Manufacturer	Manufacturer's part number
Audio processor B1/2 (contd.)				
C219	26386/816	CAPACITOR-FIXED CERAMIC 22pF +/-5% 50V NPO MULTILAYER, SURFACE-MOUNTED, SIZE 0805, NICKEL	ROHM ELECTRONICS LTD	MCH21-5A-220-JP
C220	26386/760	CAPACITOR-FIXED CERAMIC 220nF +/-10% 50V X7R MULTILAYER, SURFACE-MOUNTED, SIZE 1210, NICKEL	PHILIPS	1210-2R-224-K9-BBC
C221	26343/438	CAPACITOR-FIXED CERAMIC 120pF +/-2% 63V N150 SINGLELAYER, RADIAL, 2.5mm PWP, (TAPED).	VISHAY COMPONENTS	ROP-121-GAK-ACR-J
C222	26343/436	CAPACITOR-FIXED CERAMIC 270pF +/-2% 63V N750 SINGLELAYER, RADIAL, 2.5mm PWP, (TAPED).	VISHAY COMPONENTS	ROU-271-GAK-ACR-J
C230	26421/152	CAPACITOR-FIXED ALUMINIUM 220uF +/-20% 16V ELECTROLYTIC, RADIAL, 5mm PWP, 9mm MAX BODY DIA,	VISHAY COMPONENTS	EKS-00-CC-322-D-C0
C231	26421/152	CAPACITOR-FIXED ALUMINIUM 220uF +/-20% 16V ELECTROLYTIC, RADIAL, 5mm PWP, 9mm MAX BODY DIA,	VISHAY COMPONENTS	EKS-00-CC-322-D-C0
C232	26451/005	CAPACITOR-FIXED ALUMINIUM 22uF +/-20% 6.3V ELECTROLYTIC, SURFACE-MOUNTED, SIZE 4.3 x 4.3mm,	PANASONIC INDUSTRIAL	ECE-V-0JA-220R
C234 to C239	26386/899	CAPACITOR-FIXED CERAMIC 100nF +/-10% 50V X7R/2C1, MULTILAYER, SURFACE-MOUNTED, SIZE 1206, NICKEL	ROHM ELECTRONICS LTD	MCH31-5C-104-KP
C241	26421/153	CAPACITOR-FIXED ALUMINIUM 470uF +/-20% 6.3V ELECTROLYTIC, RADIAL, 5mm PWP, 9mm MAX BODY DIA,	VISHAY COMPONENTS	EKS-00-CC-347-C-C0
C242	26386/899	CAPACITOR-FIXED CERAMIC 100nF +/-10% 50V X7R/2C1, MULTILAYER, SURFACE-MOUNTED, SIZE 1206, NICKEL	ROHM ELECTRONICS LTD	MCH31-5C-104-KP
C243	26421/153	CAPACITOR-FIXED ALUMINIUM 470uF +/-20% 6.3V ELECTROLYTIC, RADIAL, 5mm PWP, 9mm MAX BODY DIA,	VISHAY COMPONENTS	EKS-00-CC-347-C-C0
C244	26386/899	CAPACITOR-FIXED CERAMIC 100nF +/-10% 50V X7R/2C1, MULTILAYER, SURFACE-MOUNTED, SIZE 1206, NICKEL	ROHM ELECTRONICS LTD	MCH31-5C-104-KP
C250 to C255	26386/875	CAPACITOR-FIXED CERAMIC 10nF +/-10% 50V X7R/2C1, MULTILAYER, SURFACE-MOUNTED, SIZE 0805, NICKEL	ROHM ELECTRONICS LTD	MCH21-5C-103-KP
C260	26386/816	CAPACITOR-FIXED CERAMIC 22pF +/-5% 50V NPO MULTILAYER, SURFACE-MOUNTED, SIZE 0805, NICKEL	ROHM ELECTRONICS LTD	MCH21-5A-220-JP
C261 to C264	26343/935	CAPACITOR-FIXED CERAMIC 4.7nF +/-1% 63V NP0 MULTILAYER, RADIAL, 5.08mm PWP, (TAPED).	VISHAY COMPONENTS	VP41-BA-472-FA
C265	26386/760	CAPACITOR-FIXED CERAMIC 220nF +/-10% 50V X7R MULTILAYER, SURFACE-MOUNTED, SIZE 1210, NICKEL	PHILIPS	1210-2R-224-K9-BBC
C267	26451/010	CAPACITOR-FIXED ALUMINIUM 100uF +/-20% 6.3V ELECTROLYTIC, SURFACE-MOUNTED, SIZE 6.6 x 6.6mm,	PANASONIC INDUSTRIAL	ECE-V-0JA-101P
C268	26386/818	CAPACITOR-FIXED CERAMIC 33pF +/-5% 50V NP0 MULTILAYER, SURFACE-MOUNTED, SIZE 0805, NICKEL	ROHM ELECTRONICS LTD	MCH21-5A-330-JP
C269	26386/816	CAPACITOR-FIXED CERAMIC 22pF +/-5% 50V NPO MULTILAYER, SURFACE-MOUNTED, SIZE 0805, NICKEL	ROHM ELECTRONICS LTD	MCH21-5A-220-JP
C270	26343/788	CAPACITOR-FIXED CERAMIC 680pF +/-5% 50V NPO MULTILAYER, SURFACE-MOUNTED, SIZE 0805, NICKEL	ROHM ELECTRONICS LTD	MCH21-5A-681-JP
C271 to C278	26386/875	CAPACITOR-FIXED CERAMIC 10nF +/-10% 50V X7R/2C1, MULTILAYER, SURFACE-MOUNTED, SIZE 0805, NICKEL	ROHM ELECTRONICS LTD	MCH21-5C-103-KP
C279	26386/867	CAPACITOR-FIXED CERAMIC 2.2nF +/-10% 50V X7R/2C1, MULTILAYER, SURFACE-MOUNTED, SIZE 0805, NICKEL	ROHM ELECTRONICS LTD	MCH21-5C-222-KP
C280	26582/426	CAPACITOR-FIXED POLYESTER 10nF +/-10% 63V 330 ppm/DEG.C, RADIAL, 5mm PWP, (TAPED).	DUBILIER CAPACITORS	MMP-10nF-K-63V-T/R
C281	26582/440	CAPACITOR-FIXED POLYESTER 4.7nF +/-10% 63V 330 ppm/DEG.C, RADIAL, 5mm PWP, (TAPED).	DUBILIER CAPACITORS	MMP-4.7nF-K-63V-T/R
C282 to C287	26343/943	CAPACITOR-FIXED CERAMIC 10nF +/-1% 50V NP0 MULTILAYER, RADIAL, 5.08mm PWP, (LOOSE OR TAPED).	VISHAY COMPONENTS	VP43-BA-103-FA
C288	26343/921	CAPACITOR-FIXED CERAMIC 1.2nF +/-1% 63V NP0 MULTILAYER, RADIAL, 5.08mm PWP, (TAPED).	VISHAY COMPONENTS	VP41-BA-122-FA

Cir. Ref.	MI part number	Description	Manufacturer	Manufacturer's part number
Audio processor B1/2 (contd.)				
C289	26386/881	CAPACITOR-FIXED CERAMIC 33nF +/-10% 50V X7R/2C1, MULTILAYER, SURFACE-MOUNTED, SIZE 1210, NICKEL	ROHM ELECTRONICS LTD	MCH32-5C-333-KP
C290	26386/832	CAPACITOR-FIXED CERAMIC 470pF +/-5% 50V NPO MULTILAYER, SURFACE-MOUNTED, SIZE 0805, NICKEL	ROHM ELECTRONICS LTD	MCH21-5A-471-JP
C291	26386/877	CAPACITOR-FIXED CERAMIC 15nF +/-10% 50V X7R/2C1, MULTILAYER, SURFACE-MOUNTED, SIZE 0805, NICKEL	ROHM ELECTRONICS LTD	MCH21-5C-153-KP
C292	26386/875	CAPACITOR-FIXED CERAMIC 10nF +/-10% 50V X7R/2C1, MULTILAYER, SURFACE-MOUNTED, SIZE 0805, NICKEL	ROHM ELECTRONICS LTD	MCH21-5C-103-KP
C293	26386/865	CAPACITOR-FIXED CERAMIC 1.5nF +/-10% 50V X7R/2C1, MULTILAYER, SURFACE-MOUNTED, SIZE 0805, NICKEL	ROHM ELECTRONICS LTD	MCH21-5C-152-KP
C294	26386/863	CAPACITOR-FIXED CERAMIC 1nF +/-10% 50V X7R/2C1, MULTILAYER, SURFACE-MOUNTED, SIZE 0805, NICKEL	ROHM ELECTRONICS LTD	MCH21-5C-102-KP
C295	26386/759	CAPACITOR-FIXED CERAMIC 22nF +/-20% 50V X7R/2C1, MULTILAYER, SURFACE-MOUNTED, SIZE 1206, NICKEL	PHILIPS	1206-2R-223-K9-BBC
C296	26386/863	CAPACITOR-FIXED CERAMIC 1nF +/-10% 50V X7R/2C1, MULTILAYER, SURFACE-MOUNTED, SIZE 0805, NICKEL	ROHM ELECTRONICS LTD	MCH21-5C-102-KP
C297	26386/863	CAPACITOR-FIXED CERAMIC 1nF +/-10% 50V X7R/2C1, MULTILAYER, SURFACE-MOUNTED, SIZE 0805, NICKEL	ROHM ELECTRONICS LTD	MCH21-5C-102-KP
C298	26451/003	CAPACITOR-FIXED ALUMINIUM 10uF +/-20% 16V ELECTROLYTIC, SURFACE-MOUNTED, SIZE 4.3 x 4.3mm,	PANASONIC INDUSTRIAL	ECE-V-1CA-100R
C299	26386/760	CAPACITOR-FIXED CERAMIC 220nF +/-10% 50V X7R MULTILAYER, SURFACE-MOUNTED, SIZE 1210, NICKEL	PHILIPS	1210-2R-224-K9-BBC
C300	26386/777	CAPACITOR-FIXED CERAMIC 47nF +/-20% 63V X7R/2C1, MULTILAYER, SURFACE-MOUNTED, SIZE 1206, NICKEL	PHILIPS	1206-2R-473-K9-BBC
C301	26386/875	CAPACITOR-FIXED CERAMIC 10nF +/-10% 50V X7R/2C1, MULTILAYER, SURFACE-MOUNTED, SIZE 0805, NICKEL	ROHM ELECTRONICS LTD	MCH21-5C-103-KP
C302	26421/153	CAPACITOR-FIXED ALUMINIUM 470uF +/-20% 6.3V ELECTROLYTIC, RADIAL, 5mm PWP, 9mm MAX BODY DIA,	VISHAY COMPONENTS	EKS-00-CC-347-C-C0
C303	26451/010	CAPACITOR-FIXED ALUMINIUM 100uF +/-20% 6.3V ELECTROLYTIC, SURFACE-MOUNTED, SIZE 6.6 x 6.6mm,	PANASONIC INDUSTRIAL	ECE-V-0JA-101P
C304	26421/153	CAPACITOR-FIXED ALUMINIUM 470uF +/-20% 6.3V ELECTROLYTIC, RADIAL, 5mm PWP, 9mm MAX BODY DIA,	VISHAY COMPONENTS	EKS-00-CC-347-C-C0
C305	26386/899	CAPACITOR-FIXED CERAMIC 100nF +/-10% 50V X7R/2C1, MULTILAYER, SURFACE-MOUNTED, SIZE 1206, NICKEL	ROHM ELECTRONICS LTD	MCH31-5C-104-KP
C306	26386/899	CAPACITOR-FIXED CERAMIC 100nF +/-10% 50V X7R/2C1, MULTILAYER, SURFACE-MOUNTED, SIZE 1206, NICKEL	ROHM ELECTRONICS LTD	MCH31-5C-104-KP
C307	26451/005	CAPACITOR-FIXED ALUMINIUM 22uF +/-20% 6.3V ELECTROLYTIC, SURFACE-MOUNTED, SIZE 4.3 x 4.3mm,	PANASONIC INDUSTRIAL	ECE-V-0JA-220R
C308	26386/875	CAPACITOR-FIXED CERAMIC 10nF +/-10% 50V X7R/2C1, MULTILAYER, SURFACE-MOUNTED, SIZE 0805, NICKEL	ROHM ELECTRONICS LTD	MCH21-5C-103-KP
C309	26386/867	CAPACITOR-FIXED CERAMIC 2.2nF +/-10% 50V X7R/2C1, MULTILAYER, SURFACE-MOUNTED, SIZE 0805, NICKEL	ROHM ELECTRONICS LTD	MCH21-5C-222-KP
C310 to C314	26386/875	CAPACITOR-FIXED CERAMIC 10nF +/-10% 50V X7R/2C1, MULTILAYER, SURFACE-MOUNTED, SIZE 0805, NICKEL	ROHM ELECTRONICS LTD	MCH21-5C-103-KP
C367	26343/446	CAPACITOR-FIXED CERAMIC 180pF +/-2% 63V N750 SINGLELAYER, RADIAL, 2.5mm PWP, (TAPED).	VISHAY COMPONENTS	ROU-181-GAK-ACR-J
C368	26343/446	CAPACITOR-FIXED CERAMIC 180pF +/-2% 63V N750 SINGLELAYER, RADIAL, 2.5mm PWP, (TAPED).	VISHAY COMPONENTS	ROU-181-GAK-ACR-J
D1	28371/494	DIODE VOLTAGE REFERENCE, 1N825... 250mW 6.2V 5% 50mA 20ppm/DEG.C, AXIAL, DO-7, (TAPED).	PHILIPS	1N825

Cir. Ref.	MI part number	Description	Manufacturer	Manufacturer's part number
Audio processor B1/2 (contd.)				
D2	28357/030	DIODE RECTIFIER, 4004... 400V 1A 1.2Vf @ 1A, SURFACE MOUNTED, MELF, (12mmTAPE - 7"REEL).	ROHM ELECTRONICS LTD	RLR4004-TE23C
D3	28357/030	DIODE RECTIFIER, 4004... 400V 1A 1.2Vf @ 1A, SURFACE MOUNTED, MELF, (12mmTAPE - 7"REEL).	ROHM ELECTRONICS LTD	RLR4004-TE23C
D4	28371/494	DIODE VOLTAGE REFERENCE, 1N825... 250mW 6.2V 5% 50mA 20ppm/DEG.C, AXIAL, DO-7, (TAPED).	PHILIPS	1N825
D40	28383/903	DIODE SMALL-SIGNAL, BAV99... DUAL, 70V 100mA 1.1Vf @ 50mA, IN SERIES, MARKING CODE A7, SURFACE	PHILIPS	BAV99 (A7)
D70	28383/934	DIODE SMALL-SIGNAL, LL4148... 500mW 50V 150mA 1Vf @ 10mA, SURFACE MOUNTED, MINI-MELF, (8mm TAPE -	PHILIPS	PMLL4148L
D71	28383/936	DIODE SMALL-SIGNAL, SCHOTTKY, LL103B... 300mW 30V 1A 0.7Vf @ 500mA, SURFACE MOUNTED, MINI-MELF, (8mm	SGS-THOMSON	TMMBAT48
D100 to D105	28383/932	DIODE PIN, HSMP-3810... 250mW 100V 1A 0.35pF Rs 4R0 MAX @ 100mA, MARKING CODE E0, LOW PROFILE,	HEWLETT-PACKARD	HSMP-3810-L31
D106 to D111	28383/933	DIODE BAND SWITCHING, BA582... 35V 100mA 1.1pF MAX @ 3V, SURFACE MOUNTED, SOD-123, (8mm TAPE -	PHILIPS	BB582
D150 to D182	28383/936	DIODE SMALL-SIGNAL, SCHOTTKY, LL103B... 300mW 30V 1A 0.7Vf @ 500mA, SURFACE MOUNTED, MINI-MELF, (8mm	SGS-THOMSON	TMMBAT48
D200 to D300	28383/934	DIODE SMALL-SIGNAL, LL4148... 500mW 50V 150mA 1Vf @ 10mA, SURFACE MOUNTED, MINI-MELF, (8mm TAPE -	PHILIPS	PMLL4148L
IC1	28469/638	IC-DIGITAL ARRAY-LOGIC AMI6703-012... AUDIO SYNTHESIZER TO MI CUSTOM SPEC, CMOS, 68 PIN, PLCC.	AMERICAN MICROSYSTEM	AMI6703-012
IC2	28469/638	IC-DIGITAL ARRAY-LOGIC AMI6703-012... AUDIO SYNTHESIZER TO MI CUSTOM SPEC, CMOS, 68 PIN, PLCC.	AMERICAN MICROSYSTEM	AMI6703-012
IC3	44533/434	IC PROGRAMMED EPROM. 1 OF SET OF 2	MARCONI INSTRUMENTS LTD	
IC4	44533/435	IC PROGRAMMED EPROM. 2 OF SET OF 2	MARCONI INSTRUMENTS LTD	
IC5	28461/005	IC-ANALOGUE D/A-CONVERTER 7524... 15V 8 BIT, BUFFERED, MULTIPLYING, REL-ACC +/-1/2LSB, GAIN-ERR	ANALOG DEVICES LTD	PM7524FS
IC6	28461/005	IC-ANALOGUE D/A-CONVERTER 7524... 15V 8 BIT, BUFFERED, MULTIPLYING, REL-ACC +/-1/2LSB, GAIN-ERR	ANALOG DEVICES LTD	PM7524FS
IC7	28462/638	IC-DIGITAL FLIP-FLOP/D-TYPE 74HC74... 2 BIT, DUAL, POS EDGE TRIGGER, PLUS SET & CLEAR, CMOS-H/SPEED,	PHILIPS	74HC74D
IC8	28466/390	IC-DIGITAL NAND-GATE 74HC00... 2 INPUT, QUAD, CMOS-H/SPEED, 14 PIN, SMALL-OUTLINE.	PHILIPS	74HC00D
IC9	28461/437	IC-ANALOGUE OPERATIONAL AMP 5534... 2 INPUT, SINGLE, 10V 16mA LOW NOISE, 10MHz, BIPOLAR, 8 PIN,	PHILIPS	NE5534D
IC10	28461/437	IC-ANALOGUE OPERATIONAL AMP 5534... 2 INPUT, SINGLE, 10V 16mA LOW NOISE, 10MHz, BIPOLAR, 8 PIN,	PHILIPS	NE5534D
IC11	28461/413	IC-ANALOGUE OPERATIONAL AMP TL074... QUAD, JFET INPUT, LOW NOISE, SLEW RATE 8V/uS MIN, GAIN	MOTOROLA INC.	TL074CD
IC12	28461/412	IC-ANALOGUE OPERATIONAL AMP TL072... DUAL, 18V UNITY GAIN BNDWDTH 3MHz, OFFSET VOLTAGE 10mV, SLEW	MOTOROLA INC.	TL072CD
IC13	28461/999	IC-ANALOGUE SWITCH DG441... QUAD, 15V SPST, ON-RESISTANCE<85R, 4 x N/O @ LOGIC 1, TTL	TEMIC UK LTD	DG441DY
IC15	28461/846	IC-ANALOGUE D/A-CONVERTER 7545... 15V 12 BIT, BUFFERED, MULTIPLYING, REL-ACC +/-1 LSB, GAIN-ERR	ANALOG DEVICES LTD	AD7545AKR
IC16	28461/846	IC-ANALOGUE D/A-CONVERTER 7545... 15V 12 BIT, BUFFERED, MULTIPLYING, REL-ACC +/-1 LSB, GAIN-ERR	ANALOG DEVICES LTD	AD7545AKR
IC17	28461/413	IC-ANALOGUE OPERATIONAL AMP TL074... QUAD, JFET INPUT, LOW NOISE, SLEW RATE 8V/uS MIN, GAIN	MOTOROLA INC.	TL074CD

Cir. Ref.	MI part number	Description	Manufacturer	Manufacturer's part number
Audio processor B1/2 (contd.)				
IC18	28461/845	IC-ANALOGUE SWITCH 74HC4316... QUAD, BILATERAL, WITH COMMON ENABLE, CMOS-H/SPEED, 16 PIN,	PHILIPS	74HC4316D
IC19	28461/495	IC-ANALOGUE AUDIO-AMPLIFIER TDA2030... SINGLE, 28V 14W, MONOLITHIC, 5 PIN, TO-220.	SGS-THOMSON	TDA2030H
IC20	28461/846	IC-ANALOGUE D/A-CONVERTER 7545... 15V 12 BIT, BUFFERED, MULTIPLYING, REL-ACC +/-1 LSB, GAIN-ERR	ANALOG DEVICES LTD	AD7545AKR
IC21	28461/413	IC-ANALOGUE OPERATIONAL AMP TL074... QUAD, JFET INPUT, LOW NOISE, SLEW RATE 8V/uS MIN, GAIN	MOTOROLA INC.	TL074CD
IC22	28461/999	IC-ANALOGUE SWITCH DG441... QUAD, 15V SPST, ON-RESISTANCE<85R, 4 x N/O @ LOGIC 1, TTL	TEMIC UK LTD	DG441DY
IC23	28461/413	IC-ANALOGUE OPERATIONAL AMP TL074... QUAD, JFET INPUT, LOW NOISE, SLEW RATE 8V/uS MIN, GAIN	MOTOROLA INC.	TL074CD
IC24	28461/999	IC-ANALOGUE SWITCH DG441... QUAD, 15V SPST, ON-RESISTANCE<85R, 4 x N/O @ LOGIC 1, TTL	TEMIC UK LTD	DG441DY
IC25	28461/846	IC-ANALOGUE D/A-CONVERTER 7545... 15V 12 BIT, BUFFERED, MULTIPLYING, REL-ACC +/-1 LSB, GAIN-ERR	ANALOG DEVICES LTD	AD7545AKR
IC26	28461/413	IC-ANALOGUE OPERATIONAL AMP TL074... QUAD, JFET INPUT, LOW NOISE, SLEW RATE 8V/uS MIN, GAIN	MOTOROLA INC.	TL074CD
IC27	28461/846	IC-ANALOGUE D/A-CONVERTER 7545... 15V 12 BIT, BUFFERED, MULTIPLYING, REL-ACC +/-1 LSB, GAIN-ERR	ANALOG DEVICES LTD	AD7545AKR
IC28	28461/005	IC-ANALOGUE D/A-CONVERTER 7524... 15V 8 BIT, BUFFERED, MULTIPLYING, REL-ACC +/-1/2LSB, GAIN-ERR	ANALOG DEVICES LTD	PM7524FS
IC29	28461/999	IC-ANALOGUE SWITCH DG441... QUAD, 15V SPST, ON-RESISTANCE<85R, 4 x N/O @ LOGIC 1, TTL	TEMIC UK LTD	DG441DY
IC50	28462/157	IC-DIGITAL FLIP-FLOP/D-TYPE 74HC377... OCTAL, POS EDGE TRIGGER WITH DATA ENABLE, CMOS-H/SPEED, 20	PHILIPS	74HC377D
IC52	28465/055	IC-DIGITAL DECODER/DEMULTIPLEX 74HC138... 3 INPUT, 8 BIT, SINGLE, INVERTING, 3 BIT ADDRESS,	PHILIPS	74HC138D
IC53	28465/055	IC-DIGITAL DECODER/DEMULTIPLEX 74HC138... 3 INPUT, 8 BIT, SINGLE, INVERTING, 3 BIT ADDRESS,	PHILIPS	74HC138D
IC54	28469/057	IC-DIGITAL INVERTER 74HC04... HEX, CMOS-H/SPEED, 14 PIN, SMALL-OUTLINE.	PHILIPS	74HC04D
IC55 to IC58	28462/157	IC-DIGITAL FLIP-FLOP/D-TYPE 74HC377... OCTAL, POS EDGE TRIGGER WITH DATA ENABLE, CMOS-H/SPEED, 20	PHILIPS	74HC377D
IC60	28461/774	IC-ANALOGUE VOLTAGE-REGULATOR 78L05AC... 5V +/-5%, POSITIVE, LINEAR, BIPOLAR, 8 PIN, SMALL-OUTLINE.	NAT. SEMICONDUCTOR	LM78L05ACM
IC61	28461/780	IC-ANALOGUE VOLTAGE-REGULATOR 79L05AC... 5V 100mA NEGATIVE, LINEAR, 5% REGULATION, MONOLITHIC, 8	NAT. SEMICONDUCTOR	LM79L05ACM
IC70	28461/412	IC-ANALOGUE OPERATIONAL AMP TL072... DUAL, 18V UNITY GAIN BNDWDTH 3MHz, OFFSET VOLTAGE 10mV, SLEW	MOTOROLA INC.	TL072CD
IC71	28461/421	IC-ANALOGUE VOICE-AMPLIFIER SL6270C... SINGLE, 9V 5mA GAIN CONTROLLED PREAMPLIFIER, CMOS, 8 PIN,		
IC100	28461/431	IC-ANALOGUE VIDEO DIFF AMPLIFIER 592... 2 INPUT, SINGLE, 8V BANDWDTH-x1 120MHz TYP, GAIN 0 TO 400,	PHILIPS	NE592D8
IC101	28461/844	IC-ANALOGUE MODULATR/DEMODULATOR 1496... 30V BALANCED, SUPPRESSION 50dB @ 10MHz, 3dB SIGNAL	NAT. SEMICONDUCTOR	LM1496M
IC102	28461/532	IC-ANALOGUE OPERATIONAL AMP TBA120T... FM-IF WITH DEMODULATOR, BIPOLAR, 14 PIN, DUAL-IN-LINE.		
IC103	28461/459	IC-ANALOGUE OPERATIONAL AMP TL032... DUAL, 15V U/GAIN BANDWDTH 1.1MHz, OFFSET VOLTAGE 2.0mV, SLEW	TEXAS INSTRUMENTS	TL032CD(TUBE)
IC104	28466/390	IC-DIGITAL NAND-GATE 74HC00... 2 INPUT, QUAD, CMOS-H/SPEED, 14 PIN, SMALL-OUTLINE.	PHILIPS	74HC00D

Audio processor B1/2 (contd.)

Cir. Ref.	MI part number	Description	Manufacturer	Manufacturer's part number
IC105	28466/414	IC-DIGITAL EXCLUSIVE-OR 74HC86... 2 INPUT, QUAD, CMOS-H/SPEED, 14 PIN, SMALL-OUTLINE.	PHILIPS	74HC86D
IC106	28469/032	IC-DIGITAL INVERTER 74HC14... HEX, SCHMITT-TRIGGER OPERATION, CMOS-H/SPEED, 14 PIN, SMALL-OUTLINE.	PHILIPS	74HC14D
IC107	28468/325	IC-DIGITAL FLIP-FLOP/MONOSTABLE 74HC4538... DUAL, RETRIGGERABLE, PRECISION, tW=0.7RC, CMOS-H/SPEED,	PHILIPS	74HC4538D
IC108	28461/413	IC-ANALOGUE OPERATIONAL AMP TL074... QUAD, JFET INPUT, LOW NOISE, SLEW RATE 8V/uS MIN, GAIN	MOTOROLA INC.	TL074CD
IC109	28461/845	IC-ANALOGUE SWITCH 74HC4316... QUAD, BILATERAL, WITH COMMON ENABLE, CMOS-H/SPEED, 16 PIN,	PHILIPS	74HC4316D
IC110	28461/845	IC-ANALOGUE SWITCH 74HC4316... QUAD, BILATERAL, WITH COMMON ENABLE, CMOS-H/SPEED, 16 PIN,	PHILIPS	74HC4316D
IC200	28461/411	IC-ANALOGUE OPERATIONAL AMP TL071... SINGLE, JFET INPUT, LOW NOISE, 8 PIN, SMALL-OUTLINE.	MOTOROLA INC.	TL071CD
IC201	28461/411	IC-ANALOGUE OPERATIONAL AMP TL071... SINGLE, JFET INPUT, LOW NOISE, 8 PIN, SMALL-OUTLINE.	MOTOROLA INC.	TL071CD
IC202	28461/806	IC-ANALOGUE OPERATIONAL AMP OP-249... DUAL, PRECISION HI SPEED, SETTLING TIME-1.2uS, GAIN	ANALOG DEVICES LTD	OP-249GS
IC203	28461/437	IC-ANALOGUE OPERATIONAL AMP 5534... 2 INPUT, SINGLE, 10V 16mA LOW NOISE, 10MHz, BIPOLAR, 8 PIN,	PHILIPS	NE5534D
IC204	28461/412	IC-ANALOGUE OPERATIONAL AMP TL072... DUAL, 18V UNITY GAIN BNDWDTH 3MHz, OFFSET VOLTAGE 10mV, SLEW	MOTOROLA INC.	TL072CD
IC205	28461/411	IC-ANALOGUE OPERATIONAL AMP TL071... SINGLE, JFET INPUT, LOW NOISE, 8 PIN, SMALL-OUTLINE.	MOTOROLA INC.	TL071CD
IC206	28461/459	IC-ANALOGUE OPERATIONAL AMP TL032... DUAL, 15V U/GAIN BANDWDTH 1.1MHz, OFFSET VOLTAGE 2.0mV, SLEW	TEXAS INSTRUMENTS	TL032CD(TUBE)
IC207	28461/459	IC-ANALOGUE OPERATIONAL AMP TL032... DUAL, 15V U/GAIN BANDWDTH 1.1MHz, OFFSET VOLTAGE 2.0mV, SLEW	TEXAS INSTRUMENTS	TL032CD(TUBE)
IC208	28461/413	IC-ANALOGUE OPERATIONAL AMP TL074... QUAD, JFET INPUT, LOW NOISE, SLEW RATE 8V/uS MIN, GAIN	MOTOROLA INC.	TL074CD
IC209	28461/412	IC-ANALOGUE OPERATIONAL AMP TL072... DUAL, 18V UNITY GAIN BNDWDTH 3MHz, OFFSET VOLTAGE 10mV, SLEW	MOTOROLA INC.	TL072CD
IC210	28461/029	IC-ANALOGUE SWITCH DG211... QUAD, 15V SPST, ON-RESISTANCE <175R, TTL COMPATIBLE, CMOS, 16 PIN,	ANALOG DEVICES LTD	ADG211AKR
IC211	28461/999	IC-ANALOGUE SWITCH DG441... QUAD, 15V SPST, ON-RESISTANCE<85R, 4 x N/O @ LOGIC 1, TTL	TEMIC UK LTD	DG441DY
IC212	28461/999	IC-ANALOGUE SWITCH DG441... QUAD, 15V SPST, ON-RESISTANCE<85R, 4 x N/O @ LOGIC 1, TTL	TEMIC UK LTD	DG441DY
IC213	28461/029	IC-ANALOGUE SWITCH DG211... QUAD, 15V SPST, ON-RESISTANCE <175R, TTL COMPATIBLE, CMOS, 16 PIN,	ANALOG DEVICES LTD	ADG211AKR
IC214	28461/029	IC-ANALOGUE SWITCH DG211... QUAD, 15V SPST, ON-RESISTANCE <175R, TTL COMPATIBLE, CMOS, 16 PIN,	ANALOG DEVICES LTD	ADG211AKR
IC215	28461/845	IC-ANALOGUE SWITCH 74HC4316... QUAD, BILATERAL, WITH COMMON ENABLE, CMOS-H/SPEED, 16 PIN,	PHILIPS	74HC4316D
IC216	28461/029	IC-ANALOGUE SWITCH DG211... QUAD, 15V SPST, ON-RESISTANCE <175R, TTL COMPATIBLE, CMOS, 16 PIN,	ANALOG DEVICES LTD	ADG211AKR
IC217	28461/029	IC-ANALOGUE SWITCH DG211... QUAD, 15V SPST, ON-RESISTANCE <175R, TTL COMPATIBLE, CMOS, 16 PIN,	ANALOG DEVICES LTD	ADG211AKR
IC218	28461/845	IC-ANALOGUE SWITCH 74HC4316... QUAD, BILATERAL, WITH COMMON ENABLE, CMOS-H/SPEED, 16 PIN,	PHILIPS	74HC4316D
IC219	28461/845	IC-ANALOGUE SWITCH 74HC4316... QUAD, BILATERAL, WITH COMMON ENABLE, CMOS-H/SPEED, 16 PIN,	PHILIPS	74HC4316D

Cir. Ref.	MI part number	Description	Manufacturer	Manufacturer's part number
Audio processor B1/2 (contd.)				
IC220	28461/413	IC-ANALOGUE OPERATIONAL AMP TL074... QUAD, JFET INPUT, LOW NOISE, SLEW RATE 8V/uS MIN, GAIN	MOTOROLA INC.	TL074CD
IC221	28461/053	IC-ANALOGUE FILTER TLC04... LOW PASS 4th ORDER SWITCHED CAPACITOR, BUTTERWORTH, CUT OFF TO 40KHz,	TEXAS INSTRUMENTS	TLC04CP
IC222	28469/543	IC-DIGITAL COUNTER 74HC390... 4 BIT, DUAL, DECADE RIPPLE, CMOS-H/SPEED, 16 PIN, SMALL-OUTLINE.	PHILIPS	74HC390D
IC223	28469/543	IC-DIGITAL COUNTER 74HC390... 4 BIT, DUAL, DECADE RIPPLE, CMOS-H/SPEED, 16 PIN, SMALL-OUTLINE.	PHILIPS	74HC390D
IC224	28461/837	IC-ANALOGUE PHASE-LOCKED-LOOP 74HC4046A... MAX Vco OPERATING FREQUENCY 12MHz, CMOS-H/SPEED, 16 PIN,	PHILIPS	74HC4046AD
IC225	28466/390	IC-DIGITAL NAND-GATE 74HC00... 2 INPUT, QUAD, CMOS-H/SPEED, 14 PIN, SMALL-OUTLINE.	PHILIPS	74HC00D
IC226	28464/175	IC-DIGITAL COUNTER 74HC191... 4 BIT, SINGLE, BINARY UP/DOWN, SYNCHRONOUS, PRESETTABLE,	PHILIPS	74HC191D
IC227	28464/175	IC-DIGITAL COUNTER 74HC191... 4 BIT, SINGLE, BINARY UP/DOWN, SYNCHRONOUS, PRESETTABLE,	PHILIPS	74HC191D
IC228	28461/412	IC-ANALOGUE OPERATIONAL AMP TL072... DUAL, 18V UNITY GAIN BNDWDTH 3MHz, OFFSET VOLTAGE 10mV, SLEW	MOTOROLA INC.	TL072CD
IC229	28461/437	IC-ANALOGUE OPERATIONAL AMP 5534... 2 INPUT, SINGLE, 10V 16mA LOW NOISE, 10MHz, BIPOLAR, 8 PIN,	PHILIPS	NE5534D
IC230	28466/393	IC-DIGITAL NAND-GATE 74HC132... 2 INPUT, QUAD, SCHMITT TRIGGER, CMOS-H/SPEED, 14 PIN,	PHILIPS	74HC132D
IC231	28461/493	IC-ANALOGUE AUDIO-AMPLIFIER LM386... 2 INPUT, SINGLE, 5V 4mA 325mW OUTPUT, 300KHz BANDWIDTH,	NAT. SEMICONDUCTOR	LM386M-1
IC251	28465/055	IC-DIGITAL DECODER/DEMULTIPLEX 74HC138... 3 INPUT, 8 BIT, SINGLE, INVERTING, 3 BIT ADDRESS,	PHILIPS	74HC138D
IC252 to IC257	28462/157	IC-DIGITAL FLIP-FLOP/D-TYPE 74HC377... OCTAL, POS EDGE TRIGGER WITH DATA ENABLE, CMOS-H/SPEED, 20	PHILIPS	74HC377D
IC258	28465/056	IC-DIGITAL DECODER/DEMULTIPLEX 74HC139... 2 INPUT, 4 BIT, DUAL, INVERTING, 1 BIT ADDRESS,	PHILIPS	74HC139D
IC259	28466/390	IC-DIGITAL NAND-GATE 74HC00... 2 INPUT, QUAD, CMOS-H/SPEED, 14 PIN, SMALL-OUTLINE.	PHILIPS	74HC00D
IC301	28467/101	IC-MICRO CONTROLLER, 82C54... PROGRAMMABLE INTERVAL TIMER, 8MHz, CMOS, 28 PIN, PLCC.	HARRIS SEMICONDUCTOR	CS82C54
IC302	28469/095	IC-DIGITAL BUFFER/LINE-DRIVER 74HC126... QUAD, TRI-STATE, HIGH ENABLE, CMOS-H/SPEED, 14 PIN,	PHILIPS	74HC126D
IC303	28466/241	IC-DIGITAL NOR-GATE 74HC02... 2 INPUT, QUAD, CMOS-H/SPEED, 14 PIN, SMALL-OUTLINE.	PHILIPS	74HC02D
IC304	28464/184	IC-DIGITAL COUNTER 74HC161... 4 INPUT, 4 BIT, SINGLE, BINARY, PRESETTABLE, SYNCHRONOUS,	PHILIPS	74HC161D
IC310	28469/052	IC-DIGITAL BUFFER 74HC365... HEX, TRI-STATE, NON-INVERTING, CMOS-H/SPEED, 16 PIN,	PHILIPS	74HC365D
L1	23642/555	INDUCTOR-FIXED 10uH +/- 10% COATED-LACQUER, MINIATURE, 470mA 0R9 MAX, 45 Q @ 7.9 MHz, 45 MHz	MEGGITT ELECTRONICS	C11-406/8/27520/006
L52	23642/909	WOUND-PART INDUCTOR, WIDEBAND HF CHOKE, BEAD-CORE, 4B1 GRADE MATERIAL, 2.5 TURNS, TINNED COPPER WIRE.	PHILIPS	4312-020-36700
L150	23642/528	INDUCTOR-FIXED 47uH +/- 5% EPOXY-MOULD, 60mA 7R MAX, 30 Q @ 2.52 MHz, 15 MHz SRF, SURFACE MOUNTED,	MEGGITT ELECTRONICS	3612-T-470-J
L160	23642/528	INDUCTOR-FIXED 47uH +/- 5% EPOXY-MOULD, 60mA 7R MAX, 30 Q @ 2.52 MHz, 15 MHz SRF, SURFACE MOUNTED,	MEGGITT ELECTRONICS	3612-T-470-J

Cir. Ref.	MI part number	Description	Manufacturer	Manufacturer's part number
Audio processor B1/2 (contd.)				
L161	23642/719	INDUCTOR-FIXED 220uH +/- 5% EPOXY-MOULD, 50mA 21R MAX, 20 Q @ 0.796 MHz, 7 MHz SRF, SURFACE MOUNTED,	MEGGITT ELECTRONICS	3612-T-221-J
L162	23642/526	INDUCTOR-FIXED 470uH +/- 10% EPOXY-MOULD, 62mA 26R MAX, 40 Q @ 0.796 MHz, 3 MHz SRF, SURFACE MOUNTED,	MEGGITT ELECTRONICS	3613-T-471-K
L180	23642/524	INDUCTOR-FIXED 1mH +/- 10% EPOXY-MOULD, 30mA 40R MAX, 30 Q @ 0.252 MHz, 2.5 MHz SRF, SURFACE	MEGGITT ELECTRONICS	3613-T-102-K
L230 to L232	23642/701	INDUCTOR-FIXED 2.2uH +/- 5% EPOXY-MOULD, 320mA 1R MAX, 30 Q @ 7.96 MHz, 75 MHz SRF, SURFACE MOUNTED,	MEGGITT ELECTRONICS	3612-T-2R2-J
PLN	23444/334	CONNECTOR-RF SMB-TYPE MALE, RECEPTACLE, 50 OHMS, PCB-MOUNTING, NICKEL PLATED BODY.	ITT CANNON (UK)	051-051-0000-C90
R1	24811/168	RESISTOR-FIXED METAL-FILM 619R +/- 1% 250mW 200V 50 ppm/DEG.C, SURFACE MOUNTED, SIZE MINI-MELF,	VISHAY COMPONENTS	SMM0204-619R-1%50ppm
R2	25748/566	RESISTOR-VARIABLE CERMET LINEAR, 10K 10% 500mW 200V 100 ppm/DEG.C, MULTI-TURN, VERTICAL-PCB,	MEGGITT ELECTRONICS	4290W404/8/06411/103
R4	24811/607	RESISTOR-FIXED METAL-FILM 20K +/- 0.1% 250mW 200V 15 ppm/DEG.C, SURFACE MOUNTED, SIZE MINI-MELF,	VISHAY COMPONENTS	SMM0204-20K0-0.1%-15
R5	24811/602	RESISTOR-FIXED METAL-FILM 10K +/- 0.1% 250mW 200V 15 ppm/DEG.C, SURFACE MOUNTED, SIZE MINI-MELF,	VISHAY COMPONENTS	SMM0204-10K0-0.1%-15
R6	24811/602	RESISTOR-FIXED METAL-FILM 10K +/- 0.1% 250mW 200V 15 ppm/DEG.C, SURFACE MOUNTED, SIZE MINI-MELF,	VISHAY COMPONENTS	SMM0204-10K0-0.1%-15
R7	24811/187	RESISTOR-FIXED METAL-FILM 3K92 +/- 1% 250mW 200V 50 ppm/DEG.C, SURFACE MOUNTED, SIZE MINI-MELF,	VISHAY COMPONENTS	SMM0204-3K92-1%50ppm
R8	24811/189	RESISTOR-FIXED METAL-FILM 4K75 +/- 1% 250mW 200V 50 ppm/DEG.C, SURFACE MOUNTED, SIZE MINI-MELF,	VISHAY COMPONENTS	SMM0204-4K75-1%50ppm
R9	24811/189	RESISTOR-FIXED METAL-FILM 4K75 +/- 1% 250mW 200V 50 ppm/DEG.C, SURFACE MOUNTED, SIZE MINI-MELF,	VISHAY COMPONENTS	SMM0204-4K75-1%50ppm
R10 to R15	24811/197	RESISTOR-FIXED METAL-FILM 10K +/- 1% 250mW 200V 50 ppm/DEG.C, SURFACE MOUNTED, SIZE MINI-MELF, (8mm	VISHAY COMPONENTS	SMM0204-10K-1%50ppm
R16	24811/227	RESISTOR-FIXED METAL-FILM 182K +/- 1% 250mW 200V 50 ppm/DEG.C, SURFACE MOUNTED, SIZE MINI-MELF,	VISHAY COMPONENTS	SMM0204-182K-1%50ppm
R17	24811/226	RESISTOR-FIXED METAL-FILM 162K +/- 1% 250mW 200V 50 ppm/DEG.C, SURFACE MOUNTED, SIZE MINI-MELF,	VISHAY COMPONENTS	SMM0204-162K-1%50ppm
R18	24811/173	RESISTOR-FIXED METAL-FILM 1K +/- 1% 250mW 200V 50 ppm/DEG.C, SURFACE MOUNTED, SIZE MINI-MELF, (8mm	VISHAY COMPONENTS	SMM0204-1K0-1%-50ppm
R19	24811/141	RESISTOR-FIXED METAL-FILM 47R5 +/- 1% 250mW 200V 50 ppm/DEG.C, SURFACE MOUNTED, SIZE MINI-MELF,	VISHAY COMPONENTS	SMM0204-47R5-1%50ppm
R20	24811/602	RESISTOR-FIXED METAL-FILM 10K +/- 0.1% 250mW 200V 15 ppm/DEG.C, SURFACE MOUNTED, SIZE MINI-MELF,	VISHAY COMPONENTS	SMM0204-10K0-0.1%-15
R21	24753/395	RESISTOR-FIXED METAL-FILM 1K07 +/- 0.5% 250mW 200V 50 ppm/DEG.C, AXIAL, (LOOSE OR TAPED).	VISHAY COMPONENTS	EE.10-1K07-D-T-2
R22	24811/125	RESISTOR-FIXED METAL-FILM 10R +/- 1% 250mW 200V 50 ppm/DEG.C, SURFACE MOUNTED, SIZE MINI-MELF, (8mm	VISHAY COMPONENTS	SMM0204-10R-1%-50ppm
R23	24811/125	RESISTOR-FIXED METAL-FILM 10R +/- 1% 250mW 200V 50 ppm/DEG.C, SURFACE MOUNTED, SIZE MINI-MELF, (8mm	VISHAY COMPONENTS	SMM0204-10R-1%-50ppm
R24	24753/626	RESISTOR-FIXED METAL-FILM 2K +/- 0.5% 250mW 200V 50 ppm/DEG.C, AXIAL, (TAPED).	VISHAY COMPONENTS	EE.10-2K0-D-T-2
R25	24753/395	RESISTOR-FIXED METAL-FILM 1K07 +/- 0.5% 250mW 200V 50 ppm/DEG.C, AXIAL, (LOOSE OR TAPED).	VISHAY COMPONENTS	EE.10-1K07-D-T-2

Cir. Ref.	MI part number	Description	Manufacturer	Manufacturer's part number
Audio processor B1/2 (contd.)				
R26	24811/602	RESISTOR-FIXED METAL-FILM 10K +/- 0.1% 250mW 200V 15 ppm/DEG.C, SURFACE MOUNTED, SIZE MINI-MELF,	VISHAY COMPONENTS	SMM0204-10K0-0.1%-15
R27	24811/149	RESISTOR-FIXED METAL-FILM 100R +/- 1% 250mW 200V 50 ppm/DEG.C, SURFACE MOUNTED, SIZE MINI-MELF,	VISHAY COMPONENTS	SMM0204-100R-1%50ppm
R28 to R33	24811/173	RESISTOR-FIXED METAL-FILM 1K +/- 1% 250mW 200V 50 ppm/DEG.C, SURFACE MOUNTED, SIZE MINI-MELF, (8mm	VISHAY COMPONENTS	SMM0204-1K0-1%-50ppm
R34	24811/607	RESISTOR-FIXED METAL-FILM 20K +/- 0.1% 250mW 200V 15 ppm/DEG.C, SURFACE MOUNTED, SIZE MINI-MELF,	VISHAY COMPONENTS	SMM0204-20K0-0.1%-15
R35	24811/602	RESISTOR-FIXED METAL-FILM 10K +/- 0.1% 250mW 200V 15 ppm/DEG.C, SURFACE MOUNTED, SIZE MINI-MELF,	VISHAY COMPONENTS	SMM0204-10K0-0.1%-15
R36	24811/602	RESISTOR-FIXED METAL-FILM 10K +/- 0.1% 250mW 200V 15 ppm/DEG.C, SURFACE MOUNTED, SIZE MINI-MELF,	VISHAY COMPONENTS	SMM0204-10K0-0.1%-15
R37	24811/187	RESISTOR-FIXED METAL-FILM 3K92 +/- 1% 250mW 200V 50 ppm/DEG.C, SURFACE MOUNTED, SIZE MINI-MELF,	VISHAY COMPONENTS	SMM0204-3K92-1%50ppm
R38	24811/197	RESISTOR-FIXED METAL-FILM 10K +/- 1% 250mW 200V 50 ppm/DEG.C, SURFACE MOUNTED, SIZE MINI-MELF, (8mm	VISHAY COMPONENTS	SMM0204-10K-1%50ppm
R39	24811/197	RESISTOR-FIXED METAL-FILM 10K +/- 1% 250mW 200V 50 ppm/DEG.C, SURFACE MOUNTED, SIZE MINI-MELF, (8mm	VISHAY COMPONENTS	SMM0204-10K-1%50ppm
R40	24811/189	RESISTOR-FIXED METAL-FILM 4K75 +/- 1% 250mW 200V 50 ppm/DEG.C, SURFACE MOUNTED, SIZE MINI-MELF,	VISHAY COMPONENTS	SMM0204-4K75-1%50ppm
R41	24811/197	RESISTOR-FIXED METAL-FILM 10K +/- 1% 250mW 200V 50 ppm/DEG.C, SURFACE MOUNTED, SIZE MINI-MELF, (8mm	VISHAY COMPONENTS	SMM0204-10K-1%50ppm
R42	24753/624	RESISTOR-FIXED METAL-FILM 1K +/- 0.5% 250mW 200V 50 ppm/DEG.C, AXIAL, (TAPED).	VISHAY COMPONENTS	EE.10-1K0-D-T-2
R43	24753/360	RESISTOR-FIXED METAL-FILM 1K05 +/- 0.5% 250mW 200V 50 ppm/DEG.C, AXIAL, (TAPED).	VISHAY COMPONENTS	EE.10-1K05-D-T-2
R44 to R46	24811/602	RESISTOR-FIXED METAL-FILM 10K +/- 0.1% 250mW 200V 15 ppm/DEG.C, SURFACE MOUNTED, SIZE MINI-MELF,	VISHAY COMPONENTS	SMM0204-10K0-0.1%-15
R47	24811/195	RESISTOR-FIXED METAL-FILM 8K25 +/- 1% 250mW 200V 50 ppm/DEG.C, SURFACE MOUNTED, SIZE MINI-MELF,	VISHAY COMPONENTS	SMM0204-8K25-1%50ppm
R48	24753/673	RESISTOR-FIXED METAL-FILM 4K22 +/- 0.5% 250mW 200V 50 ppm/DEG.C, AXIAL, (TAPED).	VISHAY COMPONENTS	EE.10-4K22-D-T-2
R49	24811/607	RESISTOR-FIXED METAL-FILM 20K +/- 0.1% 250mW 200V 15 ppm/DEG.C, SURFACE MOUNTED, SIZE MINI-MELF,	VISHAY COMPONENTS	SMM0204-20K0-0.1%-15
R50	24811/165	RESISTOR-FIXED METAL-FILM 475R +/- 1% 250mW 200V 50 ppm/DEG.C, SURFACE MOUNTED, SIZE MINI-MELF,	VISHAY COMPONENTS	SMM0204-475R-1%50ppm
R51	24811/153	RESISTOR-FIXED METAL-FILM 150R +/- 1% 250mW 200V 50 ppm/DEG.C, SURFACE MOUNTED, SIZE MINI-MELF,	VISHAY COMPONENTS	SMM0204-150R-1%50ppm
R52	24753/541	RESISTOR-FIXED METAL-FILM 75K +/- 0.5% 250mW 200V 50 ppm/DEG.C, AXIAL, (TAPED).	VISHAY COMPONENTS	EE.10-75K-D-T-2
R54	24753/600	RESISTOR-FIXED METAL-FILM 12K4 +/- 0.5% 250mW 200V 50 ppm/DEG.C, AXIAL, (LOOSE OR TAPED).	VISHAY COMPONENTS	EE.10-12K4-D-T-2
R55	24753/627	RESISTOR-FIXED METAL-FILM 4K02 +/- 0.5% 250mW 200V 50 ppm/DEG.C, AXIAL, (TAPED).	VISHAY COMPONENTS	EE.10-4K02-D-T-2
R56	24753/612	RESISTOR-FIXED METAL-FILM 5K11 +/- 0.5% 250mW 200V 50 ppm/DEG.C, AXIAL, (LOOSE OR TAPED).	VISHAY COMPONENTS	EE.10-5K11-D-T-2
R57	24811/181	RESISTOR-FIXED METAL-FILM 2K21 +/- 1% 250mW 200V 50 ppm/DEG.C, SURFACE MOUNTED, SIZE MINI-MELF,	VISHAY COMPONENTS	SMM0204-2K21-1%50ppm
R58	24811/200	RESISTOR-FIXED METAL-FILM 13K +/- 1% 250mW 200V 50 ppm/DEG.C, SURFACE MOUNTED, SIZE MINI-MELF, (8mm	VISHAY COMPONENTS	SMM0204-13K-1%50ppm
R59	24811/198	RESISTOR-FIXED METAL-FILM 11K +/- 1% 250mW 200V 50 ppm/DEG.C, SURFACE MOUNTED, SIZE MINI-MELF, (8mm	VISHAY COMPONENTS	SMM0204-11K-1%50ppm

Cir. Ref.	MI part number	Description	Manufacturer	Manufacturer's part number
Audio processor B1/2 (contd.)				
R60	24811/169	RESISTOR-FIXED METAL-FILM 681R +/- 1% 250mW 200V 50 ppm/DEG.C, SURFACE MOUNTED, SIZE MINI-MELF,	VISHAY COMPONENTS	SMM0204-681R-1%50ppm
R61	25748/566	RESISTOR-VARIABLE CERMET LINEAR, 10K 10% 500mW 200V 100 ppm/DEG.C, MULTI-TURN, VERTICAL-PCB,	MEGGITT ELECTRONICS	4290W404/8/06411/103
R62	24811/197	RESISTOR-FIXED METAL-FILM 10K +/- 1% 250mW 200V 50 ppm/DEG.C, SURFACE MOUNTED, SIZE MINI-MELF, (8mm	VISHAY COMPONENTS	SMM0204-10K-1%50ppm
R63	24811/197	RESISTOR-FIXED METAL-FILM 10K +/- 1% 250mW 200V 50 ppm/DEG.C, SURFACE MOUNTED, SIZE MINI-MELF, (8mm	VISHAY COMPONENTS	SMM0204-10K-1%50ppm
R64 to R66	24811/205	RESISTOR-FIXED METAL-FILM 22K1 +/- 1% 250mW 200V 50 ppm/DEG.C, SURFACE MOUNTED, SIZE MINI-MELF,	VISHAY COMPONENTS	SMM0204-22K1-1%50ppm
R67	24811/165	RESISTOR-FIXED METAL-FILM 475R +/- 1% 250mW 200V 50 ppm/DEG.C, SURFACE MOUNTED, SIZE MINI-MELF,	VISHAY COMPONENTS	SMM0204-475R-1%50ppm
R68	24811/165	RESISTOR-FIXED METAL-FILM 475R +/- 1% 250mW 200V 50 ppm/DEG.C, SURFACE MOUNTED, SIZE MINI-MELF,	VISHAY COMPONENTS	SMM0204-475R-1%50ppm
R69	24811/205	RESISTOR-FIXED METAL-FILM 22K1 +/- 1% 250mW 200V 50 ppm/DEG.C, SURFACE MOUNTED, SIZE MINI-MELF,	VISHAY COMPONENTS	SMM0204-22K1-1%50ppm
R70	24811/209	RESISTOR-FIXED METAL-FILM 33K2 +/- 1% 250mW 200V 50 ppm/DEG.C, SURFACE MOUNTED, SIZE MINI-MELF,	VISHAY COMPONENTS	SMM0204-33K2-1%50ppm
R71	24811/199	RESISTOR-FIXED METAL-FILM 12K1 +/- 1% 250mW 200V 50 ppm/DEG.C, SURFACE MOUNTED, SIZE MINI-MELF,	VISHAY COMPONENTS	SMM0204-12K1-1%50ppm
R72	24811/213	RESISTOR-FIXED METAL-FILM 47K5 +/- 1% 250mW 200V 50 ppm/DEG.C, SURFACE MOUNTED, SIZE MINI-MELF,	VISHAY COMPONENTS	SMM0204-47K5-1%50ppm
R73	24811/213	RESISTOR-FIXED METAL-FILM 47K5 +/- 1% 250mW 200V 50 ppm/DEG.C, SURFACE MOUNTED, SIZE MINI-MELF,	VISHAY COMPONENTS	SMM0204-47K5-1%50ppm
R74	24811/205	RESISTOR-FIXED METAL-FILM 22K1 +/- 1% 250mW 200V 50 ppm/DEG.C, SURFACE MOUNTED, SIZE MINI-MELF,	VISHAY COMPONENTS	SMM0204-22K1-1%50ppm
R77	24811/205	RESISTOR-FIXED METAL-FILM 22K1 +/- 1% 250mW 200V 50 ppm/DEG.C, SURFACE MOUNTED, SIZE MINI-MELF,	VISHAY COMPONENTS	SMM0204-22K1-1%50ppm
R78	24811/173	RESISTOR-FIXED METAL-FILM 1K +/- 1% 250mW 200V 50 ppm/DEG.C, SURFACE MOUNTED, SIZE MINI-MELF, (8mm	VISHAY COMPONENTS	SMM0204-1K0-1%-50ppm
R79	24811/245	RESISTOR-FIXED METAL-FILM 1M +/- 1% 250mW 200V 50 ppm/DEG.C, SURFACE MOUNTED, SIZE MINI-MELF, (8mm	VISHAY COMPONENTS	SMM0204-1M0-1%50ppm
R80	24811/221	RESISTOR-FIXED METAL-FILM 100K +/- 1% 250mW 200V 50 ppm/DEG.C, SURFACE MOUNTED, SIZE MINI-MELF,	VISHAY COMPONENTS	SMM0204-100K-1%50ppm
R81	24811/189	RESISTOR-FIXED METAL-FILM 4K75 +/- 1% 250mW 200V 50 ppm/DEG.C, SURFACE MOUNTED, SIZE MINI-MELF,	VISHAY COMPONENTS	SMM0204-4K75-1%50ppm
R82	24811/208	RESISTOR-FIXED METAL-FILM 30K1 +/- 1% 250mW 200V 50 ppm/DEG.C, SURFACE MOUNTED, SIZE MINI-MELF,	VISHAY COMPONENTS	SMM0204-30K1-1%50ppm
R83	25711/643	RESISTOR-VARIABLE CERMET LINEAR, 50K 10% 500mW 200V 150 ppm/DEG.C, SINGLE-TURN, HORIZONTAL-PCB,	VISHAY COMPONENTS	TYA-50K-10%
R90	25685/418	THERMISTOR POSITIVE-TC DISC, 7.4mm 2R67 @ 20 DEG.C, 400mW 5mm PWP, FAULT VOLTAGE 60V, TRIP	BOURNS ELECTRONICS	MF-R020
R91	25685/418	THERMISTOR POSITIVE-TC DISC, 7.4mm 2R67 @ 20 DEG.C, 400mW 5mm PWP, FAULT VOLTAGE 60V, TRIP	BOURNS ELECTRONICS	MF-R020
R92	24811/189	RESISTOR-FIXED METAL-FILM 4K75 +/- 1% 250mW 200V 50 ppm/DEG.C, SURFACE MOUNTED, SIZE MINI-MELF,	VISHAY COMPONENTS	SMM0204-4K75-1%50ppm
R93	24811/197	RESISTOR-FIXED METAL-FILM 10K +/- 1% 250mW 200V 50 ppm/DEG.C, SURFACE MOUNTED, SIZE MINI-MELF, (8mm	VISHAY COMPONENTS	SMM0204-10K-1%50ppm
R94	24811/199	RESISTOR-FIXED METAL-FILM 12K1 +/- 1% 250mW 200V 50 ppm/DEG.C, SURFACE MOUNTED, SIZE MINI-MELF,	VISHAY COMPONENTS	SMM0204-12K1-1%50ppm
R95	24811/173	RESISTOR-FIXED METAL-FILM 1K +/- 1% 250mW 200V 50 ppm/DEG.C, SURFACE MOUNTED, SIZE MINI-MELF, (8mm	VISHAY COMPONENTS	SMM0204-1K0-1%-50ppm

Cir. Ref.	MI part number	Description	Manufacturer	Manufacturer's part number
Audio processor B1/2 (contd.)				
R96	24811/197	RESISTOR-FIXED METAL-FILM 10K +/- 1% 250mW 200V 50 ppm/DEG.C, SURFACE MOUNTED, SIZE MINI-MELF, (8mm	VISHAY COMPONENTS	SMM0204-10K-1%50ppm
R97	24811/189	RESISTOR-FIXED METAL-FILM 4K75 +/- 1% 250mW 200V 50 ppm/DEG.C, SURFACE MOUNTED, SIZE MINI-MELF,	VISHAY COMPONENTS	SMM0204-4K75-1%50ppm
R98	24811/213	RESISTOR-FIXED METAL-FILM 47K5 +/- 1% 250mW 200V 50 ppm/DEG.C, SURFACE MOUNTED, SIZE MINI-MELF,	VISHAY COMPONENTS	SMM0204-47K5-1%50ppm
R100	24811/157	RESISTOR-FIXED METAL-FILM 221R +/- 1% 250mW 200V 50 ppm/DEG.C, SURFACE MOUNTED, SIZE MINI-MELF,	VISHAY COMPONENTS	SMM0204-221R-1%50ppm
R101	24811/157	RESISTOR-FIXED METAL-FILM 221R +/- 1% 250mW 200V 50 ppm/DEG.C, SURFACE MOUNTED, SIZE MINI-MELF,	VISHAY COMPONENTS	SMM0204-221R-1%50ppm
R102	24811/149	RESISTOR-FIXED METAL-FILM 100R +/- 1% 250mW 200V 50 ppm/DEG.C, SURFACE MOUNTED, SIZE MINI-MELF,	VISHAY COMPONENTS	SMM0204-100R-1%50ppm
R103	24811/181	RESISTOR-FIXED METAL-FILM 2K21 +/- 1% 250mW 200V 50 ppm/DEG.C, SURFACE MOUNTED, SIZE MINI-MELF,	VISHAY COMPONENTS	SMM0204-2K21-1%50ppm
R104	24811/173	RESISTOR-FIXED METAL-FILM 1K +/- 1% 250mW 200V 50 ppm/DEG.C, SURFACE MOUNTED, SIZE MINI-MELF, (8mm	VISHAY COMPONENTS	SMM0204-1K0-1%-50ppm
R105	24811/181	RESISTOR-FIXED METAL-FILM 2K21 +/- 1% 250mW 200V 50 ppm/DEG.C, SURFACE MOUNTED, SIZE MINI-MELF,	VISHAY COMPONENTS	SMM0204-2K21-1%50ppm
R106	24811/149	RESISTOR-FIXED METAL-FILM 100R +/- 1% 250mW 200V 50 ppm/DEG.C, SURFACE MOUNTED, SIZE MINI-MELF,	VISHAY COMPONENTS	SMM0204-100R-1%50ppm
R107	24811/173	RESISTOR-FIXED METAL-FILM 1K +/- 1% 250mW 200V 50 ppm/DEG.C, SURFACE MOUNTED, SIZE MINI-MELF, (8mm	VISHAY COMPONENTS	SMM0204-1K0-1%-50ppm
R108	24811/181	RESISTOR-FIXED METAL-FILM 2K21 +/- 1% 250mW 200V 50 ppm/DEG.C, SURFACE MOUNTED, SIZE MINI-MELF,	VISHAY COMPONENTS	SMM0204-2K21-1%50ppm
R109	24811/181	RESISTOR-FIXED METAL-FILM 2K21 +/- 1% 250mW 200V 50 ppm/DEG.C, SURFACE MOUNTED, SIZE MINI-MELF,	VISHAY COMPONENTS	SMM0204-2K21-1%50ppm
R110	24811/189	RESISTOR-FIXED METAL-FILM 4K75 +/- 1% 250mW 200V 50 ppm/DEG.C, SURFACE MOUNTED, SIZE MINI-MELF,	VISHAY COMPONENTS	SMM0204-4K75-1%50ppm
R111	24811/173	RESISTOR-FIXED METAL-FILM 1K +/- 1% 250mW 200V 50 ppm/DEG.C, SURFACE MOUNTED, SIZE MINI-MELF, (8mm	VISHAY COMPONENTS	SMM0204-1K0-1%-50ppm
R112 to R114	24811/189	RESISTOR-FIXED METAL-FILM 4K75 +/- 1% 250mW 200V 50 ppm/DEG.C, SURFACE MOUNTED, SIZE MINI-MELF,	VISHAY COMPONENTS	SMM0204-4K75-1%50ppm
R115	24811/173	RESISTOR-FIXED METAL-FILM 1K +/- 1% 250mW 200V 50 ppm/DEG.C, SURFACE MOUNTED, SIZE MINI-MELF, (8mm	VISHAY COMPONENTS	SMM0204-1K0-1%-50ppm
R116 to R119	24811/189	RESISTOR-FIXED METAL-FILM 4K75 +/- 1% 250mW 200V 50 ppm/DEG.C, SURFACE MOUNTED, SIZE MINI-MELF,	VISHAY COMPONENTS	SMM0204-4K75-1%50ppm
R120	24811/125	RESISTOR-FIXED METAL-FILM 10R +/- 1% 250mW 200V 50 ppm/DEG.C, SURFACE MOUNTED, SIZE MINI-MELF, (8mm	VISHAY COMPONENTS	SMM0204-10R-1%-50ppm
R121	24811/173	RESISTOR-FIXED METAL-FILM 1K +/- 1% 250mW 200V 50 ppm/DEG.C, SURFACE MOUNTED, SIZE MINI-MELF, (8mm	VISHAY COMPONENTS	SMM0204-1K0-1%-50ppm
R122	24811/141	RESISTOR-FIXED METAL-FILM 47R5 +/- 1% 250mW 200V 50 ppm/DEG.C, SURFACE MOUNTED, SIZE MINI-MELF,	VISHAY COMPONENTS	SMM0204-47R5-1%50ppm
R123	24811/173	RESISTOR-FIXED METAL-FILM 1K +/- 1% 250mW 200V 50 ppm/DEG.C, SURFACE MOUNTED, SIZE MINI-MELF, (8mm	VISHAY COMPONENTS	SMM0204-1K0-1%-50ppm
R124	24811/125	RESISTOR-FIXED METAL-FILM 10R +/- 1% 250mW 200V 50 ppm/DEG.C, SURFACE MOUNTED, SIZE MINI-MELF, (8mm	VISHAY COMPONENTS	SMM0204-10R-1%-50ppm
R125	24811/161	RESISTOR-FIXED METAL-FILM 332R +/- 1% 250mW 200V 50 ppm/DEG.C, SURFACE MOUNTED, SIZE MINI-MELF,	VISHAY COMPONENTS	SMM0204-332R-1%50ppm
R126	24811/161	RESISTOR-FIXED METAL-FILM 332R +/- 1% 250mW 200V 50 ppm/DEG.C, SURFACE MOUNTED, SIZE MINI-MELF,	VISHAY COMPONENTS	SMM0204-332R-1%50ppm
R127	24811/186	RESISTOR-FIXED METAL-FILM 3K65 +/- 1% 250mW 200V 50 ppm/DEG.C, SURFACE MOUNTED, SIZE MINI-MELF,	VISHAY COMPONENTS	SMM0204-3K65-1%50ppm

Cir. Ref.	MI part number	Description	Manufacturer	Manufacturer's part number
Audio processor B1/2 (contd.)				
R128	24811/186	RESISTOR-FIXED METAL-FILM 3K65 +/- 1% 250mW 200V 50 ppm/DEG.C, SURFACE MOUNTED, SIZE MINI-MELF,	VISHAY COMPONENTS	SMM0204-3K65-1%50ppm
R129	24811/169	RESISTOR-FIXED METAL-FILM 681R +/- 1% 250mW 200V 50 ppm/DEG.C, SURFACE MOUNTED, SIZE MINI-MELF,	VISHAY COMPONENTS	SMM0204-681R-1%50ppm
R130	24811/169	RESISTOR-FIXED METAL-FILM 681R +/- 1% 250mW 200V 50 ppm/DEG.C, SURFACE MOUNTED, SIZE MINI-MELF,	VISHAY COMPONENTS	SMM0204-681R-1%50ppm
R131	24811/165	RESISTOR-FIXED METAL-FILM 475R +/- 1% 250mW 200V 50 ppm/DEG.C, SURFACE MOUNTED, SIZE MINI-MELF,	VISHAY COMPONENTS	SMM0204-475R-1%50ppm
R132	24811/186	RESISTOR-FIXED METAL-FILM 3K65 +/- 1% 250mW 200V 50 ppm/DEG.C, SURFACE MOUNTED, SIZE MINI-MELF,	VISHAY COMPONENTS	SMM0204-3K65-1%50ppm
R133	24811/173	RESISTOR-FIXED METAL-FILM 1K +/- 1% 250mW 200V 50 ppm/DEG.C, SURFACE MOUNTED, SIZE MINI-MELF, (8mm	VISHAY COMPONENTS	SMM0204-1K0-1%-50ppm
R134	24811/173	RESISTOR-FIXED METAL-FILM 1K +/- 1% 250mW 200V 50 ppm/DEG.C, SURFACE MOUNTED, SIZE MINI-MELF, (8mm	VISHAY COMPONENTS	SMM0204-1K0-1%-50ppm
R135	24811/153	RESISTOR-FIXED METAL-FILM 150R +/- 1% 250mW 200V 50 ppm/DEG.C, SURFACE MOUNTED, SIZE MINI-MELF,	VISHAY COMPONENTS	SMM0204-150R-1%50ppm
R136	24811/153	RESISTOR-FIXED METAL-FILM 150R +/- 1% 250mW 200V 50 ppm/DEG.C, SURFACE MOUNTED, SIZE MINI-MELF,	VISHAY COMPONENTS	SMM0204-150R-1%50ppm
R137	24811/149	RESISTOR-FIXED METAL-FILM 100R +/- 1% 250mW 200V 50 ppm/DEG.C, SURFACE MOUNTED, SIZE MINI-MELF,	VISHAY COMPONENTS	SMM0204-100R-1%50ppm
R138	24811/197	RESISTOR-FIXED METAL-FILM 10K +/- 1% 250mW 200V 50 ppm/DEG.C, SURFACE MOUNTED, SIZE MINI-MELF, (8mm	VISHAY COMPONENTS	SMM0204-10K-1%50ppm
R139	24811/227	RESISTOR-FIXED METAL-FILM 182K +/- 1% 250mW 200V 50 ppm/DEG.C, SURFACE MOUNTED, SIZE MINI-MELF,	VISHAY COMPONENTS	SMM0204-182K-1%50ppm
R140	24811/214	RESISTOR-FIXED METAL-FILM 51K1 +/- 1% 250mW 200V 50 ppm/DEG.C, SURFACE MOUNTED, SIZE MINI-MELF,	VISHAY COMPONENTS	SMM0204-51K1-1%50ppm
R141	24811/214	RESISTOR-FIXED METAL-FILM 51K1 +/- 1% 250mW 200V 50 ppm/DEG.C, SURFACE MOUNTED, SIZE MINI-MELF,	VISHAY COMPONENTS	SMM0204-51K1-1%50ppm
R142	24811/227	RESISTOR-FIXED METAL-FILM 182K +/- 1% 250mW 200V 50 ppm/DEG.C, SURFACE MOUNTED, SIZE MINI-MELF,	VISHAY COMPONENTS	SMM0204-182K-1%50ppm
R143	25748/564	RESISTOR-VARIABLE CERMET LINEAR, 500R 10% 500mW 200V 100 ppm/DEG.C, MULTI-TURN, VERTICAL-PCB,	MEGGITT ELECTRONICS	4290W404/8/06411/501
R144	24811/181	RESISTOR-FIXED METAL-FILM 2K21 +/- 1% 250mW 200V 50 ppm/DEG.C, SURFACE MOUNTED, SIZE MINI-MELF,	VISHAY COMPONENTS	SMM0204-2K21-1%50ppm
R145	24811/221	RESISTOR-FIXED METAL-FILM 100K +/- 1% 250mW 200V 50 ppm/DEG.C, SURFACE MOUNTED, SIZE MINI-MELF,	VISHAY COMPONENTS	SMM0204-100K-1%50ppm
R146	24811/221	RESISTOR-FIXED METAL-FILM 100K +/- 1% 250mW 200V 50 ppm/DEG.C, SURFACE MOUNTED, SIZE MINI-MELF,	VISHAY COMPONENTS	SMM0204-100K-1%50ppm
R147	24811/238	RESISTOR-FIXED METAL-FILM 511K +/- 1% 250mW 200V 50 ppm/DEG.C, SURFACE MOUNTED, SIZE MINI-MELF,	VISHAY COMPONENTS	SMM0204-511K-1%50ppm
R148	24811/169	RESISTOR-FIXED METAL-FILM 681R +/- 1% 250mW 200V 50 ppm/DEG.C, SURFACE MOUNTED, SIZE MINI-MELF,	VISHAY COMPONENTS	SMM0204-681R-1%50ppm
R149	24811/231	RESISTOR-FIXED METAL-FILM 274K +/- 1% 250mW 200V 50 ppm/DEG.C, SURFACE MOUNTED, SIZE MINI-MELF,	VISHAY COMPONENTS	SMM0204-274K-1%50ppm
R150	24811/221	RESISTOR-FIXED METAL-FILM 100K +/- 1% 250mW 200V 50 ppm/DEG.C, SURFACE MOUNTED, SIZE MINI-MELF,	VISHAY COMPONENTS	SMM0204-100K-1%50ppm
R151	24811/173	RESISTOR-FIXED METAL-FILM 1K +/- 1% 250mW 200V 50 ppm/DEG.C, SURFACE MOUNTED, SIZE MINI-MELF, (8mm	VISHAY COMPONENTS	SMM0204-1K0-1%-50ppm
R152	24811/125	RESISTOR-FIXED METAL-FILM 10R +/- 1% 250mW 200V 50 ppm/DEG.C, SURFACE MOUNTED, SIZE MINI-MELF, (8mm	VISHAY COMPONENTS	SMM0204-10R-1%-50ppm
R153	24811/161	RESISTOR-FIXED METAL-FILM 332R +/- 1% 250mW 200V 50 ppm/DEG.C, SURFACE MOUNTED, SIZE MINI-MELF,	VISHAY COMPONENTS	SMM0204-332R-1%50ppm

Cir. Ref.	MI part number	Description	Manufacturer	Manufacturer's part number
Audio processor B1/2 (contd.)				
R154	24811/190	RESISTOR-FIXED METAL-FILM 5K11 +/- 1% 250mW 200V 50 ppm/DEG.C, SURFACE MOUNTED, SIZE MINI-MELF,	VISHAY COMPONENTS	SMM0204-5K11-1%50ppm
R155	24811/186	RESISTOR-FIXED METAL-FILM 3K65 +/- 1% 250mW 200V 50 ppm/DEG.C, SURFACE MOUNTED, SIZE MINI-MELF,	VISHAY COMPONENTS	SMM0204-3K65-1%50ppm
R156	24811/197	RESISTOR-FIXED METAL-FILM 10K +/- 1% 250mW 200V 50 ppm/DEG.C, SURFACE MOUNTED, SIZE MINI-MELF, (8mm	VISHAY COMPONENTS	SMM0204-10K-1%50ppm
R157	24811/235	RESISTOR-FIXED METAL-FILM 392K +/- 1% 250mW 200V 50 ppm/DEG.C, SURFACE MOUNTED, SIZE MINI-MELF,	VISHAY COMPONENTS	SMM0204-392K-1%50ppm
R158 to R160	24811/125	RESISTOR-FIXED METAL-FILM 10R +/- 1% 250mW 200V 50 ppm/DEG.C, SURFACE MOUNTED, SIZE MINI-MELF, (8mm	VISHAY COMPONENTS	SMM0204-10R-1%-50ppm
R161	24811/221	RESISTOR-FIXED METAL-FILM 100K +/- 1% 250mW 200V 50 ppm/DEG.C, SURFACE MOUNTED, SIZE MINI-MELF,	VISHAY COMPONENTS	SMM0204-100K-1%50ppm
R162	24811/221	RESISTOR-FIXED METAL-FILM 100K +/- 1% 250mW 200V 50 ppm/DEG.C, SURFACE MOUNTED, SIZE MINI-MELF,	VISHAY COMPONENTS	SMM0204-100K-1%50ppm
R163 to R165	24811/173	RESISTOR-FIXED METAL-FILM 1K +/- 1% 250mW 200V 50 ppm/DEG.C, SURFACE MOUNTED, SIZE MINI-MELF, (8mm	VISHAY COMPONENTS	SMM0204-1K0-1%-50ppm
R166	24811/133	RESISTOR-FIXED METAL-FILM 22R1 +/- 1% 250mW 200V 50 ppm/DEG.C, SURFACE MOUNTED, SIZE MINI-MELF,	VISHAY COMPONENTS	SMM0204-22R1-1%50ppm
R167	24811/221	RESISTOR-FIXED METAL-FILM 100K +/- 1% 250mW 200V 50 ppm/DEG.C, SURFACE MOUNTED, SIZE MINI-MELF,	VISHAY COMPONENTS	SMM0204-100K-1%50ppm
R168	24811/218	RESISTOR-FIXED METAL-FILM 75K +/- 1% 250mW 200V 50 ppm/DEG.C, SURFACE MOUNTED, SIZE MINI-MELF, (8mm	VISHAY COMPONENTS	SMM0204-75K-1%50ppm
R169	24811/188	RESISTOR-FIXED METAL-FILM 4K32 +/- 1% 250mW 200V 50 ppm/DEG.C, SURFACE MOUNTED, SIZE MINI-MELF,	VISHAY COMPONENTS	SMM0204-4K32-1%50ppm
R170	24811/188	RESISTOR-FIXED METAL-FILM 4K32 +/- 1% 250mW 200V 50 ppm/DEG.C, SURFACE MOUNTED, SIZE MINI-MELF,	VISHAY COMPONENTS	SMM0204-4K32-1%50ppm
R171	24811/173	RESISTOR-FIXED METAL-FILM 1K +/- 1% 250mW 200V 50 ppm/DEG.C, SURFACE MOUNTED, SIZE MINI-MELF, (8mm	VISHAY COMPONENTS	SMM0204-1K0-1%-50ppm
R172	24811/170	RESISTOR-FIXED METAL-FILM 750R +/- 1% 250mW 200V 50 ppm/DEG.C, SURFACE MOUNTED, SIZE MINI-MELF,	VISHAY COMPONENTS	SMM0204-750R-1%50ppm
R173	24811/173	RESISTOR-FIXED METAL-FILM 1K +/- 1% 250mW 200V 50 ppm/DEG.C, SURFACE MOUNTED, SIZE MINI-MELF, (8mm	VISHAY COMPONENTS	SMM0204-1K0-1%-50ppm
R174	24811/170	RESISTOR-FIXED METAL-FILM 750R +/- 1% 250mW 200V 50 ppm/DEG.C, SURFACE MOUNTED, SIZE MINI-MELF,	VISHAY COMPONENTS	SMM0204-750R-1%50ppm
R175	24811/253	RESISTOR-FIXED METAL-FILM 2M21 +/- 1% 250mW 200V 50 ppm/DEG.C, SURFACE MOUNTED, SIZE MINI-MELF,	VISHAY COMPONENTS	SMM0204-2M21-1%50ppm
R176	24811/125	RESISTOR-FIXED METAL-FILM 10R +/- 1% 250mW 200V 50 ppm/DEG.C, SURFACE MOUNTED, SIZE MINI-MELF, (8mm	VISHAY COMPONENTS	SMM0204-10R-1%-50ppm
R177	24811/133	RESISTOR-FIXED METAL-FILM 22R1 +/- 1% 250mW 200V 50 ppm/DEG.C, SURFACE MOUNTED, SIZE MINI-MELF,	VISHAY COMPONENTS	SMM0204-22R1-1%50ppm
R178	24811/133	RESISTOR-FIXED METAL-FILM 22R1 +/- 1% 250mW 200V 50 ppm/DEG.C, SURFACE MOUNTED, SIZE MINI-MELF,	VISHAY COMPONENTS	SMM0204-22R1-1%50ppm
R179	24811/185	RESISTOR-FIXED METAL-FILM 3K32 +/- 1% 250mW 200V 50 ppm/DEG.C, SURFACE MOUNTED, SIZE MINI-MELF,	VISHAY COMPONENTS	SMM0204-3K32-1%50ppm
R180	24811/189	RESISTOR-FIXED METAL-FILM 4K75 +/- 1% 250mW 200V 50 ppm/DEG.C, SURFACE MOUNTED, SIZE MINI-MELF,	VISHAY COMPONENTS	SMM0204-4K75-1%50ppm
R181	25711/638	RESISTOR-VARIABLE CERMET LINEAR, 1K 10% 500mW 200V 150 ppm/DEG.C, SINGLE-TURN, HORIZONTAL-PCB,	VISHAY COMPONENTS	TYA-1K-10%
R182	24811/179	RESISTOR-FIXED METAL-FILM 1K82 +/- 1% 250mW 200V 50 ppm/DEG.C, SURFACE MOUNTED, SIZE MINI-MELF,	VISHAY COMPONENTS	SMM0204-1K82-1%50ppm
R183	24753/541	RESISTOR-FIXED METAL-FILM 75K +/- 0.5% 250mW 200V 50 ppm/DEG.C, AXIAL, (TAPED).	VISHAY COMPONENTS	EE.10-75K-D-T-2

Cir. Ref.	MI part number	Description	Manufacturer	Manufacturer's part number
Audio processor B1/2 (contd.)				
R184	24811/194	RESISTOR-FIXED METAL-FILM 7K5 +/- 1% 250mW 200V 50 ppm/DEG.C, SURFACE MOUNTED, SIZE MINI-MELF, (8mm	VISHAY COMPONENTS	SMM0204-7K5-1%50ppm
R185	24811/184	RESISTOR-FIXED METAL-FILM 3K01 +/- 1% 250mW 200V 50 ppm/DEG.C, SURFACE MOUNTED, SIZE MINI-MELF,	VISHAY COMPONENTS	SMM0204-3K01-1%50ppm
R186	24811/184	RESISTOR-FIXED METAL-FILM 3K01 +/- 1% 250mW 200V 50 ppm/DEG.C, SURFACE MOUNTED, SIZE MINI-MELF,	VISHAY COMPONENTS	SMM0204-3K01-1%50ppm
R187	24753/582	RESISTOR-FIXED METAL-FILM 54K6 +/- 0.5% 250mW 200V 50 ppm/DEG.C, AXIAL, (TAPED).	VISHAY COMPONENTS	EE.10-54K6-D-T-2
R188	24753/630	RESISTOR-FIXED METAL-FILM 14K3 +/- 0.5% 250mW 200V 50 ppm/DEG.C, AXIAL, (LOOSE OR TAPED).	VISHAY COMPONENTS	EE.10-14K3-D-T-2
R189	24811/225	RESISTOR-FIXED METAL-FILM 150K +/- 1% 250mW 200V 50 ppm/DEG.C, SURFACE MOUNTED, SIZE MINI-MELF,	VISHAY COMPONENTS	SMM0204-150K-1%50ppm
R190	24811/197	RESISTOR-FIXED METAL-FILM 10K +/- 1% 250mW 200V 50 ppm/DEG.C, SURFACE MOUNTED, SIZE MINI-MELF, (8mm	VISHAY COMPONENTS	SMM0204-10K-1%50ppm
R191	24811/200	RESISTOR-FIXED METAL-FILM 13K +/- 1% 250mW 200V 50 ppm/DEG.C, SURFACE MOUNTED, SIZE MINI-MELF, (8mm	VISHAY COMPONENTS	SMM0204-13K-1%50ppm
R192	24811/157	RESISTOR-FIXED METAL-FILM 221R +/- 1% 250mW 200V 50 ppm/DEG.C, SURFACE MOUNTED, SIZE MINI-MELF,	VISHAY COMPONENTS	SMM0204-221R-1%50ppm
R193	24811/185	RESISTOR-FIXED METAL-FILM 3K32 +/- 1% 250mW 200V 50 ppm/DEG.C, SURFACE MOUNTED, SIZE MINI-MELF,	VISHAY COMPONENTS	SMM0204-3K32-1%50ppm
R194	24811/253	RESISTOR-FIXED METAL-FILM 2M21 +/- 1% 250mW 200V 50 ppm/DEG.C, SURFACE MOUNTED, SIZE MINI-MELF,	VISHAY COMPONENTS	SMM0204-2M21-1%50ppm
R195	24811/245	RESISTOR-FIXED METAL-FILM 1M +/- 1% 250mW 200V 50 ppm/DEG.C, SURFACE MOUNTED, SIZE MINI-MELF, (8mm	VISHAY COMPONENTS	SMM0204-1M0-1%50ppm
R196	24811/197	RESISTOR-FIXED METAL-FILM 10K +/- 1% 250mW 200V 50 ppm/DEG.C, SURFACE MOUNTED, SIZE MINI-MELF, (8mm	VISHAY COMPONENTS	SMM0204-10K-1%50ppm
R197	24811/181	RESISTOR-FIXED METAL-FILM 2K21 +/- 1% 250mW 200V 50 ppm/DEG.C, SURFACE MOUNTED, SIZE MINI-MELF,	VISHAY COMPONENTS	SMM0204-2K21-1%50ppm
R198	24811/157	RESISTOR-FIXED METAL-FILM 221R +/- 1% 250mW 200V 50 ppm/DEG.C, SURFACE MOUNTED, SIZE MINI-MELF,	VISHAY COMPONENTS	SMM0204-221R-1%50ppm
R199	24811/217	RESISTOR-FIXED METAL-FILM 68K1 +/- 1% 250mW 200V 50 ppm/DEG.C, SURFACE MOUNTED, SIZE MINI-MELF,	VISHAY COMPONENTS	SMM0204-68K1-1%50ppm
R200	24811/245	RESISTOR-FIXED METAL-FILM 1M +/- 1% 250mW 200V 50 ppm/DEG.C, SURFACE MOUNTED, SIZE MINI-MELF, (8mm	VISHAY COMPONENTS	SMM0204-1M0-1%50ppm
R201	24811/185	RESISTOR-FIXED METAL-FILM 3K32 +/- 1% 250mW 200V 50 ppm/DEG.C, SURFACE MOUNTED, SIZE MINI-MELF,	VISHAY COMPONENTS	SMM0204-3K32-1%50ppm
R202	24811/233	RESISTOR-FIXED METAL-FILM 332K +/- 1% 250mW 200V 50 ppm/DEG.C, SURFACE MOUNTED, SIZE MINI-MELF,	VISHAY COMPONENTS	SMM0204-332K-1%50ppm
R203	24753/231	RESISTOR-FIXED METAL-FILM 55K6 +/- 0.5% 250mW 200V 50 ppm/DEG.C, AXIAL, (TAPED).	VISHAY COMPONENTS	EE.10-55K6-D-T-2
R204	24753/363	RESISTOR-FIXED METAL-FILM 499K +/- 0.5% 250mW 200V 50 ppm/DEG.C, AXIAL, (TAPED).	VISHAY COMPONENTS	EE.10-499K-D-T-2
R205	25711/644	RESISTOR-VARIABLE CERMET LINEAR, 100K 10% 500mW 200V 150 ppm/DEG.C, SINGLE-TURN, HORIZONTAL-PCB,	VISHAY COMPONENTS	TYA-100K-10%
R206	24811/125	RESISTOR-FIXED METAL-FILM 10R +/- 1% 250mW 200V 50 ppm/DEG.C, SURFACE MOUNTED, SIZE MINI-MELF, (8mm	VISHAY COMPONENTS	SMM0204-10R-1%-50ppm
R207	24811/125	RESISTOR-FIXED METAL-FILM 10R +/- 1% 250mW 200V 50 ppm/DEG.C, SURFACE MOUNTED, SIZE MINI-MELF, (8mm	VISHAY COMPONENTS	SMM0204-10R-1%-50ppm
R208	24811/199	RESISTOR-FIXED METAL-FILM 12K1 +/- 1% 250mW 200V 50 ppm/DEG.C, SURFACE MOUNTED, SIZE MINI-MELF,	VISHAY COMPONENTS	SMM0204-12K1-1%50ppm
R209	24811/212	RESISTOR-FIXED METAL-FILM 43K2 +/- 1% 250mW 200V 50 ppm/DEG.C, SURFACE MOUNTED, SIZE MINI-MELF,	VISHAY COMPONENTS	SMM0204-43K2-1%50ppm

Cir. Ref.	MI part number	Description	Manufacturer	Manufacturer's part number
Audio processor B1/2 (contd.)				
R210	25711/642	RESISTOR-VARIABLE CERMET LINEAR, 20K 10% 500mW 200V 150 ppm/DEG.C, SINGLE-TURN, HORIZONTAL-PCB,	VISHAY COMPONENTS	TYA-20K-10%
R211	25711/644	RESISTOR-VARIABLE CERMET LINEAR, 100K 10% 500mW 200V 150 ppm/DEG.C, SINGLE-TURN, HORIZONTAL-PCB,	VISHAY COMPONENTS	TYA-100K-10%
R212	24753/640	RESISTOR-FIXED METAL-FILM 4K32 +/- 0.5% 250mW 200V 50 ppm/DEG.C, AXIAL, (LOOSE OR TAPED).	VISHAY COMPONENTS	EE.10-4K32-D-T-2
R213	24811/644	RESISTOR-FIXED METAL-FILM 39K2 +/- 0.1% 250mW 200V 15 ppm/DEG.C, SURFACE MOUNTED, SIZE MINI-MELF,	VISHAY COMPONENTS	SMM0204-39K2-0.1%-15
R214	24811/203	RESISTOR-FIXED METAL-FILM 18K2 +/- 1% 250mW 200V 50 ppm/DEG.C, SURFACE MOUNTED, SIZE MINI-MELF,	VISHAY COMPONENTS	SMM0204-18K2-1%50ppm
R215	24811/623	RESISTOR-FIXED METAL-FILM 12K1 +/- 0.1% 250mW 200V 15 ppm/DEG.C, SURFACE MOUNTED, SIZE MINI-MELF,	VISHAY COMPONENTS	SMM0204-12K1-0.1%-15
R216	24811/173	RESISTOR-FIXED METAL-FILM 1K +/- 1% 250mW 200V 50 ppm/DEG.C, SURFACE MOUNTED, SIZE MINI-MELF, (8mm	VISHAY COMPONENTS	SMM0204-1K0-1%-50ppm
R217	24811/206	RESISTOR-FIXED METAL-FILM 24K3 +/- 1% 250mW 200V 50 ppm/DEG.C, SURFACE MOUNTED, SIZE MINI-MELF,	VISHAY COMPONENTS	SMM0204-24K3-1%50ppm
R218	24811/206	RESISTOR-FIXED METAL-FILM 24K3 +/- 1% 250mW 200V 50 ppm/DEG.C, SURFACE MOUNTED, SIZE MINI-MELF,	VISHAY COMPONENTS	SMM0204-24K3-1%50ppm
R219	24753/364	RESISTOR-FIXED METAL-FILM 4K99 +/- 0.5% 250mW 200V 50 ppm/DEG.C, AXIAL, (LOOSE OR TAPED).	VISHAY COMPONENTS	EE.10-4K99-D-T-2
R220	24753/475	RESISTOR-FIXED METAL-FILM 3K +/- 0.5% 250mW 200V 50 ppm/DEG.C, AXIAL, (LOOSE OR TAPED).	VISHAY COMPONENTS	EE.10-3K0-D-T-2
R221	24753/624	RESISTOR-FIXED METAL-FILM 1K +/- 0.5% 250mW 200V 50 ppm/DEG.C, AXIAL, (TAPED).	VISHAY COMPONENTS	EE.10-1K0-D-T-2
R222	24753/624	RESISTOR-FIXED METAL-FILM 1K +/- 0.5% 250mW 200V 50 ppm/DEG.C, AXIAL, (TAPED).	VISHAY COMPONENTS	EE.10-1K0-D-T-2
R223	24811/204	RESISTOR-FIXED METAL-FILM 20K +/- 1% 250mW 200V 50 ppm/DEG.C, SURFACE MOUNTED, SIZE MINI-MELF, (8mm	VISHAY COMPONENTS	SMM0204-20K-1%50ppm
R224	24811/221	RESISTOR-FIXED METAL-FILM 100K +/- 1% 250mW 200V 50 ppm/DEG.C, SURFACE MOUNTED, SIZE MINI-MELF,	VISHAY COMPONENTS	SMM0204-100K-1%50ppm
R225	24811/197	RESISTOR-FIXED METAL-FILM 10K +/- 1% 250mW 200V 50 ppm/DEG.C, SURFACE MOUNTED, SIZE MINI-MELF, (8mm	VISHAY COMPONENTS	SMM0204-10K-1%50ppm
R226	24811/191	RESISTOR-FIXED METAL-FILM 5K62 +/- 1% 250mW 200V 50 ppm/DEG.C, SURFACE MOUNTED, SIZE MINI-MELF,	VISHAY COMPONENTS	SMM0204-5K62-1%50ppm
R227	24811/207	RESISTOR-FIXED METAL-FILM 27K4 +/- 1% 250mW 200V 50 ppm/DEG.C, SURFACE MOUNTED, SIZE MINI-MELF,	VISHAY COMPONENTS	SMM0204-27K4-1%50ppm
R228	24811/224	RESISTOR-FIXED METAL-FILM 130K +/- 1% 250mW 200V 50 ppm/DEG.C, SURFACE MOUNTED, SIZE MINI-MELF,	VISHAY COMPONENTS	SMM0204-130K-1%50ppm
R229	24811/201	RESISTOR-FIXED METAL-FILM 15K +/- 1% 250mW 200V 50 ppm/DEG.C, SURFACE MOUNTED, SIZE MINI-MELF, (8mm	VISHAY COMPONENTS	SMM0204-15K-1%50ppm
R230	24811/179	RESISTOR-FIXED METAL-FILM 1K82 +/- 1% 250mW 200V 50 ppm/DEG.C, SURFACE MOUNTED, SIZE MINI-MELF,	VISHAY COMPONENTS	SMM0204-1K82-1%50ppm
R231	24811/195	RESISTOR-FIXED METAL-FILM 8K25 +/- 1% 250mW 200V 50 ppm/DEG.C, SURFACE MOUNTED, SIZE MINI-MELF,	VISHAY COMPONENTS	SMM0204-8K25-1%50ppm
R232	25711/644	RESISTOR-VARIABLE CERMET LINEAR, 100K 10% 500mW 200V 150 ppm/DEG.C, SINGLE-TURN, HORIZONTAL-PCB,	VISHAY COMPONENTS	TYA-100K-10%
R233	24753/640	RESISTOR-FIXED METAL-FILM 4K32 +/- 0.5% 250mW 200V 50 ppm/DEG.C, AXIAL, (LOOSE OR TAPED).	VISHAY COMPONENTS	EE.10-4K32-D-T-2
R234	24811/644	RESISTOR-FIXED METAL-FILM 39K2 +/- 0.1% 250mW 200V 15 ppm/DEG.C, SURFACE MOUNTED, SIZE MINI-MELF,	VISHAY COMPONENTS	SMM0204-39K2-0.1%-15
R235	24811/193	RESISTOR-FIXED METAL-FILM 6K81 +/- 1% 250mW 200V 50 ppm/DEG.C, SURFACE MOUNTED, SIZE MINI-MELF,	VISHAY COMPONENTS	SMM0204-6K81-1%50ppm

Audio processor B1/2 (contd.)

Cir. Ref.	MI part number	Description	Manufacturer	Manufacturer's part number
R236	24811/197	RESISTOR-FIXED METAL-FILM 10K +/- 1% 250mW 200V 50 ppm/DEG.C, SURFACE MOUNTED, SIZE MINI-MELF, (8mm	VISHAY COMPONENTS	SMM0204-10K-1%50ppm
R237	24811/195	RESISTOR-FIXED METAL-FILM 8K25 +/- 1% 250mW 200V 50 ppm/DEG.C, SURFACE MOUNTED, SIZE MINI-MELF,	VISHAY COMPONENTS	SMM0204-8K25-1%50ppm
R238	25711/638	RESISTOR-VARIABLE CERMET LINEAR, 1K 10% 500mW 200V 150 ppm/DEG.C, SINGLE-TURN, HORIZONTAL-PCB,	VISHAY COMPONENTS	TYA-1K-10%
R239	24811/245	RESISTOR-FIXED METAL-FILM 1M +/- 1% 250mW 200V 50 ppm/DEG.C, SURFACE MOUNTED, SIZE MINI-MELF, (8mm	VISHAY COMPONENTS	SMM0204-1M0-1%50ppm
R240	24811/602	RESISTOR-FIXED METAL-FILM 10K +/- 0.1% 250mW 200V 15 ppm/DEG.C, SURFACE MOUNTED, SIZE MINI-MELF,	VISHAY COMPONENTS	SMM0204-10K0-0.1%-15
R241	24811/602	RESISTOR-FIXED METAL-FILM 10K +/- 0.1% 250mW 200V 15 ppm/DEG.C, SURFACE MOUNTED, SIZE MINI-MELF,	VISHAY COMPONENTS	SMM0204-10K0-0.1%-15
R242	24811/206	RESISTOR-FIXED METAL-FILM 24K3 +/- 1% 250mW 200V 50 ppm/DEG.C, SURFACE MOUNTED, SIZE MINI-MELF,	VISHAY COMPONENTS	SMM0204-24K3-1%50ppm
R243	24811/202	RESISTOR-FIXED METAL-FILM 16K2 +/- 1% 250mW 200V 50 ppm/DEG.C, SURFACE MOUNTED, SIZE MINI-MELF,	VISHAY COMPONENTS	SMM0204-16K2-1%50ppm
R244	24811/607	RESISTOR-FIXED METAL-FILM 20K +/- 0.1% 250mW 200V 15 ppm/DEG.C, SURFACE MOUNTED, SIZE MINI-MELF,	VISHAY COMPONENTS	SMM0204-20K0-0.1%-15
R245 to R249	24811/189	RESISTOR-FIXED METAL-FILM 4K75 +/- 1% 250mW 200V 50 ppm/DEG.C, SURFACE MOUNTED, SIZE MINI-MELF,	VISHAY COMPONENTS	SMM0204-4K75-1%50ppm
R250	24811/211	RESISTOR-FIXED METAL-FILM 39K2 +/- 1% 250mW 200V 50 ppm/DEG.C, SURFACE MOUNTED, SIZE MINI-MELF,	VISHAY COMPONENTS	SMM0204-39K2-1%50ppm
R251	24811/178	RESISTOR-FIXED METAL-FILM 1K62 +/- 1% 250mW 200V 50 ppm/DEG.C, SURFACE MOUNTED, SIZE MINI-MELF,	VISHAY COMPONENTS	SMM0204-1K62-1%50ppm
R252	24811/601	RESISTOR-FIXED METAL-FILM 33K2 +/- 0.1% 250mW 200V 15 ppm/DEG.C, SURFACE MOUNTED, SIZE MINI-MELF,	VISHAY COMPONENTS	SMM0204-33K2-0.1%-15
R253	24732/306	RESISTOR-FIXED METAL-FILM 6K +/- 0.25% 250mW 200V 50 ppm/DEG.C, AXIAL, (TAPED).	VISHAY COMPONENTS	EE.10-6K0-C-T-2
R254	24753/626	RESISTOR-FIXED METAL-FILM 2K +/- 0.5% 250mW 200V 50 ppm/DEG.C, AXIAL, (TAPED).	VISHAY COMPONENTS	EE.10-2K0-D-T-2
R255	24753/624	RESISTOR-FIXED METAL-FILM 1K +/- 0.5% 250mW 200V 50 ppm/DEG.C, AXIAL, (TAPED).	VISHAY COMPONENTS	EE.10-1K0-D-T-2
R256	24753/624	RESISTOR-FIXED METAL-FILM 1K +/- 0.5% 250mW 200V 50 ppm/DEG.C, AXIAL, (TAPED).	VISHAY COMPONENTS	EE.10-1K0-D-T-2
R257	24811/189	RESISTOR-FIXED METAL-FILM 4K75 +/- 1% 250mW 200V 50 ppm/DEG.C, SURFACE MOUNTED, SIZE MINI-MELF,	VISHAY COMPONENTS	SMM0204-4K75-1%50ppm
R258	24811/189	RESISTOR-FIXED METAL-FILM 4K75 +/- 1% 250mW 200V 50 ppm/DEG.C, SURFACE MOUNTED, SIZE MINI-MELF,	VISHAY COMPONENTS	SMM0204-4K75-1%50ppm
R259	24811/165	RESISTOR-FIXED METAL-FILM 475R +/- 1% 250mW 200V 50 ppm/DEG.C, SURFACE MOUNTED, SIZE MINI-MELF,	VISHAY COMPONENTS	SMM0204-475R-1%50ppm
R260	24753/570	RESISTOR-FIXED METAL-FILM 6K92 +/- 0.5% 250mW 200V 50 ppm/DEG.C, AXIAL, (TAPED).	VISHAY COMPONENTS	EE.10-6K92-D-T-2
R261	24732/261	RESISTOR-FIXED METAL-FILM 59K +/- 0.25% 250mW 200V 25 ppm/DEG.C, AXIAL, (TAPED).	VISHAY COMPONENTS	EE.10-59K-C-T-9
R262	24811/190	RESISTOR-FIXED METAL-FILM 5K11 +/- 1% 250mW 200V 50 ppm/DEG.C, SURFACE MOUNTED, SIZE MINI-MELF,	VISHAY COMPONENTS	SMM0204-5K11-1%50ppm
R263	25711/637	RESISTOR-VARIABLE CERMET LINEAR, 500R 10% 500mW 200V 150 ppm/DEG.C, SINGLE-TURN, HORIZONTAL-PCB,	VISHAY COMPONENTS	TYA-500R-10%
R264	24753/230	RESISTOR-FIXED METAL-FILM 237K +/- 0.5% 250mW 200V 50 ppm/DEG.C, AXIAL, (TAPED).	VISHAY COMPONENTS	EE.10-237K-D-T-2
R265	24732/265	RESISTOR-FIXED METAL-FILM 19K6 +/- 0.25% 250mW 200V 25 ppm/DEG.C, AXIAL, (TAPED).	VISHAY COMPONENTS	EE.10-19K6-C-T-9

Cir. Ref.	MI part number	Description	Manufacturer	Manufacturer's part number
Audio processor B1/2 (contd.)				
R266	24811/644	RESISTOR-FIXED METAL-FILM 39K2 +/- 0.1% 250mW 200V 15 ppm/DEG.C, SURFACE MOUNTED, SIZE MINI-MELF,	VISHAY COMPONENTS	SMM0204-39K2-0.1%-15
R267	24811/173	RESISTOR-FIXED METAL-FILM 1K +/- 1% 250mW 200V 50 ppm/DEG.C, SURFACE MOUNTED, SIZE MINI-MELF, (8mm	VISHAY COMPONENTS	SMM0204-1K0-1%-50ppm
R270	24753/583	RESISTOR-FIXED METAL-FILM 61K9 +/- 0.5% 250mW 200V 50 ppm/DEG.C, AXIAL, (TAPED).	VISHAY COMPONENTS	EE.10-61K9-D-T-2
R271	24732/261	RESISTOR-FIXED METAL-FILM 59K +/- 0.25% 250mW 200V 25 ppm/DEG.C, AXIAL, (TAPED).	VISHAY COMPONENTS	EE.10-59K-C-T-9
R272	24811/190	RESISTOR-FIXED METAL-FILM 5K11 +/- 1% 250mW 200V 50 ppm/DEG.C, SURFACE MOUNTED, SIZE MINI-MELF,	VISHAY COMPONENTS	SMM0204-5K11-1%50ppm
R273	25711/637	RESISTOR-VARIABLE CERMET LINEAR, 500R 10% 500mW 200V 150 ppm/DEG.C, SINGLE-TURN, HORIZONTAL-PCB,	VISHAY COMPONENTS	TYA-500R-10%
R274	24753/230	RESISTOR-FIXED METAL-FILM 237K +/- 0.5% 250mW 200V 50 ppm/DEG.C, AXIAL, (TAPED).	VISHAY COMPONENTS	EE.10-237K-D-T-2
R275	24732/265	RESISTOR-FIXED METAL-FILM 19K6 +/- 0.25% 250mW 200V 25 ppm/DEG.C, AXIAL, (TAPED).	VISHAY COMPONENTS	EE.10-19K6-C-T-9
R276	24811/644	RESISTOR-FIXED METAL-FILM 39K2 +/- 0.1% 250mW 200V 15 ppm/DEG.C, SURFACE MOUNTED, SIZE MINI-MELF,	VISHAY COMPONENTS	SMM0204-39K2-0.1%-15
R277	24753/378	RESISTOR-FIXED METAL-FILM 90K9 +/- 0.5% 250mW 200V 50 ppm/DEG.C, AXIAL, (TAPED).	VISHAY COMPONENTS	EE.10-90K9-D-T-2
R278	24811/165	RESISTOR-FIXED METAL-FILM 475R +/- 1% 250mW 200V 50 ppm/DEG.C, SURFACE MOUNTED, SIZE MINI-MELF,	VISHAY COMPONENTS	SMM0204-475R-1%50ppm
R279	24811/165	RESISTOR-FIXED METAL-FILM 475R +/- 1% 250mW 200V 50 ppm/DEG.C, SURFACE MOUNTED, SIZE MINI-MELF,	VISHAY COMPONENTS	SMM0204-475R-1%50ppm
R280	24811/207	RESISTOR-FIXED METAL-FILM 27K4 +/- 1% 250mW 200V 50 ppm/DEG.C, SURFACE MOUNTED, SIZE MINI-MELF,	VISHAY COMPONENTS	SMM0204-27K4-1%50ppm
R281	24811/207	RESISTOR-FIXED METAL-FILM 27K4 +/- 1% 250mW 200V 50 ppm/DEG.C, SURFACE MOUNTED, SIZE MINI-MELF,	VISHAY COMPONENTS	SMM0204-27K4-1%50ppm
R282	24811/165	RESISTOR-FIXED METAL-FILM 475R +/- 1% 250mW 200V 50 ppm/DEG.C, SURFACE MOUNTED, SIZE MINI-MELF,	VISHAY COMPONENTS	SMM0204-475R-1%50ppm
R283	24811/655	RESISTOR-FIXED METAL-FILM 7K68 +/- 0.1% 250mW 200V 15 ppm/DEG.C, SURFACE MOUNTED, SIZE MINI-MELF,	VISHAY COMPONENTS	SMM0204-7K68-0.1%-15
R284	24811/233	RESISTOR-FIXED METAL-FILM 332K +/- 1% 250mW 200V 50 ppm/DEG.C, SURFACE MOUNTED, SIZE MINI-MELF,	VISHAY COMPONENTS	SMM0204-332K-1%50ppm
R285	24811/165	RESISTOR-FIXED METAL-FILM 475R +/- 1% 250mW 200V 50 ppm/DEG.C, SURFACE MOUNTED, SIZE MINI-MELF,	VISHAY COMPONENTS	SMM0204-475R-1%50ppm
R286	24811/654	RESISTOR-FIXED METAL-FILM 19K6 +/- 0.1% 250mW 200V 15 ppm/DEG.C, SURFACE MOUNTED, SIZE MINI-MELF,	VISHAY COMPONENTS	SMM0204-19K6-0.1%-15
R287	24811/656	RESISTOR-FIXED METAL-FILM 63K4 +/- 0.1% 250mW 200V 15 ppm/DEG.C, SURFACE MOUNTED, SIZE MINI-MELF,	VISHAY COMPONENTS	SMM0204-63K4-0.1%-15
R288	24811/194	RESISTOR-FIXED METAL-FILM 7K5 +/- 1% 250mW 200V 50 ppm/DEG.C, SURFACE MOUNTED, SIZE MINI-MELF, (8mm	VISHAY COMPONENTS	SMM0204-7K5-1%50ppm
R289	24811/194	RESISTOR-FIXED METAL-FILM 7K5 +/- 1% 250mW 200V 50 ppm/DEG.C, SURFACE MOUNTED, SIZE MINI-MELF, (8mm	VISHAY COMPONENTS	SMM0204-7K5-1%50ppm
R290	24811/201	RESISTOR-FIXED METAL-FILM 15K +/- 1% 250mW 200V 50 ppm/DEG.C, SURFACE MOUNTED, SIZE MINI-MELF, (8mm	VISHAY COMPONENTS	SMM0204-15K-1%50ppm
R291	24811/199	RESISTOR-FIXED METAL-FILM 12K1 +/- 1% 250mW 200V 50 ppm/DEG.C, SURFACE MOUNTED, SIZE MINI-MELF,	VISHAY COMPONENTS	SMM0204-12K1-1%50ppm
R292	24811/193	RESISTOR-FIXED METAL-FILM 6K81 +/- 1% 250mW 200V 50 ppm/DEG.C, SURFACE MOUNTED, SIZE MINI-MELF,	VISHAY COMPONENTS	SMM0204-6K81-1%50ppm
R293	24811/175	RESISTOR-FIXED METAL-FILM 1K21 +/- 1% 250mW 200V 50 ppm/DEG.C, SURFACE MOUNTED, SIZE MINI-MELF,	VISHAY COMPONENTS	SMM0204-1K21-1%50ppm

Audio processor B1/2 (contd.)

Cir. Ref.	MI part number	Description	Manufacturer	Manufacturer's part number
R294	24811/175	RESISTOR-FIXED METAL-FILM 1K21 +/- 1% 250mW 200V 50 ppm/DEG.C, SURFACE MOUNTED, SIZE MINI-MELF,	VISHAY COMPONENTS	SMM0204-1K21-1%50ppm
R295	24811/229	RESISTOR-FIXED METAL-FILM 221K +/- 1% 250mW 200V 50 ppm/DEG.C, SURFACE MOUNTED, SIZE MINI-MELF,	VISHAY COMPONENTS	SMM0204-221K-1%50ppm
R296	24811/173	RESISTOR-FIXED METAL-FILM 1K +/- 1% 250mW 200V 50 ppm/DEG.C, SURFACE MOUNTED, SIZE MINI-MELF, (8mm	VISHAY COMPONENTS	SMM0204-1K0-1%-50ppm
R297	24811/125	RESISTOR-FIXED METAL-FILM 10R +/- 1% 250mW 200V 50 ppm/DEG.C, SURFACE MOUNTED, SIZE MINI-MELF, (8mm	VISHAY COMPONENTS	SMM0204-10R-1%-50ppm
R299	24811/245	RESISTOR-FIXED METAL-FILM 1M +/- 1% 250mW 200V 50 ppm/DEG.C, SURFACE MOUNTED, SIZE MINI-MELF, (8mm	VISHAY COMPONENTS	SMM0204-1M0-1%50ppm
R300	24811/229	RESISTOR-FIXED METAL-FILM 221K +/- 1% 250mW 200V 50 ppm/DEG.C, SURFACE MOUNTED, SIZE MINI-MELF,	VISHAY COMPONENTS	SMM0204-221K-1%50ppm
R301	24811/233	RESISTOR-FIXED METAL-FILM 332K +/- 1% 250mW 200V 50 ppm/DEG.C, SURFACE MOUNTED, SIZE MINI-MELF,	VISHAY COMPONENTS	SMM0204-332K-1%50ppm
R302	24811/234	RESISTOR-FIXED METAL-FILM 365K +/- 1% 250mW 200V 50 ppm/DEG.C, SURFACE MOUNTED, SIZE MINI-MELF,	VISHAY COMPONENTS	SMM0204-365K-1%50ppm
R303	24811/217	RESISTOR-FIXED METAL-FILM 68K1 +/- 1% 250mW 200V 50 ppm/DEG.C, SURFACE MOUNTED, SIZE MINI-MELF,	VISHAY COMPONENTS	SMM0204-68K1-1%50ppm
R304	24811/245	RESISTOR-FIXED METAL-FILM 1M +/- 1% 250mW 200V 50 ppm/DEG.C, SURFACE MOUNTED, SIZE MINI-MELF, (8mm	VISHAY COMPONENTS	SMM0204-1M0-1%50ppm
R305	24811/113	RESISTOR-FIXED METAL-FILM 3R32 +/- 1% 250mW 200V 50 ppm/DEG.C, SURFACE MOUNTED, SIZE MINI-MELF,	VISHAY COMPONENTS	SMM0204-3R32-1%50ppm
R306	24811/173	RESISTOR-FIXED METAL-FILM 1K +/- 1% 250mW 200V 50 ppm/DEG.C, SURFACE MOUNTED, SIZE MINI-MELF, (8mm	VISHAY COMPONENTS	SMM0204-1K0-1%-50ppm
R307	24811/209	RESISTOR-FIXED METAL-FILM 33K2 +/- 1% 250mW 200V 50 ppm/DEG.C, SURFACE MOUNTED, SIZE MINI-MELF,	VISHAY COMPONENTS	SMM0204-33K2-1%50ppm
R308	24811/245	RESISTOR-FIXED METAL-FILM 1M +/- 1% 250mW 200V 50 ppm/DEG.C, SURFACE MOUNTED, SIZE MINI-MELF, (8mm	VISHAY COMPONENTS	SMM0204-1M0-1%50ppm
R310	24681/549	RESISTOR-NETWORK BUSSED, THICK-FILM, 22K 2% 600mW 50V 200 ppm/DEG.C, 15 RESISTORS, SURFACE MOUNTED,	VISHAY COMPONENTS	SOMC16-01-223-G-TUBE
R312	24811/165	RESISTOR-FIXED METAL-FILM 475R +/- 1% 250mW 200V 50 ppm/DEG.C, SURFACE MOUNTED, SIZE MINI-MELF,	VISHAY COMPONENTS	SMM0204-475R-1%50ppm
R315	24811/200	RESISTOR-FIXED METAL-FILM 13K +/- 1% 250mW 200V 50 ppm/DEG.C, SURFACE MOUNTED, SIZE MINI-MELF, (8mm	VISHAY COMPONENTS	SMM0204-13K-1%50ppm
R320	24811/189	RESISTOR-FIXED METAL-FILM 4K75 +/- 1% 250mW 200V 50 ppm/DEG.C, SURFACE MOUNTED, SIZE MINI-MELF,	VISHAY COMPONENTS	SMM0204-4K75-1%50ppm
R321	24811/189	RESISTOR-FIXED METAL-FILM 4K75 +/- 1% 250mW 200V 50 ppm/DEG.C, SURFACE MOUNTED, SIZE MINI-MELF,	VISHAY COMPONENTS	SMM0204-4K75-1%50ppm
R322	24811/173	RESISTOR-FIXED METAL-FILM 1K +/- 1% 250mW 200V 50 ppm/DEG.C, SURFACE MOUNTED, SIZE MINI-MELF, (8mm	VISHAY COMPONENTS	SMM0204-1K0-1%-50ppm
R323	24811/217	RESISTOR-FIXED METAL-FILM 68K1 +/- 1% 250mW 200V 50 ppm/DEG.C, SURFACE MOUNTED, SIZE MINI-MELF,	VISHAY COMPONENTS	SMM0204-68K1-1%50ppm
R350	24811/189	RESISTOR-FIXED METAL-FILM 4K75 +/- 1% 250mW 200V 50 ppm/DEG.C, SURFACE MOUNTED, SIZE MINI-MELF,	VISHAY COMPONENTS	SMM0204-4K75-1%50ppm
R351	24811/189	RESISTOR-FIXED METAL-FILM 4K75 +/- 1% 250mW 200V 50 ppm/DEG.C, SURFACE MOUNTED, SIZE MINI-MELF,	VISHAY COMPONENTS	SMM0204-4K75-1%50ppm
RLA	23486/544	RELAY REED, SINGLE-POLE N/O, 5V COIL, 500R - CONTACTS 0.5A, 100V, INTERNAL DIODE, SPECIAL, PCB	PICKERING ELECTRONIC	106-1-A-5/920D
TR70	28487/818	TRANSISTOR NPN BIPOLAR BFS20... 20V 450MHz 200mW 25mA 40hFE MIN @ 7mA, MARKING CODE G1, SURFACE	PHILIPS	BFS20

Cir. Ref.	MI part number	Description	Manufacturer	Manufacturer's part number
Audio processor B1/2 (contd.)				
TR90	28433/828	TRANSISTOR PNP BIPOLAR BC858B... 30V 150MHz 200mW 100mA 220hFE MIN @ 2mA, MARKING CODE 3K, SURFACE	PHILIPS	BC858B
TR91	28453/829	TRANSISTOR NPN BIPOLAR BC848B... 30V 200MHz 200mW 100mA 290hFE @ 2mA, NOISE 2dB @ 1KHz, MARKING CODE	PHILIPS	BC848B
TR150	28453/829	TRANSISTOR NPN BIPOLAR BC848B... 30V 200MHz 200mW 100mA 290hFE @ 2mA, NOISE 2dB @ 1KHz, MARKING CODE	PHILIPS	BC848B
TR230	28459/084	TRANSISTOR N-CHANNEL-ENHANCE MOSFET BST82... 80V 300mW 175mA 7R SWITCH ON & OFF <10nS, MARKING CODE	PHILIPS	BST82
X100	23642/944	FILTER HF, PCB-MOUNT, CERAMIC, RADIAL, 10.7MHz, 280kHz B/WIDTH @ -3dB, 650kHz B/WIDTH @ -20dB, 330	MURATA ELECTRONICS	SFE10.7MA5-A
X101	23642/944	FILTER HF, PCB-MOUNT, CERAMIC, RADIAL, 10.7MHz, 280kHz B/WIDTH @ -3dB, 650kHz B/WIDTH @ -20dB, 330	MURATA ELECTRONICS	SFE10.7MA5-A

Cir. Ref.	MI part number	Description	Manufacturer	Manufacturer's part number

Microprocessor B2/1

When ordering, prefix circuit reference with B2/1.

	44830-110	Complete unit	Issue 002	
C1	26386/875	CAPACITOR-FIXED CERAMIC 10nF +/-10% 50V X7R/2C1, MULTILAYER, SURFACE-MOUNTED, SIZE 0805, NICKEL	ROHM ELECTRONICS LTD	MCH21-5C-103-KP
C2	26386/875	CAPACITOR-FIXED CERAMIC 10nF +/-10% 50V X7R/2C1, MULTILAYER, SURFACE-MOUNTED, SIZE 0805, NICKEL	ROHM ELECTRONICS LTD	MCH21-5C-103-KP
C5	26582/427	CAPACITOR-FIXED POLYESTER 470nF +/-10% 63V 330 ppm/DEG.C, RADIAL, 5mm PWP, (TAPED).	VISHAY COMPONENTS	MKT-1826-447/065
C6	26386/759	CAPACITOR-FIXED CERAMIC 22nF +/-20% 50V X7R/2C1, MULTILAYER, SURFACE-MOUNTED, SIZE 1206, NICKEL	PHILIPS	1206-2R-223-K9-BBC
C7	26451/006	CAPACITOR-FIXED ALUMINIUM 22uF +/-20% 16V ELECTROLYTIC, SURFACE-MOUNTED, SIZE 5.3 x 5.3mm,	RUBYCON CAPACITORS	16-REV-22
C8	26386/875	CAPACITOR-FIXED CERAMIC 10nF +/-10% 50V X7R/2C1, MULTILAYER, SURFACE-MOUNTED, SIZE 0805, NICKEL	ROHM ELECTRONICS LTD	MCH21-5C-103-KP
C9	26386/899	CAPACITOR-FIXED CERAMIC 100nF +/-10% 50V X7R/2C1, MULTILAYER, SURFACE-MOUNTED, SIZE 1206, NICKEL	ROHM ELECTRONICS LTD	MCH31-5C-104-KP
C10	26386/875	CAPACITOR-FIXED CERAMIC 10nF +/-10% 50V X7R/2C1, MULTILAYER, SURFACE-MOUNTED, SIZE 0805, NICKEL	ROHM ELECTRONICS LTD	MCH21-5C-103-KP
C11	26386/830	CAPACITOR-FIXED CERAMIC 330pF +/-5% 50V NP0 MULTILAYER, SURFACE-MOUNTED, SIZE 0805, NICKEL	ROHM ELECTRONICS LTD	MCH21-5A-331-JP
C12	26386/830	CAPACITOR-FIXED CERAMIC 330pF +/-5% 50V NP0 MULTILAYER, SURFACE-MOUNTED, SIZE 0805, NICKEL	ROHM ELECTRONICS LTD	MCH21-5A-331-JP
C13	26343/767	CAPACITOR-FIXED CERAMIC 10pF +/-5% 50V NPO MULTILAYER, SURFACE-MOUNTED, SIZE 0805, NICKEL	ROHM ELECTRONICS LTD	MCH21-5A-100-DP
C14	26343/767	CAPACITOR-FIXED CERAMIC 10pF +/-5% 50V NPO MULTILAYER, SURFACE-MOUNTED, SIZE 0805, NICKEL	ROHM ELECTRONICS LTD	MCH21-5A-100-DP
C15 to C17	26386/875	CAPACITOR-FIXED CERAMIC 10nF +/-10% 50V X7R/2C1, MULTILAYER, SURFACE-MOUNTED, SIZE 0805, NICKEL	ROHM ELECTRONICS LTD	MCH21-5C-103-KP
C18	26386/760	CAPACITOR-FIXED CERAMIC 220nF +/-10% 50V X7R MULTILAYER, SURFACE-MOUNTED, SIZE 1210, NICKEL	PHILIPS	1210-2R-224-K9-BBC
C19	26582/427	CAPACITOR-FIXED POLYESTER 470nF +/-10% 63V 330 ppm/DEG.C, RADIAL, 5mm PWP, (TAPED).	VISHAY COMPONENTS	MKT-1826-447/065
C20	26451/004	CAPACITOR-FIXED ALUMINIUM 10uF +/-20% 35V ELECTROLYTIC, SURFACE-MOUNTED, SIZE 5.3 x 5.3mm,	DUBILIER CAPACITORS	DVC-10/35-T/R
C21	26386/875	CAPACITOR-FIXED CERAMIC 10nF +/-10% 50V X7R/2C1, MULTILAYER, SURFACE-MOUNTED, SIZE 0805, NICKEL	ROHM ELECTRONICS LTD	MCH21-5C-103-KP
C22	26386/777	CAPACITOR-FIXED CERAMIC 47nF +/-20% 63V X7R/2C1, MULTILAYER, SURFACE-MOUNTED, SIZE 1206, NICKEL	PHILIPS	1206-2R-473-K9-BBC
C23	26386/760	CAPACITOR-FIXED CERAMIC 220nF +/-10% 50V X7R MULTILAYER, SURFACE-MOUNTED, SIZE 1210, NICKEL	PHILIPS	1210-2R-224-K9-BBC
C24	26451/004	CAPACITOR-FIXED ALUMINIUM 10uF +/-20% 35V ELECTROLYTIC, SURFACE-MOUNTED, SIZE 5.3 x 5.3mm,	DUBILIER CAPACITORS	DVC-10/35-T/R
C25	26451/004	CAPACITOR-FIXED ALUMINIUM 10uF +/-20% 35V ELECTROLYTIC, SURFACE-MOUNTED, SIZE 5.3 x 5.3mm,	DUBILIER CAPACITORS	DVC-10/35-T/R
C26	26582/427	CAPACITOR-FIXED POLYESTER 470nF +/-10% 63V 330 ppm/DEG.C, RADIAL, 5mm PWP, (TAPED).	VISHAY COMPONENTS	MKT-1826-447/065
C27	26386/760	CAPACITOR-FIXED CERAMIC 220nF +/-10% 50V X7R MULTILAYER, SURFACE-MOUNTED, SIZE 1210, NICKEL	PHILIPS	1210-2R-224-K9-BBC

Microprocessor B2/1 (contd.)

Cir. Ref.	MI part number	Description	Manufacturer	Manufacturer's part number
C28	26386/760	CAPACITOR-FIXED CERAMIC 220nF +/-10% 50V X7R MULTILAYER, SURFACE-MOUNTED, SIZE 1210, NICKEL	PHILIPS	1210-2R-224-K9-BBC
C29	26451/004	CAPACITOR-FIXED ALUMINIUM 10uF +/-20% 35V ELECTROLYTIC, SURFACE-MOUNTED, SIZE 5.3 x 5.3mm,	DUBILIER CAPACITORS	DVC-10/35-T/R
C30	26386/863	CAPACITOR-FIXED CERAMIC 1nF +/-10% 50V X7R/2C1, MULTILAYER, SURFACE-MOUNTED, SIZE 0805, NICKEL	ROHM ELECTRONICS LTD	MCH21-5C-102-KP
C31	26451/004	CAPACITOR-FIXED ALUMINIUM 10uF +/-20% 35V ELECTROLYTIC, SURFACE-MOUNTED, SIZE 5.3 x 5.3mm,	DUBILIER CAPACITORS	DVC-10/35-T/R
C32	26451/008	CAPACITOR-FIXED ALUMINIUM 47uF +/-20% 6.3V ELECTROLYTIC, SURFACE-MOUNTED, SIZE 5.3 x 5.3mm,	PANASONIC INDUSTRIAL	ECE-V-0JA-470P
C33	26451/008	CAPACITOR-FIXED ALUMINIUM 47uF +/-20% 6.3V ELECTROLYTIC, SURFACE-MOUNTED, SIZE 5.3 x 5.3mm,	PANASONIC INDUSTRIAL	ECE-V-0JA-470P
C34	26451/006	CAPACITOR-FIXED ALUMINIUM 22uF +/-20% 16V ELECTROLYTIC, SURFACE-MOUNTED, SIZE 5.3 x 5.3mm,	RUBYCON CAPACITORS	16-REV-22
C35	26451/006	CAPACITOR-FIXED ALUMINIUM 22uF +/-20% 16V ELECTROLYTIC, SURFACE-MOUNTED, SIZE 5.3 x 5.3mm,	RUBYCON CAPACITORS	16-REV-22
C36	26386/899	CAPACITOR-FIXED CERAMIC 100nF +/-10% 50V X7R/2C1, MULTILAYER, SURFACE-MOUNTED, SIZE 1206, NICKEL	ROHM ELECTRONICS LTD	MCH31-5C-104-KP
C37	26451/004	CAPACITOR-FIXED ALUMINIUM 10uF +/-20% 35V ELECTROLYTIC, SURFACE-MOUNTED, SIZE 5.3 x 5.3mm,	DUBILIER CAPACITORS	DVC-10/35-T/R
C38	26451/006	CAPACITOR-FIXED ALUMINIUM 22uF +/-20% 16V ELECTROLYTIC, SURFACE-MOUNTED, SIZE 5.3 x 5.3mm,	RUBYCON CAPACITORS	16-REV-22
C39	26451/009	CAPACITOR-FIXED ALUMINIUM 47uF +/-20% 16V ELECTROLYTIC, SURFACE-MOUNTED, SIZE 6.6 x 6.6mm,	PANASONIC INDUSTRIAL	ECE-V-1CA-470P
C40	26386/899	CAPACITOR-FIXED CERAMIC 100nF +/-10% 50V X7R/2C1, MULTILAYER, SURFACE-MOUNTED, SIZE 1206, NICKEL	ROHM ELECTRONICS LTD	MCH31-5C-104-KP
C41 to C43	26582/427	CAPACITOR-FIXED POLYESTER 470nF +/-10% 63V 330 ppm/DEG.C, RADIAL, 5mm PWP, (TAPED).	VISHAY COMPONENTS	MKT-1826-447/065
C44 to C46	26451/006	CAPACITOR-FIXED ALUMINIUM 22uF +/-20% 16V ELECTROLYTIC, SURFACE-MOUNTED, SIZE 5.3 x 5.3mm,	RUBYCON CAPACITORS	16-REV-22
C47	26386/760	CAPACITOR-FIXED CERAMIC 220nF +/-10% 50V X7R MULTILAYER, SURFACE-MOUNTED, SIZE 1210, NICKEL	PHILIPS	1210-2R-224-K9-BBC
C48	26386/777	CAPACITOR-FIXED CERAMIC 47nF +/-20% 63V X7R/2C1, MULTILAYER, SURFACE-MOUNTED, SIZE 1206, NICKEL	PHILIPS	1206-2R-473-K9-BBC
C49	26386/760	CAPACITOR-FIXED CERAMIC 220nF +/-10% 50V X7R MULTILAYER, SURFACE-MOUNTED, SIZE 1210, NICKEL	PHILIPS	1210-2R-224-K9-BBC
C50	26386/899	CAPACITOR-FIXED CERAMIC 100nF +/-10% 50V X7R/2C1, MULTILAYER, SURFACE-MOUNTED, SIZE 1206, NICKEL	ROHM ELECTRONICS LTD	MCH31-5C-104-KP
C51	26386/899	CAPACITOR-FIXED CERAMIC 100nF +/-10% 50V X7R/2C1, MULTILAYER, SURFACE-MOUNTED, SIZE 1206, NICKEL	ROHM ELECTRONICS LTD	MCH31-5C-104-KP
C52	26451/009	CAPACITOR-FIXED ALUMINIUM 47uF +/-20% 16V ELECTROLYTIC, SURFACE-MOUNTED, SIZE 6.6 x 6.6mm,	PANASONIC INDUSTRIAL	ECE-V-1CA-470P
C53	26386/899	CAPACITOR-FIXED CERAMIC 100nF +/-10% 50V X7R/2C1, MULTILAYER, SURFACE-MOUNTED, SIZE 1206, NICKEL	ROHM ELECTRONICS LTD	MCH31-5C-104-KP
C54 to C119	26386/875	CAPACITOR-FIXED CERAMIC 10nF +/-10% 50V X7R/2C1, MULTILAYER, SURFACE-MOUNTED, SIZE 0805, NICKEL	ROHM ELECTRONICS LTD	MCH21-5C-103-KP
C120	26451/006	CAPACITOR-FIXED ALUMINIUM 22uF +/-20% 16V ELECTROLYTIC, SURFACE-MOUNTED, SIZE 5.3 x 5.3mm,	RUBYCON CAPACITORS	16-REV-22
C121	26386/899	CAPACITOR-FIXED CERAMIC 100nF +/-10% 50V X7R/2C1, MULTILAYER, SURFACE-MOUNTED, SIZE 1206, NICKEL	ROHM ELECTRONICS LTD	MCH31-5C-104-KP
C122	26386/830	CAPACITOR-FIXED CERAMIC 330pF +/-5% 50V NP0 MULTILAYER, SURFACE-MOUNTED, SIZE 0805, NICKEL	ROHM ELECTRONICS LTD	MCH21-5A-331-JP

Cir. Ref.	MI part number	Description	Manufacturer	Manufacturer's part number
Microprocessor B2/1 (contd.)				
C123	26386/867	CAPACITOR-FIXED CERAMIC 2.2nF +/-10% 50V X7R/2C1, MULTILAYER, SURFACE-MOUNTED, SIZE 0805, NICKEL	ROHM ELECTRONICS LTD	MCH21-5C-222-KP
C124	26386/875	CAPACITOR-FIXED CERAMIC 10nF +/-10% 50V X7R/2C1, MULTILAYER, SURFACE-MOUNTED, SIZE 0805, NICKEL	ROHM ELECTRONICS LTD	MCH21-5C-103-KP
C125	26386/885	CAPACITOR-FIXED CERAMIC 68nF 10% 50V X7R MULTILAYER, SURFACE-MOUNTED, SIZE 1210, NICKEL	ROHM ELECTRONICS LTD	MCH32-5C-683-KP
C126 to C130	26386/875	CAPACITOR-FIXED CERAMIC 10nF +/-10% 50V X7R/2C1, MULTILAYER, SURFACE-MOUNTED, SIZE 0805, NICKEL	ROHM ELECTRONICS LTD	MCH21-5C-103-KP
C131	26451/006	CAPACITOR-FIXED ALUMINIUM 22uF +/-20% 16V ELECTROLYTIC, SURFACE-MOUNTED, SIZE 5.3 x 5.3mm,	RUBYCON CAPACITORS	16-REV-22
C133	26386/875	CAPACITOR-FIXED CERAMIC 10nF +/-10% 50V X7R/2C1, MULTILAYER, SURFACE-MOUNTED, SIZE 0805, NICKEL	ROHM ELECTRONICS LTD	MCH21-5C-103-KP
C134	26386/875	CAPACITOR-FIXED CERAMIC 10nF +/-10% 50V X7R/2C1, MULTILAYER, SURFACE-MOUNTED, SIZE 0805, NICKEL	ROHM ELECTRONICS LTD	MCH21-5C-103-KP
C135	26386/818	CAPACITOR-FIXED CERAMIC 33pF +/-5% 50V NP0 MULTILAYER, SURFACE-MOUNTED, SIZE 0805, NICKEL	ROHM ELECTRONICS LTD	MCH21-5A-330-JP
C136	26421/118	CAPACITOR-FIXED ALUMINIUM 100uF +/-20% 6.3V ELECTROLYTIC, RADIAL, 5mm PWP, (TAPED).	PANASONIC INDUSTRIAL	ECE-A-0J-KA-101-B
D1	28372/215	DIODE ZENER, BZX84-C12... 250mW 12V 5% 250mA MARKING CODE Y2, SURFACE MOUNTED, SOT-23, (8mm	PHILIPS	BZX84-C12 (Y2)
D2 to D6	28349/034	DIODE SMALL-SIGNAL, SCHOTTKY, BAT54... 160mW 30V 100mA MARKING CODE L4p, SURFACE MOUNTED, SOT-23,	PHILIPS	BAT54-T1
D7 to D10	28383/934	DIODE SMALL-SIGNAL, LL4148... 500mW 50V 150mA 1Vf @ 10mA, SURFACE MOUNTED, MINI-MELF, (8mm TAPE -	PHILIPS	PMLL4148L
D13 to D18	28383/901	DIODE SMALL-SIGNAL, BAV70... DUA5L, 70V 100mA 1.1Vf @ 50mA, COMMON CATHODE, MARKING CODE A4, SURFACE	PHILIPS	BAV70
D19 to D22	28335/670	DIODE BAND SWITCHING, BAT18... 35V 100mA 1pF MAX @ 20V, 1.2Vf @ 100mA, MARKING CODE A2, SURFACE	PHILIPS	BAT18/T1
D23	28371/302	DIODE ZENER, BZX84-C4V7... 250mW 4.7V 5% 250mA MARKING CODE Z1, SURFACE MOUNTED, SOT-23, (8mm	PHILIPS	BZX84-C4V7
D24	28371/412	DIODE ZENER, BZX84-C5V1... 250mW 5.1V 5% 250mA MARKING CODE Z2, SURFACE MOUNTED, SOT-23, (8mm	PHILIPS	BZX84-C5V1
D25	28371/412	DIODE ZENER, BZX84-C5V1... 250mW 5.1V 5% 250mA MARKING CODE Z2, SURFACE MOUNTED, SOT-23, (8mm	PHILIPS	BZX84-C5V1
D27	28349/034	DIODE SMALL-SIGNAL, SCHOTTKY, BAT54... 160mW 30V 100mA MARKING CODE L4p, SURFACE MOUNTED, SOT-23,	PHILIPS	BAT54-T1
D28	28349/034	DIODE SMALL-SIGNAL, SCHOTTKY, BAT54... 160mW 30V 100mA MARKING CODE L4p, SURFACE MOUNTED, SOT-23,	PHILIPS	BAT54-T1
D29	28335/670	DIODE BAND SWITCHING, BAT18... 35V 100mA 1pF MAX @ 20V, 1.2Vf @ 100mA, MARKING CODE A2, SURFACE	PHILIPS	BAT18/T1
D30	28335/670	DIODE BAND SWITCHING, BAT18... 35V 100mA 1pF MAX @ 20V, 1.2Vf @ 100mA, MARKING CODE A2, SURFACE	PHILIPS	BAT18/T1
D31	28383/901	DIODE SMALL-SIGNAL, BAV70... DUAL, 70V 100mA 1.1Vf @ 50mA, COMMON CATHODE, MARKING CODE A4, SURFACE	PHILIPS	BAV70
D32 to D34	28335/670	DIODE BAND SWITCHING, BAT18... 35V 100mA 1pF MAX @ 20V, 1.2Vf @ 100mA, MARKING CODE A2, SURFACE	PHILIPS	BAT18/T1
D35	28371/768	DIODE ZENER, BZX84-C9V1... 250mW 9.1V 5% 250mA MARKING CODE Z8, SURFACE MOUNTED, SOT-23, (8mm	PHILIPS	BZX84-C9V1
D36	28371/768	DIODE ZENER, BZX84-C9V1... 250mW 9.1V 5% 250mA MARKING CODE Z8, SURFACE MOUNTED, SOT-23, (8mm	PHILIPS	BZX84-C9V1

Cir. Ref.	MI part number	Description	Manufacturer	Manufacturer's part number
Microprocessor B2/1 (contd.)				
D37	28349/034	DIODE SMALL-SIGNAL, SCHOTTKY, BAT54... 160mW 30V 100mA MARKING CODE L4p, SURFACE MOUNTED, SOT-23,	PHILIPS	BAT54-T1
D38	28349/034	DIODE SMALL-SIGNAL, SCHOTTKY, BAT54... 160mW 30V 100mA MARKING CODE L4p, SURFACE MOUNTED, SOT-23,	PHILIPS	BAT54-T1
IC1	44535/315	IC-PROGRAMMED PAL SET OF 1 (2945)EXTERNAL STANDARD		
IC3	28469/543	IC-DIGITAL COUNTER 74HC390... 4 BIT, DUAL, DECADE RIPPLE, CMOS-H/SPEED, 16 PIN, SMALL-OUTLINE.	PHILIPS	74HC390D
IC4	28466/412	IC-DIGITAL EXCLUSIVE-OR 74HCT86... 2 INPUT, QUAD, CMOS-H/SPEED+TTL, 14 PIN, SMALL-OUTLINE.	PHILIPS	74HCT86D
IC5	28464/189	IC-DIGITAL COUNTER 74HC393... 4 BIT, DUAL, BINARY RIPPLE, CMOS-H/SPEED, 14 PIN, SMALL-OUTLINE.	PHILIPS	74HC393D
IC6	28462/136	IC-DIGITAL FLIP-FLOP/D-TYPE 74HCT74... 2 BIT, DUAL, POS EDGE TRIGGER, PLUS SET & CLEAR,	PHILIPS	74HCT74D
IC7	28461/815	IC-ANALOGUE PHASE-LOCKED-LOOP NE564D... 45MHz MIN, 16 PIN, SMALL-OUTLINE.	PHILIPS	NE564D
IC8	28469/543	IC-DIGITAL COUNTER 74HC390... 4 BIT, DUAL, DECADE RIPPLE, CMOS-H/SPEED, 16 PIN, SMALL-OUTLINE.	PHILIPS	74HC390D
IC9	28467/117	IC-MICRO STATIC-RAM, 128K x 8 BIT, HM628128... 5V, 100nS, 50uA MAX STANDBY CURRENT, CMOS, 32 PIN,	TOSHIBA (UK) LTD	TC551001BFL-10L
IC10	28469/338	IC-MICRO STATIC-RAM, 8K x 8 BIT, MK48Z08... 5V +/-5%, 150nS, NON-VOLATILE, WITH INTERNAL LITHIUM	SGS-THOMSON	MK48Z08B-10
IC11	44533/462	IC PROGRAMMED EPROM. SET OF 2	MARCONI INSTRUMENTS LTD	
IC12	44533/462	IC PROGRAMMED EPROM. SET OF 2	MARCONI INSTRUMENTS LTD	
IC13	28467/133	IC-MICRO PROCESSOR, 80C188... 16 BIT, 12.5MHz, CHMOS, 68 PIN, PLCC.	ADVANCED MICRO DEV	N80C188-12
IC14	28469/573	IC-DIGITAL LATCH 74ACT373... OCTAL, TRANSPARENT WITH TRI-STATE BUS, CMOS-ADVANCED+TTL, 20 PIN,	NAT. SEMICONDUCTOR	74ACT373SC
IC15	28469/573	IC-DIGITAL LATCH 74ACT373... OCTAL, TRANSPARENT WITH TRI-STATE BUS, CMOS-ADVANCED+TTL, 20 PIN,	NAT. SEMICONDUCTOR	74ACT373SC
IC16	28462/431	IC-DIGITAL LATCH 74HCT373... OCTAL, TRANSPARENT WITH TRI-STATE BUS, CMOS-H/SPEED+TTL, 20 PIN,	PHILIPS	74HCT373D
IC17	28469/027	IC-DIGITAL INVERTER 74HCT14... HEX, SCHMITT-TRIGGER OPERATION, CMOS-H/SPEED+TTL, 14	PHILIPS	74HCT14D
IC18	44535/285	IC-PROGRAMMED PAL, SET OF 1, 2945, MEMORY DECODER.	MARCONI INSTRUMENTS LTD	
IC19	44535/286	IC-PROGRAMMED PAL, SET OF 1, 2945, WAIT STATE GENERATOR.	MARCONI INSTRUMENTS LTD	
IC20	28466/122	IC-DIGITAL OR-GATE 74ACT32... 2 INPUT, QUAD, CMOS-ADVANCED+TTL, 14 PIN, SMALL-OUTLINE.	NAT. SEMICONDUCTOR	74ACT32SC
IC21	28469/049	IC-DIGITAL TRANSCEIVER 74HCT245... OCTAL, BI-DIRECTIONAL, TRI-STATE BUS, CMOS-H/SPEED+TTL,	PHILIPS	74HCT245D
IC22	28469/049	IC-DIGITAL TRANSCEIVER 74HCT245... OCTAL, BI-DIRECTIONAL, TRI-STATE BUS, CMOS-H/SPEED+TTL,	PHILIPS	74HCT245D
IC23	28466/122	IC-DIGITAL OR-GATE 74ACT32... 2 INPUT, QUAD, CMOS-ADVANCED+TTL, 14 PIN, SMALL-OUTLINE.	NAT. SEMICONDUCTOR	74ACT32SC
IC24	28465/053	IC-DIGITAL DECODER/DEMULTIPLEX 74HCT138... 3 INPUT, 8 BIT, SINGLE, INVERTING, 3 BIT ADDRESS,	PHILIPS	74HCT138D
IC25	28465/053	IC-DIGITAL DECODER/DEMULTIPLEX 74HCT138... 3 INPUT, 8 BIT, SINGLE, INVERTING, 3 BIT ADDRESS,	PHILIPS	74HCT138D

Microprocessor B2/1 (contd.)

Cir. Ref.	MI part number	Description	Manufacturer	Manufacturer's part number
IC26	28466/600	IC-DIGITAL NAND-GATE 74HC30... 8 INPUT, SINGLE, CMOS-H/SPEED, 14 PIN, SMALL-OUTLINE.	PHILIPS	74HC30D
IC27	28469/058	IC-DIGITAL BUFFER/LINE-DRIVER 74HC244... 4 INPUT, 4 BIT, DUAL, NON-INVERTING, TRI-STATE BUS,	PHILIPS	74HC244D
IC28	28462/157	IC-DIGITAL FLIP-FLOP/D-TYPE 74HC377... OCTAL, POS EDGE TRIGGER WITH DATA ENABLE, CMOS-H/SPEED, 20	PHILIPS	74HC377D
IC29	28466/412	IC-DIGITAL EXCLUSIVE-OR 74HCT86... 2 INPUT, QUAD, CMOS-H/SPEED+TTL, 14 PIN, SMALL-OUTLINE.	PHILIPS	74HCT86D
IC30	28469/772	IC-DIGITAL MULTIPLEXER 74HC153... 4 INPUT, 1 BIT, DUAL, NON-INVERTING, 4 TO 1, CMOS-H/SPEED, 16 PIN,	PHILIPS	74HC153D
IC31	28462/638	IC-DIGITAL FLIP-FLOP/D-TYPE 74HC74... 2 BIT, DUAL, POS EDGE TRIGGER, PLUS SET & CLEAR, CMOS-H/SPEED,	PHILIPS	74HC74D
IC32	28471/044	IC-MICRO EEPROM, 8K x 8 BIT, 28C64... 200nS, 64 BYTE PAGE WRITE MODE, CMOS, 32 PIN, PLCC.	ATMEL CORPORATION	AT28C64B-20JC
IC33	28469/058	IC-DIGITAL BUFFER/LINE-DRIVER 74HC244... 4 INPUT, 4 BIT, DUAL, NON-INVERTING, TRI-STATE BUS,	PHILIPS	74HC244D
IC34	28462/164	IC-DIGITAL FLIP-FLOP/D-TYPE 74AC377... OCTAL, POS EDGE TRIGGER WITH DATA ENABLE, CMOS-ADVANCED, 20	NAT. SEMICONDUCTOR	74AC377SC
IC35	28469/058	IC-DIGITAL BUFFER/LINE-DRIVER 74HC244... 4 INPUT, 4 BIT, DUAL, NON-INVERTING, TRI-STATE BUS,	PHILIPS	74HC244D
IC36	28466/120	IC-DIGITAL OR-GATE 74HC32... 2 INPUT, QUAD, CMOS-H/SPEED, 14 PIN, SMALL-OUTLINE.	PHILIPS	74HC32D
IC37	28462/638	IC-DIGITAL FLIP-FLOP/D-TYPE 74HC74... 2 BIT, DUAL, POS EDGE TRIGGER, PLUS SET & CLEAR, CMOS-H/SPEED,	PHILIPS	74HC74D
IC38	28465/067	IC-DIGITAL ENCODER 74HC148... 8 INPUT, 3 BIT, SINGLE, PRIORITY ENCODING, CMOS-H/SPEED, 16 PIN,	TEXAS INSTRUMENTS	SN74HC148D
IC39	28465/067	IC-DIGITAL ENCODER 74HC148... 8 INPUT, 3 BIT, SINGLE, PRIORITY ENCODING, CMOS-H/SPEED, 16 PIN,	TEXAS INSTRUMENTS	SN74HC148D
IC40	28462/157	IC-DIGITAL FLIP-FLOP/D-TYPE 74HC377... OCTAL, POS EDGE TRIGGER WITH DATA ENABLE, CMOS-H/SPEED, 20	PHILIPS	74HC377D
IC41	28467/132	IC-MICRO CONTROLLER, 82C51A... UNIVERSAL SYN/ASYN, RECEIVER/TRANSMITTR, 10MHz, CMOS, 28 PIN, PLCC.	NEC ELECTRONICS LTD	uPD71051L-10
IC42	28469/044	IC-DIGITAL BUFFER/LINE-DRIVER 1488... QUAD, UNBALANCED, INVERTING, TO RS-232D AND CCITT V.24,	NAT. SEMICONDUCTOR	DS1488M
IC43	28469/045	IC-DIGITAL RECEIVER 1489... 4 INPUT, 4 BIT, QUAD, RS 232 RECEIVER, MOS, 14 PIN, SMALL-OUTLINE.	NAT. SEMICONDUCTOR	DS1489M
IC44	28461/004	IC-ANALOGUE A/D CONVERTER ADC0809CCV... 8 BIT, 8 CHANNEL MULTIPLEXER, BUS-COMPATIBLE, TOTAL ERROR	NAT. SEMICONDUCTOR	ADC0809CCV
IC45	28466/241	IC-DIGITAL NOR-GATE 74HC02... 2 INPUT, QUAD, CMOS-H/SPEED, 14 PIN, SMALL-OUTLINE.	PHILIPS	74HC02D
IC46	28468/321	IC-DIGITAL FLIP-FLOP/MONOSTABLE 74HC123... DUAL, RETRIGGERABLE, tW = 0.45RC, WITH RESET,	PHILIPS	74HC123D
IC47	28462/639	IC-DIGITAL FLIP-FLOP/D-TYPE 74AC374... OCTAL, NON-INVERTING, POS EDGE TRIGGER, TRI-STATE,	NAT. SEMICONDUCTOR	74AC374SC
IC48	28461/413	IC-ANALOGUE OPERATIONAL AMP TL074... QUAD, JFET INPUT, LOW NOISE, SLEW RATE 8V/uS MIN, GAIN	MOTOROLA INC.	TL074CD
IC49	28461/939	IC-ANALOGUE RMS/DC CONVERTER AD536AJH... LINEAR, MONOLITHIC, 10 PIN, TO-100.	ANALOG DEVICES LTD	AD536AJH
IC50	28461/413	IC-ANALOGUE OPERATIONAL AMP TL074... QUAD, JFET INPUT, LOW NOISE, SLEW RATE 8V/uS MIN, GAIN	MOTOROLA INC.	TL074CD
IC51	28461/898	IC-ANALOGUE D/A-CONVERTER 7528... 8 INPUT, DUAL, 8-BIT, BUFFERED, MULTIPLYING, CMOS, 20 PIN,	ANALOG DEVICES LTD	AD7528JR

Cir. Ref.	MI part number	Description	Manufacturer	Manufacturer's part number
Microprocessor B2/1 (contd.)				
IC52 to IC54	28462/157	IC-DIGITAL FLIP-FLOP/D-TYPE 74HC377... OCTAL, POS EDGE TRIGGER WITH DATA ENABLE, CMOS-H/SPEED, 20	PHILIPS	74HC377D
IC55	44535/284	IC-PROGRAMMED FPGA, SET OF 1, 2945.		
IC56	28467/108	IC-MICRO DIGIT/SGNL PROCESSR, ADSP2105... 10MHz DIGITAL SIGNAL PROCESSING, 1K PROGRAM & 0.5K DATA	ANALOG DEVICES LTD	ADSP2105KP-40
IC57	44535/287	IC-PROGRAMMED PAL, SET OF 1, 2945, DSP DECODER.		
IC58	28462/431	IC-DIGITAL LATCH 74HCT373... OCTAL, TRANSPARENT WITH TRI-STATE BUS, CMOS-H/SPEED+TTL, 20 PIN,	PHILIPS	74HCT373D
IC59	28462/431	IC-DIGITAL LATCH 74HCT373... OCTAL, TRANSPARENT WITH TRI-STATE BUS, CMOS-H/SPEED+TTL, 20 PIN,	PHILIPS	74HCT373D
IC60 to IC62	28469/573	IC-DIGITAL LATCH 74ACT373... OCTAL, TRANSPARENT WITH TRI-STATE BUS, CMOS-ADVANCED+TTL, 20 PIN,	NAT. SEMICONDUCTOR	74ACT373SC
IC63	28467/118	IC-MICRO STATIC-RAM, 32K x 8 BIT, 62256... 100nS, 100uA STANDBY CURRENT, 0.45in PITCH, CMOS, 28 PIN,	TOSHIBA (UK) LTD	TC55257DFL-10
IC64	28467/118	IC-MICRO STATIC-RAM, 32K x 8 BIT, 62256... 100nS, 100uA STANDBY CURRENT, 0.45in PITCH, CMOS, 28 PIN,	TOSHIBA (UK) LTD	TC55257DFL-10
IC65	28462/151	IC-DIGITAL FLIP-FLOP/D-TYPE 74HC374... 1 INPUT, OCTAL, NON-INVERTING, POS EDGE TRIGGER, TRI-STATE,	PHILIPS	74HC374D
IC66	28461/818	IC-ANALOGUE A/D CONVERTER 7821... SINGLE, 5V 8 BIT, HALF-FLASH, ERROR +/-1/2 LSB, RD-CONVERSION	ANALOG DEVICES LTD	AD7821KR
IC67	28462/151	IC-DIGITAL FLIP-FLOP/D-TYPE 74HC374... 1 INPUT, OCTAL, NON-INVERTING, POS EDGE TRIGGER, TRI-STATE,	PHILIPS	74HC374D
IC68	44535/288	IC-PROGRAMMED PAL, SET OF 1, 2945, FRACTIONAL DECODER.		
IC69	28461/898	IC-ANALOGUE D/A-CONVERTER 7528... 8 INPUT, DUAL, 8-BIT, BUFFERED, MULTIPLYING, CMOS, 20 PIN,	ANALOG DEVICES LTD	AD7528JR
IC70	28462/157	IC-DIGITAL FLIP-FLOP/D-TYPE 74HC377... OCTAL, POS EDGE TRIGGER WITH DATA ENABLE, CMOS-H/SPEED, 20	PHILIPS	74HC377D
IC71	28461/029	IC-ANALOGUE SWITCH DG211... QUAD, 15V SPST, ON-RESISTANCE <175R, TTL COMPATIBLE, CMOS, 16 PIN,	ANALOG DEVICES LTD	ADG211AKR
IC72	28461/413	IC-ANALOGUE OPERATIONAL AMP TL074... QUAD, JFET INPUT, LOW NOISE, SLEW RATE 8V/uS MIN, GAIN	MOTOROLA INC.	TL074CD
IC73	28461/673	IC-ANALOGUE COMPARATOR LM339... QUAD, SINGLE SUPPLY, BIPOLAR, 14 PIN, SMALL-OUTLINE.	PHILIPS	LM339D
IC74	28461/411	IC-ANALOGUE OPERATIONAL AMP TL071... SINGLE, JFET INPUT, LOW NOISE, 8 PIN, SMALL-OUTLINE.	MOTOROLA INC.	TL071CD
IC75	28461/413	IC-ANALOGUE OPERATIONAL AMP TL074... QUAD, JFET INPUT, LOW NOISE, SLEW RATE 8V/uS MIN, GAIN	MOTOROLA INC.	TL074CD
IC76	28466/412	IC-DIGITAL EXCLUSIVE-OR 74HCT86... 2 INPUT, QUAD, CMOS-H/SPEED+TTL, 14 PIN, SMALL-OUTLINE.	PHILIPS	74HCT86D
IC77	28462/638	IC-DIGITAL FLIP-FLOP/D-TYPE 74HC74... 2 BIT, DUAL, POS EDGE TRIGGER, PLUS SET & CLEAR, CMOS-H/SPEED,	PHILIPS	74HC74D
IC78	28461/803	IC-ANALOGUE VOLTAGE-REFERENCE LT1019... 5V PRECISION, OUTPUT VOLTAGE DRIFT 20ppm/DEG.C MAX,	LINEAR TECHNOLOGY	LT1019CS8-5
IC79	28466/122	IC-DIGITAL OR-GATE 74ACT32... 2 INPUT, QUAD, CMOS-ADVANCED+TTL, 14 PIN, SMALL-OUTLINE.	NAT. SEMICONDUCTOR	74ACT32SC
IC80	28461/774	IC-ANALOGUE VOLTAGE-REGULATOR 78L05AC... 5V +/-5%, POSITIVE, LINEAR, BIPOLAR, 8 PIN, SMALL-OUTLINE.	NAT. SEMICONDUCTOR	LM78L05ACM
IC81	28461/807	IC-ANALOGUE VOLTAGE-REGULATOR TL7705BCP... 5V SUPPLY MONITOR, VOLTAGE SUPERVISOR, 8 PIN,	TEXAS INSTRUMENTS	TL7705BCP

Cir. Ref.	MI part number	Description	Manufacturer	Manufacturer's part number
Microprocessor B2/1 (contd.)				
IC82	28469/027	IC-DIGITAL INVERTER 74HCT14... HEX, SCHMITT-TRIGGER OPERATION, CMOS-H/SPEED+TTL, 14	PHILIPS	74HCT14D
IC83	28466/385	IC-DIGITAL NAND-GATE 74HCT00... 2 INPUT, QUAD, CMOS-H/SPEED+TTL, 14 PIN, SMALL-OUTLINE.	PHILIPS	74HCT00D
IC84	28469/058	IC-DIGITAL BUFFER/LINE-DRIVER 74HC244... 4 INPUT, 4 BIT, DUAL, NON-INVERTING, TRI-STATE BUS,	PHILIPS	74HC244D
L1	23642/533	INDUCTOR-FIXED 10uH +/- 5% EPOXY-MOULD, 150mA 2R1 MAX, 30 Q @ 2.52 MHz, 36 MHz SRF, SURFACE MOUNTED,	MEGGITT ELECTRONICS	3612-T-100-J
L2	23642/535	INDUCTOR-FIXED 1uH +/- 5% EPOXY-MOULD, 400mA 0R7 MAX, 30 Q @ 7.96 MHz, 120 MHz SRF, SURFACE	MEGGITT ELECTRONICS	3612-T-1R0-J
L3	23642/533	INDUCTOR-FIXED 10uH +/- 5% EPOXY-MOULD, 150mA 2R1 MAX, 30 Q @ 2.52 MHz, 36 MHz SRF, SURFACE MOUNTED,	MEGGITT ELECTRONICS	3612-T-100-J
L4	23642/064	INDUCTOR-FIXED 1mH +/- 10% UNSCREENED, AIR-CORED, 510mA 1R176 MAX, 20 Q @ 0.796 MHz, 13mm HIGH MAX,	TOKO (UK) LTD	494HYF0140K
PLR	23436/764	CONNECTOR MULTIWAY, PCB HEADER, 2 WAY, STRAIGHT, 2mm PITCH, NYLON BODY, LIGHT BROWN.	JAE ELECTRONICS	IL-S-2P-S2T2-EF
PLS	23435/112	CONNECTOR MULTIWAY, PCB HEADER, 36 WAY, RIGHT ANGLED, 2.54mm PITCH, PINS GOLD PLATED TO CLASS 2,	BERG ELECTRONICS	75168-107-36
R1	24811/203	RESISTOR-FIXED METAL-FILM 18K2 +/- 1% 250mW 200V 50 ppm/DEG.C, SURFACE MOUNTED, SIZE MINI-MELF,	VISHAY COMPONENTS	SMM0204-18K2-1%50ppm
R2	24811/193	RESISTOR-FIXED METAL-FILM 6K81 +/- 1% 250mW 200V 50 ppm/DEG.C, SURFACE MOUNTED, SIZE MINI-MELF,	VISHAY COMPONENTS	SMM0204-6K81-1%50ppm
R3	24811/137	RESISTOR-FIXED METAL-FILM 33R2 +/- 1% 250mW 200V 50 ppm/DEG.C, SURFACE MOUNTED, SIZE MINI-MELF,	VISHAY COMPONENTS	SMM0204-33R2-1%50ppm
R4	24811/161	RESISTOR-FIXED METAL-FILM 332R +/- 1% 250mW 200V 50 ppm/DEG.C, SURFACE MOUNTED, SIZE MINI-MELF,	VISHAY COMPONENTS	SMM0204-332R-1%50ppm
R6	24811/140	RESISTOR-FIXED METAL-FILM 43R2 +/- 1% 250mW 200V 50 ppm/DEG.C, SURFACE MOUNTED, SIZE MINI-MELF,	VISHAY COMPONENTS	SMM0204-43R2-1%50ppm
R7	24811/173	RESISTOR-FIXED METAL-FILM 1K +/- 1% 250mW 200V 50 ppm/DEG.C, SURFACE MOUNTED, SIZE MINI-MELF, (8mm	VISHAY COMPONENTS	SMM0204-1K0-1%-50ppm
R8	24811/217	RESISTOR-FIXED METAL-FILM 68K1 +/- 1% 250mW 200V 50 ppm/DEG.C, SURFACE MOUNTED, SIZE MINI-MELF,	VISHAY COMPONENTS	SMM0204-68K1-1%50ppm
R9	24811/215	RESISTOR-FIXED METAL-FILM 56K2 +/- 1% 250mW 200V 50 ppm/DEG.C, SURFACE MOUNTED, SIZE MINI-MELF,	VISHAY COMPONENTS	SMM0204-56K2-1%50ppm
R10	24811/209	RESISTOR-FIXED METAL-FILM 33K2 +/- 1% 250mW 200V 50 ppm/DEG.C, SURFACE MOUNTED, SIZE MINI-MELF,	VISHAY COMPONENTS	SMM0204-33K2-1%50ppm
R11	24811/233	RESISTOR-FIXED METAL-FILM 332K +/- 1% 250mW 200V 50 ppm/DEG.C, SURFACE MOUNTED, SIZE MINI-MELF,	VISHAY COMPONENTS	SMM0204-332K-1%50ppm
R12	24811/231	RESISTOR-FIXED METAL-FILM 274K +/- 1% 250mW 200V 50 ppm/DEG.C, SURFACE MOUNTED, SIZE MINI-MELF,	VISHAY COMPONENTS	SMM0204-274K-1%50ppm
R13	24811/241	RESISTOR-FIXED METAL-FILM 681K +/- 1% 250mW 200V 50 ppm/DEG.C, SURFACE MOUNTED, SIZE MINI-MELF,	VISHAY COMPONENTS	SMM0204-681K-1%50ppm
R14	24811/174	RESISTOR-FIXED METAL-FILM 1K1 +/- 1% 250mW 200V 50 ppm/DEG.C, SURFACE MOUNTED, SIZE MINI-MELF, (8mm	VISHAY COMPONENTS	SMM0204-1K1-1%50ppm

Cir. Ref.	MI part number	Description	Manufacturer	Manufacturer's part number
Microprocessor B2/1 (contd.)				
R15	24811/174	RESISTOR-FIXED METAL-FILM 1K1 +/- 1% 250mW 200V 50 ppm/DEG.C, SURFACE MOUNTED, SIZE MINI-MELF, (8mm	VISHAY COMPONENTS	SMM0204-1K1-1%50ppm
R16	24811/197	RESISTOR-FIXED METAL-FILM 10K +/- 1% 250mW 200V 50 ppm/DEG.C, SURFACE MOUNTED, SIZE MINI-MELF, (8mm	VISHAY COMPONENTS	SMM0204-10K-1%50ppm
R17	24811/173	RESISTOR-FIXED METAL-FILM 1K +/- 1% 250mW 200V 50 ppm/DEG.C, SURFACE MOUNTED, SIZE MINI-MELF, (8mm	VISHAY COMPONENTS	SMM0204-1K0-1%-50ppm
R18	24811/209	RESISTOR-FIXED METAL-FILM 33K2 +/- 1% 250mW 200V 50 ppm/DEG.C, SURFACE MOUNTED, SIZE MINI-MELF,	VISHAY COMPONENTS	SMM0204-33K2-1%50ppm
R19	24811/149	RESISTOR-FIXED METAL-FILM 100R +/- 1% 250mW 200V 50 ppm/DEG.C, SURFACE MOUNTED, SIZE MINI-MELF,	VISHAY COMPONENTS	SMM0204-100R-1%50ppm
R20	24811/197	RESISTOR-FIXED METAL-FILM 10K +/- 1% 250mW 200V 50 ppm/DEG.C, SURFACE MOUNTED, SIZE MINI-MELF, (8mm	VISHAY COMPONENTS	SMM0204-10K-1%50ppm
R21	24811/169	RESISTOR-FIXED METAL-FILM 681R +/- 1% 250mW 200V 50 ppm/DEG.C, SURFACE MOUNTED, SIZE MINI-MELF,	VISHAY COMPONENTS	SMM0204-681R-1%50ppm
R22	24811/140	RESISTOR-FIXED METAL-FILM 43R2 +/- 1% 250mW 200V 50 ppm/DEG.C, SURFACE MOUNTED, SIZE MINI-MELF,	VISHAY COMPONENTS	SMM0204-43R2-1%50ppm
R23	24811/172	RESISTOR-FIXED METAL-FILM 909R +/- 1% 250mW 200V 50 ppm/DEG.C, SURFACE MOUNTED, SIZE MINI-MELF,	VISHAY COMPONENTS	SMM0204-909R-1%50ppm
R24	24811/140	RESISTOR-FIXED METAL-FILM 43R2 +/- 1% 250mW 200V 50 ppm/DEG.C, SURFACE MOUNTED, SIZE MINI-MELF,	VISHAY COMPONENTS	SMM0204-43R2-1%50ppm
R25	24811/173	RESISTOR-FIXED METAL-FILM 1K +/- 1% 250mW 200V 50 ppm/DEG.C, SURFACE MOUNTED, SIZE MINI-MELF, (8mm	VISHAY COMPONENTS	SMM0204-1K0-1%-50ppm
R26	24811/173	RESISTOR-FIXED METAL-FILM 1K +/- 1% 250mW 200V 50 ppm/DEG.C, SURFACE MOUNTED, SIZE MINI-MELF, (8mm	VISHAY COMPONENTS	SMM0204-1K0-1%-50ppm
R27	24811/169	RESISTOR-FIXED METAL-FILM 681R +/- 1% 250mW 200V 50 ppm/DEG.C, SURFACE MOUNTED, SIZE MINI-MELF,	VISHAY COMPONENTS	SMM0204-681R-1%50ppm
R28 to R34	24811/157	RESISTOR-FIXED METAL-FILM 221R +/- 1% 250mW 200V 50 ppm/DEG.C, SURFACE MOUNTED, SIZE MINI-MELF,	VISHAY COMPONENTS	SMM0204-221R-1%50ppm
R35	24811/149	RESISTOR-FIXED METAL-FILM 100R +/- 1% 250mW 200V 50 ppm/DEG.C, SURFACE MOUNTED, SIZE MINI-MELF,	VISHAY COMPONENTS	SMM0204-100R-1%50ppm
R36 to R40	24811/197	RESISTOR-FIXED METAL-FILM 10K +/- 1% 250mW 200V 50 ppm/DEG.C, SURFACE MOUNTED, SIZE MINI-MELF, (8mm	VISHAY COMPONENTS	SMM0204-10K-1%50ppm
R41	24811/140	RESISTOR-FIXED METAL-FILM 43R2 +/- 1% 250mW 200V 50 ppm/DEG.C, SURFACE MOUNTED, SIZE MINI-MELF,	VISHAY COMPONENTS	SMM0204-43R2-1%50ppm
R42	24811/169	RESISTOR-FIXED METAL-FILM 681R +/- 1% 250mW 200V 50 ppm/DEG.C, SURFACE MOUNTED, SIZE MINI-MELF,	VISHAY COMPONENTS	SMM0204-681R-1%50ppm
R43	24811/149	RESISTOR-FIXED METAL-FILM 100R +/- 1% 250mW 200V 50 ppm/DEG.C, SURFACE MOUNTED, SIZE MINI-MELF,	VISHAY COMPONENTS	SMM0204-100R-1%50ppm
R44	24811/625	RESISTOR-FIXED METAL-FILM 14K7 +/- 0.1% 250mW 200V 15 ppm/DEG.C, SURFACE MOUNTED, SIZE MINI-MELF,	VISHAY COMPONENTS	SMM0204-14K7-0.1%-15
R45	24811/640	RESISTOR-FIXED METAL-FILM 1K54 +/- 0.1% 250mW 200V 15 ppm/DEG.C, SURFACE MOUNTED, SIZE MINI-MELF,	VISHAY COMPONENTS	SMM0204-1K54-0.1%-15
R46	24811/237	RESISTOR-FIXED METAL-FILM 475K +/- 1% 250mW 200V 50 ppm/DEG.C, SURFACE MOUNTED, SIZE MINI-MELF,	VISHAY COMPONENTS	SMM0204-475K-1%50ppm
R47	24811/197	RESISTOR-FIXED METAL-FILM 10K +/- 1% 250mW 200V 50 ppm/DEG.C, SURFACE MOUNTED, SIZE MINI-MELF, (8mm	VISHAY COMPONENTS	SMM0204-10K-1%50ppm
R48	24811/140	RESISTOR-FIXED METAL-FILM 43R2 +/- 1% 250mW 200V 50 ppm/DEG.C, SURFACE MOUNTED, SIZE MINI-MELF,	VISHAY COMPONENTS	SMM0204-43R2-1%50ppm
R49	24811/133	RESISTOR-FIXED METAL-FILM 22R1 +/- 1% 250mW 200V 50 ppm/DEG.C, SURFACE MOUNTED, SIZE MINI-MELF,	VISHAY COMPONENTS	SMM0204-22R1-1%50ppm
R50	24811/133	RESISTOR-FIXED METAL-FILM 22R1 +/- 1% 250mW 200V 50 ppm/DEG.C, SURFACE MOUNTED, SIZE MINI-MELF,	VISHAY COMPONENTS	SMM0204-22R1-1%50ppm

Cir. Ref.	MI part number	Description	Manufacturer	Manufacturer's part number
Microprocessor B2/1 (contd.)				
R51	24811/205	RESISTOR-FIXED METAL-FILM 22K1 +/- 1% 250mW 200V 50 ppm/DEG.C, SURFACE MOUNTED, SIZE MINI-MELF,	VISHAY COMPONENTS	SMM0204-22K1-1%50ppm
R52	24811/192	RESISTOR-FIXED METAL-FILM 6K19 +/- 1% 250mW 200V 50 ppm/DEG.C, SURFACE MOUNTED, SIZE MINI-MELF,	VISHAY COMPONENTS	SMM0204-6K19-1%50ppm
R53	24811/217	RESISTOR-FIXED METAL-FILM 68K1 +/- 1% 250mW 200V 50 ppm/DEG.C, SURFACE MOUNTED, SIZE MINI-MELF,	VISHAY COMPONENTS	SMM0204-68K1-1%50ppm
R54	24811/217	RESISTOR-FIXED METAL-FILM 68K1 +/- 1% 250mW 200V 50 ppm/DEG.C, SURFACE MOUNTED, SIZE MINI-MELF,	VISHAY COMPONENTS	SMM0204-68K1-1%50ppm
R55	24811/142	RESISTOR-FIXED METAL-FILM 51R1 +/- 1% 250mW 200V 50 ppm/DEG.C, SURFACE MOUNTED, SIZE MINI-MELF,	VISHAY COMPONENTS	SMM0204-51R1-1%50ppm
R56	24811/197	RESISTOR-FIXED METAL-FILM 10K +/- 1% 250mW 200V 50 ppm/DEG.C, SURFACE MOUNTED, SIZE MINI-MELF, (8mm	VISHAY COMPONENTS	SMM0204-10K-1%50ppm
R57	24811/237	RESISTOR-FIXED METAL-FILM 475K +/- 1% 250mW 200V 50 ppm/DEG.C, SURFACE MOUNTED, SIZE MINI-MELF,	VISHAY COMPONENTS	SMM0204-475K-1%50ppm
R58	24811/217	RESISTOR-FIXED METAL-FILM 68K1 +/- 1% 250mW 200V 50 ppm/DEG.C, SURFACE MOUNTED, SIZE MINI-MELF,	VISHAY COMPONENTS	SMM0204-68K1-1%50ppm
R59	24811/217	RESISTOR-FIXED METAL-FILM 68K1 +/- 1% 250mW 200V 50 ppm/DEG.C, SURFACE MOUNTED, SIZE MINI-MELF,	VISHAY COMPONENTS	SMM0204-68K1-1%50ppm
R60	24811/142	RESISTOR-FIXED METAL-FILM 51R1 +/- 1% 250mW 200V 50 ppm/DEG.C, SURFACE MOUNTED, SIZE MINI-MELF,	VISHAY COMPONENTS	SMM0204-51R1-1%50ppm
R61	24811/215	RESISTOR-FIXED METAL-FILM 56K2 +/- 1% 250mW 200V 50 ppm/DEG.C, SURFACE MOUNTED, SIZE MINI-MELF,	VISHAY COMPONENTS	SMM0204-56K2-1%50ppm
R62	24811/197	RESISTOR-FIXED METAL-FILM 10K +/- 1% 250mW 200V 50 ppm/DEG.C, SURFACE MOUNTED, SIZE MINI-MELF, (8mm	VISHAY COMPONENTS	SMM0204-10K-1%50ppm
R63	24811/197	RESISTOR-FIXED METAL-FILM 10K +/- 1% 250mW 200V 50 ppm/DEG.C, SURFACE MOUNTED, SIZE MINI-MELF, (8mm	VISHAY COMPONENTS	SMM0204-10K-1%50ppm
R64	24811/142	RESISTOR-FIXED METAL-FILM 51R1 +/- 1% 250mW 200V 50 ppm/DEG.C, SURFACE MOUNTED, SIZE MINI-MELF,	VISHAY COMPONENTS	SMM0204-51R1-1%50ppm
R65	24811/169	RESISTOR-FIXED METAL-FILM 681R +/- 1% 250mW 200V 50 ppm/DEG.C, SURFACE MOUNTED, SIZE MINI-MELF,	VISHAY COMPONENTS	SMM0204-681R-1%50ppm
R66	24811/140	RESISTOR-FIXED METAL-FILM 43R2 +/- 1% 250mW 200V 50 ppm/DEG.C, SURFACE MOUNTED, SIZE MINI-MELF,	VISHAY COMPONENTS	SMM0204-43R2-1%50ppm
R67 to R70	24811/197	RESISTOR-FIXED METAL-FILM 10K +/- 1% 250mW 200V 50 ppm/DEG.C, SURFACE MOUNTED, SIZE MINI-MELF, (8mm	VISHAY COMPONENTS	SMM0204-10K-1%50ppm
R71	24811/144	RESISTOR-FIXED METAL-FILM 61R9 +/- 1% 250mW 200V 50 ppm/DEG.C, SURFACE MOUNTED, SIZE MINI-MELF,	VISHAY COMPONENTS	SMM0204-61R9-1%50ppm
R72	24811/144	RESISTOR-FIXED METAL-FILM 61R9 +/- 1% 250mW 200V 50 ppm/DEG.C, SURFACE MOUNTED, SIZE MINI-MELF,	VISHAY COMPONENTS	SMM0204-61R9-1%50ppm
R73 to R78	24811/173	RESISTOR-FIXED METAL-FILM 1K +/- 1% 250mW 200V 50 ppm/DEG.C, SURFACE MOUNTED, SIZE MINI-MELF, (8mm	VISHAY COMPONENTS	SMM0204-1K0-1%-50ppm
R79	24811/165	RESISTOR-FIXED METAL-FILM 475R +/- 1% 250mW 200V 50 ppm/DEG.C, SURFACE MOUNTED, SIZE MINI-MELF,	VISHAY COMPONENTS	SMM0204-475R-1%50ppm
R80 to R82	24811/197	RESISTOR-FIXED METAL-FILM 10K +/- 1% 250mW 200V 50 ppm/DEG.C, SURFACE MOUNTED, SIZE MINI-MELF, (8mm	VISHAY COMPONENTS	SMM0204-10K-1%50ppm
R83	24811/237	RESISTOR-FIXED METAL-FILM 475K +/- 1% 250mW 200V 50 ppm/DEG.C, SURFACE MOUNTED, SIZE MINI-MELF,	VISHAY COMPONENTS	SMM0204-475K-1%50ppm
R84	24811/197	RESISTOR-FIXED METAL-FILM 10K +/- 1% 250mW 200V 50 ppm/DEG.C, SURFACE MOUNTED, SIZE MINI-MELF, (8mm	VISHAY COMPONENTS	SMM0204-10K-1%50ppm
R85	24811/221	RESISTOR-FIXED METAL-FILM 100K +/- 1% 250mW 200V 50 ppm/DEG.C, SURFACE MOUNTED, SIZE MINI-MELF,	VISHAY COMPONENTS	SMM0204-100K-1%50ppm
R86	24811/197	RESISTOR-FIXED METAL-FILM 10K +/- 1% 250mW 200V 50 ppm/DEG.C, SURFACE MOUNTED, SIZE MINI-MELF, (8mm	VISHAY COMPONENTS	SMM0204-10K-1%50ppm

Cir. Ref.	MI part number	Description	Manufacturer	Manufacturer's part number
Microprocessor B2/1 (contd.)				
R87	24811/221	RESISTOR-FIXED METAL-FILM 100K +/- 1% 250mW 200V 50 ppm/DEG.C, SURFACE MOUNTED, SIZE MINI-MELF,	VISHAY COMPONENTS	SMM0204-100K-1%50ppm
R88	24811/221	RESISTOR-FIXED METAL-FILM 100K +/- 1% 250mW 200V 50 ppm/DEG.C, SURFACE MOUNTED, SIZE MINI-MELF,	VISHAY COMPONENTS	SMM0204-100K-1%50ppm
R89	24811/229	RESISTOR-FIXED METAL-FILM 221K +/- 1% 250mW 200V 50 ppm/DEG.C, SURFACE MOUNTED, SIZE MINI-MELF,	VISHAY COMPONENTS	SMM0204-221K-1%50ppm
R90	24811/245	RESISTOR-FIXED METAL-FILM 1M +/- 1% 250mW 200V 50 ppm/DEG.C, SURFACE MOUNTED, SIZE MINI-MELF, (8mm	VISHAY COMPONENTS	SMM0204-1M0-1%50ppm
R91	24811/245	RESISTOR-FIXED METAL-FILM 1M +/- 1% 250mW 200V 50 ppm/DEG.C, SURFACE MOUNTED, SIZE MINI-MELF, (8mm	VISHAY COMPONENTS	SMM0204-1M0-1%50ppm
R92	24811/221	RESISTOR-FIXED METAL-FILM 100K +/- 1% 250mW 200V 50 ppm/DEG.C, SURFACE MOUNTED, SIZE MINI-MELF,	VISHAY COMPONENTS	SMM0204-100K-1%50ppm
R93	24811/189	RESISTOR-FIXED METAL-FILM 4K75 +/- 1% 250mW 200V 50 ppm/DEG.C, SURFACE MOUNTED, SIZE MINI-MELF,	VISHAY COMPONENTS	SMM0204-4K75-1%50ppm
R94 to R98	24811/197	RESISTOR-FIXED METAL-FILM 10K +/- 1% 250mW 200V 50 ppm/DEG.C, SURFACE MOUNTED, SIZE MINI-MELF, (8mm	VISHAY COMPONENTS	SMM0204-10K-1%50ppm
R99	24811/229	RESISTOR-FIXED METAL-FILM 221K +/- 1% 250mW 200V 50 ppm/DEG.C, SURFACE MOUNTED, SIZE MINI-MELF,	VISHAY COMPONENTS	SMM0204-221K-1%50ppm
R100	24811/197	RESISTOR-FIXED METAL-FILM 10K +/- 1% 250mW 200V 50 ppm/DEG.C, SURFACE MOUNTED, SIZE MINI-MELF, (8mm	VISHAY COMPONENTS	SMM0204-10K-1%50ppm
R101	24811/193	RESISTOR-FIXED METAL-FILM 6K81 +/- 1% 250mW 200V 50 ppm/DEG.C, SURFACE MOUNTED, SIZE MINI-MELF,	VISHAY COMPONENTS	SMM0204-6K81-1%50ppm
R102	24811/193	RESISTOR-FIXED METAL-FILM 6K81 +/- 1% 250mW 200V 50 ppm/DEG.C, SURFACE MOUNTED, SIZE MINI-MELF,	VISHAY COMPONENTS	SMM0204-6K81-1%50ppm
R103	24811/237	RESISTOR-FIXED METAL-FILM 475K +/- 1% 250mW 200V 50 ppm/DEG.C, SURFACE MOUNTED, SIZE MINI-MELF,	VISHAY COMPONENTS	SMM0204-475K-1%50ppm
R104	24811/237	RESISTOR-FIXED METAL-FILM 475K +/- 1% 250mW 200V 50 ppm/DEG.C, SURFACE MOUNTED, SIZE MINI-MELF,	VISHAY COMPONENTS	SMM0204-475K-1%50ppm
R105	24811/261	RESISTOR-FIXED METAL-FILM 4M75 +/- 1% 250mW 200V 50 ppm/DEG.C, SURFACE MOUNTED, SIZE MINI-MELF,	WELWYN ELECTRONICS	WRM0204-C-4M75-F-P2
R106	24811/197	RESISTOR-FIXED METAL-FILM 10K +/- 1% 250mW 200V 50 ppm/DEG.C, SURFACE MOUNTED, SIZE MINI-MELF, (8mm	VISHAY COMPONENTS	SMM0204-10K-1%50ppm
R107	24811/189	RESISTOR-FIXED METAL-FILM 4K75 +/- 1% 250mW 200V 50 ppm/DEG.C, SURFACE MOUNTED, SIZE MINI-MELF,	VISHAY COMPONENTS	SMM0204-4K75-1%50ppm
R108	24811/189	RESISTOR-FIXED METAL-FILM 4K75 +/- 1% 250mW 200V 50 ppm/DEG.C, SURFACE MOUNTED, SIZE MINI-MELF,	VISHAY COMPONENTS	SMM0204-4K75-1%50ppm
R109	24811/173	RESISTOR-FIXED METAL-FILM 1K +/- 1% 250mW 200V 50 ppm/DEG.C, SURFACE MOUNTED, SIZE MINI-MELF, (8mm	VISHAY COMPONENTS	SMM0204-1K0-1%-50ppm
R110 to R112	24811/197	RESISTOR-FIXED METAL-FILM 10K +/- 1% 250mW 200V 50 ppm/DEG.C, SURFACE MOUNTED, SIZE MINI-MELF, (8mm	VISHAY COMPONENTS	SMM0204-10K-1%50ppm
R113	24811/161	RESISTOR-FIXED METAL-FILM 332R +/- 1% 250mW 200V 50 ppm/DEG.C, SURFACE MOUNTED, SIZE MINI-MELF,	VISHAY COMPONENTS	SMM0204-332R-1%50ppm
R114	24811/209	RESISTOR-FIXED METAL-FILM 33K2 +/- 1% 250mW 200V 50 ppm/DEG.C, SURFACE MOUNTED, SIZE MINI-MELF,	VISHAY COMPONENTS	SMM0204-33K2-1%50ppm
R115	24811/197	RESISTOR-FIXED METAL-FILM 10K +/- 1% 250mW 200V 50 ppm/DEG.C, SURFACE MOUNTED, SIZE MINI-MELF, (8mm	VISHAY COMPONENTS	SMM0204-10K-1%50ppm
R116	24811/221	RESISTOR-FIXED METAL-FILM 100K +/- 1% 250mW 200V 50 ppm/DEG.C, SURFACE MOUNTED, SIZE MINI-MELF,	VISHAY COMPONENTS	SMM0204-100K-1%50ppm
R117	24811/201	RESISTOR-FIXED METAL-FILM 15K +/- 1% 250mW 200V 50 ppm/DEG.C, SURFACE MOUNTED, SIZE MINI-MELF, (8mm	VISHAY COMPONENTS	SMM0204-15K-1%50ppm
R118	25685/408	THERMISTOR NEGATIVE-TC DISC, 5mm 15K @ 25 DEG.C, 4.7 %/DEG.C +/- 10% 500mW 2.54mm PWP, RADIAL.	PHILIPS	2322-640-63153

Cir. Ref.	MI part number	Description	Manufacturer	Manufacturer's part number
Microprocessor B2/1 (contd.)				
R119 to R121	24811/197	RESISTOR-FIXED METAL-FILM 10K +/- 1% 250mW 200V 50 ppm/DEG.C, SURFACE MOUNTED, SIZE MINI-MELF, (8mm	VISHAY COMPONENTS	SMM0204-10K-1%50ppm
R122	24811/169	RESISTOR-FIXED METAL-FILM 681R +/- 1% 250mW 200V 50 ppm/DEG.C, SURFACE MOUNTED, SIZE MINI-MELF,	VISHAY COMPONENTS	SMM0204-681R-1%50ppm
R123 to R125	24811/197	RESISTOR-FIXED METAL-FILM 10K +/- 1% 250mW 200V 50 ppm/DEG.C, SURFACE MOUNTED, SIZE MINI-MELF, (8mm	VISHAY COMPONENTS	SMM0204-10K-1%50ppm
R126	24338/002	RESISTOR-FIXED METAL-GLAZE 100R +/- 5% 1W 100V 350 ppm/DEG.C, SURFACE MOUNTED, SIZE 2512, (12mm	VISHAY COMPONENTS	CR2512-100R-5%-P4
R127	24338/004	RESISTOR-FIXED METAL-GLAZE 150R +/- 5% 1W 100V 350 ppm/DEG.C, SURFACE MOUNTED, SIZE 2512, (12mm	VISHAY COMPONENTS	CR2512-150R-5%-P4
R128	24338/004	RESISTOR-FIXED METAL-GLAZE 150R +/- 5% 1W 100V 350 ppm/DEG.C, SURFACE MOUNTED, SIZE 2512, (12mm	VISHAY COMPONENTS	CR2512-150R-5%-P4
R129	24811/137	RESISTOR-FIXED METAL-FILM 33R2 +/- 1% 250mW 200V 50 ppm/DEG.C, SURFACE MOUNTED, SIZE MINI-MELF,	VISHAY COMPONENTS	SMM0204-33R2-1%50ppm
R130	24811/245	RESISTOR-FIXED METAL-FILM 1M +/- 1% 250mW 200V 50 ppm/DEG.C, SURFACE MOUNTED, SIZE MINI-MELF, (8mm	VISHAY COMPONENTS	SMM0204-1M0-1%50ppm
R131	24811/245	RESISTOR-FIXED METAL-FILM 1M +/- 1% 250mW 200V 50 ppm/DEG.C, SURFACE MOUNTED, SIZE MINI-MELF, (8mm	VISHAY COMPONENTS	SMM0204-1M0-1%50ppm
R132	24811/185	RESISTOR-FIXED METAL-FILM 3K32 +/- 1% 250mW 200V 50 ppm/DEG.C, SURFACE MOUNTED, SIZE MINI-MELF,	VISHAY COMPONENTS	SMM0204-3K32-1%50ppm
R133	24811/173	RESISTOR-FIXED METAL-FILM 1K +/- 1% 250mW 200V 50 ppm/DEG.C, SURFACE MOUNTED, SIZE MINI-MELF, (8mm	VISHAY COMPONENTS	SMM0204-1K0-1%-50ppm
R134 to R136	24811/197	RESISTOR-FIXED METAL-FILM 10K +/- 1% 250mW 200V 50 ppm/DEG.C, SURFACE MOUNTED, SIZE MINI-MELF, (8mm	VISHAY COMPONENTS	SMM0204-10K-1%50ppm
R137	24811/194	RESISTOR-FIXED METAL-FILM 7K5 +/- 1% 250mW 200V 50 ppm/DEG.C, SURFACE MOUNTED, SIZE MINI-MELF, (8mm	VISHAY COMPONENTS	SMM0204-7K5-1%50ppm
R138 to R147	24811/197	RESISTOR-FIXED METAL-FILM 10K +/- 1% 250mW 200V 50 ppm/DEG.C, SURFACE MOUNTED, SIZE MINI-MELF, (8mm	VISHAY COMPONENTS	SMM0204-10K-1%50ppm
R148	24811/173	RESISTOR-FIXED METAL-FILM 1K +/- 1% 250mW 200V 50 ppm/DEG.C, SURFACE MOUNTED, SIZE MINI-MELF, (8mm	VISHAY COMPONENTS	SMM0204-1K0-1%-50ppm
R149 to R161	24811/197	RESISTOR-FIXED METAL-FILM 10K +/- 1% 250mW 200V 50 ppm/DEG.C, SURFACE MOUNTED, SIZE MINI-MELF, (8mm	VISHAY COMPONENTS	SMM0204-10K-1%50ppm
R162	24811/173	RESISTOR-FIXED METAL-FILM 1K +/- 1% 250mW 200V 50 ppm/DEG.C, SURFACE MOUNTED, SIZE MINI-MELF, (8mm	VISHAY COMPONENTS	SMM0204-1K0-1%-50ppm
R163 to R188	24811/197	RESISTOR-FIXED METAL-FILM 10K +/- 1% 250mW 200V 50 ppm/DEG.C, SURFACE MOUNTED, SIZE MINI-MELF, (8mm	VISHAY COMPONENTS	SMM0204-10K-1%50ppm
R189 to R194	24811/189	RESISTOR-FIXED METAL-FILM 4K75 +/- 1% 250mW 200V 50 ppm/DEG.C, SURFACE MOUNTED, SIZE MINI-MELF,	VISHAY COMPONENTS	SMM0204-4K75-1%50ppm
R195	24811/197	RESISTOR-FIXED METAL-FILM 10K +/- 1% 250mW 200V 50 ppm/DEG.C, SURFACE MOUNTED, SIZE MINI-MELF, (8mm	VISHAY COMPONENTS	SMM0204-10K-1%50ppm
R198	24811/197	RESISTOR-FIXED METAL-FILM 10K +/- 1% 250mW 200V 50 ppm/DEG.C, SURFACE MOUNTED, SIZE MINI-MELF, (8mm	VISHAY COMPONENTS	SMM0204-10K-1%50ppm
R199	24811/189	RESISTOR-FIXED METAL-FILM 4K75 +/- 1% 250mW 200V 50 ppm/DEG.C, SURFACE MOUNTED, SIZE MINI-MELF,	VISHAY COMPONENTS	SMM0204-4K75-1%50ppm
R200 to R215	24811/201	RESISTOR-FIXED METAL-FILM 15K +/- 1% 250mW 200V 50 ppm/DEG.C, SURFACE MOUNTED, SIZE MINI-MELF, (8mm	VISHAY COMPONENTS	SMM0204-15K-1%50ppm
R216	24811/174	RESISTOR-FIXED METAL-FILM 1K1 +/- 1% 250mW 200V 50 ppm/DEG.C, SURFACE MOUNTED, SIZE MINI-MELF, (8mm	VISHAY COMPONENTS	SMM0204-1K1-1%50ppm
R217	24811/185	RESISTOR-FIXED METAL-FILM 3K32 +/- 1% 250mW 200V 50 ppm/DEG.C, SURFACE MOUNTED, SIZE MINI-MELF,	VISHAY COMPONENTS	SMM0204-3K32-1%50ppm
R218	24811/152	RESISTOR-FIXED METAL-FILM 130R +/- 1% 250mW 200V 50 ppm/DEG.C, SURFACE MOUNTED, SIZE MINI-MELF,	VISHAY COMPONENTS	SMM0204-130R-1%50ppm

Cir. Ref.	MI part number	Description	Manufacturer	Manufacturer's part number
Microprocessor B2/1 (contd.)				
R219	24811/185	RESISTOR-FIXED METAL-FILM 3K32 +/- 1% 250mW 200V 50 ppm/DEG.C, SURFACE MOUNTED, SIZE MINI-MELF,	VISHAY COMPONENTS	SMM0204-3K32-1%50ppm
R220	24811/152	RESISTOR-FIXED METAL-FILM 130R +/- 1% 250mW 200V 50 ppm/DEG.C, SURFACE MOUNTED, SIZE MINI-MELF,	VISHAY COMPONENTS	SMM0204-130R-1%50ppm
R221	24811/174	RESISTOR-FIXED METAL-FILM 1K1 +/- 1% 250mW 200V 50 ppm/DEG.C, SURFACE MOUNTED, SIZE MINI-MELF, (8mm	VISHAY COMPONENTS	SMM0204-1K1-1%50ppm
R222	24811/189	RESISTOR-FIXED METAL-FILM 4K75 +/- 1% 250mW 200V 50 ppm/DEG.C, SURFACE MOUNTED, SIZE MINI-MELF,	VISHAY COMPONENTS	SMM0204-4K75-1%50ppm
R223	24811/133	RESISTOR-FIXED METAL-FILM 22R1 +/- 1% 250mW 200V 50 ppm/DEG.C, SURFACE MOUNTED, SIZE MINI-MELF,	VISHAY COMPONENTS	SMM0204-22R1-1%50ppm
R224	24811/197	RESISTOR-FIXED METAL-FILM 10K +/- 1% 250mW 200V 50 ppm/DEG.C, SURFACE MOUNTED, SIZE MINI-MELF, (8mm	VISHAY COMPONENTS	SMM0204-10K-1%50ppm
R225	24811/197	RESISTOR-FIXED METAL-FILM 10K +/- 1% 250mW 200V 50 ppm/DEG.C, SURFACE MOUNTED, SIZE MINI-MELF, (8mm	VISHAY COMPONENTS	SMM0204-10K-1%50ppm
R226 to R228	24811/173	RESISTOR-FIXED METAL-FILM 1K +/- 1% 250mW 200V 50 ppm/DEG.C, SURFACE MOUNTED, SIZE MINI-MELF, (8mm	VISHAY COMPONENTS	SMM0204-1K0-1%-50ppm
R229	24811/185	RESISTOR-FIXED METAL-FILM 3K32 +/- 1% 250mW 200V 50 ppm/DEG.C, SURFACE MOUNTED, SIZE MINI-MELF,	VISHAY COMPONENTS	SMM0204-3K32-1%50ppm
R230 to R233	24811/189	RESISTOR-FIXED METAL-FILM 4K75 +/- 1% 250mW 200V 50 ppm/DEG.C, SURFACE MOUNTED, SIZE MINI-MELF,	VISHAY COMPONENTS	SMM0204-4K75-1%50ppm
R234	24811/206	RESISTOR-FIXED METAL-FILM 24K3 +/- 1% 250mW 200V 50 ppm/DEG.C, SURFACE MOUNTED, SIZE MINI-MELF,	VISHAY COMPONENTS	SMM0204-24K3-1%50ppm
R235	24811/236	RESISTOR-FIXED METAL-FILM 432K +/- 1% 250mW 200V 50 ppm/DEG.C, SURFACE MOUNTED, SIZE MINI-MELF,	VISHAY COMPONENTS	SMM0204-432K-1%50ppm
R236	24811/241	RESISTOR-FIXED METAL-FILM 681K +/- 1% 250mW 200V 50 ppm/DEG.C, SURFACE MOUNTED, SIZE MINI-MELF,	VISHAY COMPONENTS	SMM0204-681K-1%50ppm
R237	24811/194	RESISTOR-FIXED METAL-FILM 7K5 +/- 1% 250mW 200V 50 ppm/DEG.C, SURFACE MOUNTED, SIZE MINI-MELF, (8mm	VISHAY COMPONENTS	SMM0204-7K5-1%50ppm
R238 to R240	24811/142	RESISTOR-FIXED METAL-FILM 51R1 +/- 1% 250mW 200V 50 ppm/DEG.C, SURFACE MOUNTED, SIZE MINI-MELF,	VISHAY COMPONENTS	SMM0204-51R1-1%50ppm
R241 to R248	24811/197	RESISTOR-FIXED METAL-FILM 10K +/- 1% 250mW 200V 50 ppm/DEG.C, SURFACE MOUNTED, SIZE MINI-MELF, (8mm	VISHAY COMPONENTS	SMM0204-10K-1%50ppm
R249	24811/201	RESISTOR-FIXED METAL-FILM 15K +/- 1% 250mW 200V 50 ppm/DEG.C, SURFACE MOUNTED, SIZE MINI-MELF, (8mm	VISHAY COMPONENTS	SMM0204-15K-1%50ppm
R250	24811/223	RESISTOR-FIXED METAL-FILM 121K +/- 1% 250mW 200V 50 ppm/DEG.C, SURFACE MOUNTED, SIZE MINI-MELF,	VISHAY COMPONENTS	SMM0204-121K-1%50ppm
R251	24811/217	RESISTOR-FIXED METAL-FILM 68K1 +/- 1% 250mW 200V 50 ppm/DEG.C, SURFACE MOUNTED, SIZE MINI-MELF,	VISHAY COMPONENTS	SMM0204-68K1-1%50ppm
R252	24811/137	RESISTOR-FIXED METAL-FILM 33R2 +/- 1% 250mW 200V 50 ppm/DEG.C, SURFACE MOUNTED, SIZE MINI-MELF,	VISHAY COMPONENTS	SMM0204-33R2-1%50ppm
R253	24811/137	RESISTOR-FIXED METAL-FILM 33R2 +/- 1% 250mW 200V 50 ppm/DEG.C, SURFACE MOUNTED, SIZE MINI-MELF,	VISHAY COMPONENTS	SMM0204-33R2-1%50ppm
R254	24811/133	RESISTOR-FIXED METAL-FILM 22R1 +/- 1% 250mW 200V 50 ppm/DEG.C, SURFACE MOUNTED, SIZE MINI-MELF,	VISHAY COMPONENTS	SMM0204-22R1-1%50ppm
R255	24811/133	RESISTOR-FIXED METAL-FILM 22R1 +/- 1% 250mW 200V 50 ppm/DEG.C, SURFACE MOUNTED, SIZE MINI-MELF,	VISHAY COMPONENTS	SMM0204-22R1-1%50ppm
R256 to R258	24811/197	RESISTOR-FIXED METAL-FILM 10K +/- 1% 250mW 200V 50 ppm/DEG.C, SURFACE MOUNTED, SIZE MINI-MELF, (8mm	VISHAY COMPONENTS	SMM0204-10K-1%50ppm
SKA	23436/708	CONNECTOR FLEXIBLE CIRCUIT, SOCKET, 14 WAY, RIGHT ANGLED, 1.25mm PITCH, PCB MOUNTING, 2 ROWS OF	MOLEX ELECTRONICS	52044-1410

Microprocessor B2/1 (contd.)

Cir. Ref.	MI part number	Description	Manufacturer	Manufacturer's part number
TR2	28457/850	TRANSISTOR NPN BIPOLAR FMMT2369... 40V 600MHz 300mW 500mA 40hFE MIN @ 10mA, MARKING CODE *1J,	PHILIPS	PMBT2369
TR3	28457/850	TRANSISTOR NPN BIPOLAR FMMT2369... 40V 600MHz 300mW 500mA 40hFE MIN @ 10mA, MARKING CODE *1J,	PHILIPS	PMBT2369
TR4 to TR17	28487/811	TRANSISTOR NPN BIPOLAR BC818-40... 25V 170MHz 330mW 500mA 250hFE MIN @ 100mA, MARKING CODE 6G,	PHILIPS	BC818-40
TR18	28435/241	TRANSISTOR PNP BIPOLAR BCX17... 45V 100MHz 425mW 500mA 100hFE MIN @ 100mA, MARKING CODE T1, SURFACE	PHILIPS	BCX17
TR19	28435/241	TRANSISTOR PNP BIPOLAR BCX17... 45V 100MHz 425mW 500mA 100hFE MIN @ 100mA, MARKING CODE T1, SURFACE	PHILIPS	BCX17
TR20	28457/850	TRANSISTOR NPN BIPOLAR FMMT2369... 40V 600MHz 300mW 500mA 40hFE MIN @ 10mA, MARKING CODE *1J,	PHILIPS	PMBT2369
TR21	28487/811	TRANSISTOR NPN BIPOLAR BC818-40... 25V 170MHz 330mW 500mA 250hFE MIN @ 100mA, MARKING CODE 6G,	PHILIPS	BC818-40
TR22	28435/241	TRANSISTOR PNP BIPOLAR BCX17... 45V 100MHz 425mW 500mA 100hFE MIN @ 100mA, MARKING CODE T1, SURFACE	PHILIPS	BCX17
TR23 to TR29	28487/811	TRANSISTOR NPN BIPOLAR BC818-40... 25V 170MHz 330mW 500mA 250hFE MIN @ 100mA, MARKING CODE 6G,	PHILIPS	BC818-40
TR30	28457/850	TRANSISTOR NPN BIPOLAR FMMT2369... 40V 600MHz 300mW 500mA 40hFE MIN @ 10mA, MARKING CODE *1J,	PHILIPS	PMBT2369
TR31	28457/850	TRANSISTOR NPN BIPOLAR FMMT2369... 40V 600MHz 300mW 500mA 40hFE MIN @ 10mA, MARKING CODE *1J,	PHILIPS	PMBT2369
TR32	28459/084	TRANSISTOR N-CHANNEL-ENHANCE MOSFET BST82... 80V 300mW 175mA 7R SWITCH ON & OFF <10nS, MARKING CODE	PHILIPS	BST82
TR33	28459/084	TRANSISTOR N-CHANNEL-ENHANCE MOSFET BST82... 80V 300mW 175mA 7R SWITCH ON & OFF <10nS, MARKING CODE	PHILIPS	BST82
TR34	28457/850	TRANSISTOR NPN BIPOLAR FMMT2369... 40V 600MHz 300mW 500mA 40hFE MIN @ 10mA, MARKING CODE *1J,	PHILIPS	PMBT2369

Cir. Ref.	MI part number	Description	Manufacturer	Manufacturer's part number

Cellular radio systems board (optional) B3/1

When ordering, prefix circuit reference with B3/1.

	44830-181	Complete unit	Issue 003	
C1	26451/009	CAPACITOR-FIXED ALUMINIUM 47uF +/-20% 16V ELECTROLYTIC, SURFACE-MOUNTED, SIZE 6.6 x 6.6mm,	PANASONIC INDUSTRIAL	ECE-V-1CA-470P
C2	26451/010	CAPACITOR-FIXED ALUMINIUM 100uF +/-20% 6.3V ELECTROLYTIC, SURFACE-MOUNTED, SIZE 6.6 x 6.6mm,	PANASONIC INDUSTRIAL	ECE-V-0JA-101P
C3	26451/009	CAPACITOR-FIXED ALUMINIUM 47uF +/-20% 16V ELECTROLYTIC, SURFACE-MOUNTED, SIZE 6.6 x 6.6mm,	PANASONIC INDUSTRIAL	ECE-V-1CA-470P
C4	26451/004	CAPACITOR-FIXED ALUMINIUM 10uF +/-20% 35V ELECTROLYTIC, SURFACE-MOUNTED, SIZE 5.3 x 5.3mm,	DUBILIER CAPACITORS	DVC-10/35-T/R
C5	26451/004	CAPACITOR-FIXED ALUMINIUM 10uF +/-20% 35V ELECTROLYTIC, SURFACE-MOUNTED, SIZE 5.3 x 5.3mm,	DUBILIER CAPACITORS	DVC-10/35-T/R
C6 to C9	26386/760	CAPACITOR-FIXED CERAMIC 220nF +/-10% 50V X7R MULTILAYER, SURFACE-MOUNTED, SIZE 1210, NICKEL	PHILIPS	1210-2R-224-K9-BBC
C10	26386/824	CAPACITOR-FIXED CERAMIC 100pF +/-5% 50V NP0 MULTILAYER, SURFACE-MOUNTED, SIZE 0805, NICKEL	ROHM ELECTRONICS LTD	MCH21-5A-101-JP
C11	26386/828	CAPACITOR-FIXED CERAMIC 220pF +/-5% 50V NP0 MULTILAYER, SURFACE-MOUNTED, SIZE 0805, NICKEL	ROHM ELECTRONICS LTD	MCH21-5A-221-JP
C12 to C15	26386/760	CAPACITOR-FIXED CERAMIC 220nF +/-10% 50V X7R MULTILAYER, SURFACE-MOUNTED, SIZE 1210, NICKEL	PHILIPS	1210-2R-224-K9-BBC
C16 to C18	26386/863	CAPACITOR-FIXED CERAMIC 1nF +/-10% 50V X7R/2C1, MULTILAYER, SURFACE-MOUNTED, SIZE 0805, NICKEL	ROHM ELECTRONICS LTD	MCH21-5C-102-KP
C19	26386/760	CAPACITOR-FIXED CERAMIC 220nF +/-10% 50V X7R MULTILAYER, SURFACE-MOUNTED, SIZE 1210, NICKEL	PHILIPS	1210-2R-224-K9-BBC
C20	26386/830	CAPACITOR-FIXED CERAMIC 330pF +/-5% 50V NP0 MULTILAYER, SURFACE-MOUNTED, SIZE 0805, NICKEL	ROHM ELECTRONICS LTD	MCH21-5A-331-JP
C21	26386/863	CAPACITOR-FIXED CERAMIC 1nF +/-10% 50V X7R/2C1, MULTILAYER, SURFACE-MOUNTED, SIZE 0805, NICKEL	ROHM ELECTRONICS LTD	MCH21-5C-102-KP
C22	26386/760	CAPACITOR-FIXED CERAMIC 220nF +/-10% 50V X7R MULTILAYER, SURFACE-MOUNTED, SIZE 1210, NICKEL	PHILIPS	1210-2R-224-K9-BBC
C23	26386/830	CAPACITOR-FIXED CERAMIC 330pF +/-5% 50V NP0 MULTILAYER, SURFACE-MOUNTED, SIZE 0805, NICKEL	ROHM ELECTRONICS LTD	MCH21-5A-331-JP
C50 to C86	26386/875	CAPACITOR-FIXED CERAMIC 10nF +/-10% 50V X7R/2C1, MULTILAYER, SURFACE-MOUNTED, SIZE 0805, NICKEL	ROHM ELECTRONICS LTD	MCH21-5C-103-KP
C87	26343/788	CAPACITOR-FIXED CERAMIC 680pF +/-5% 50V NPO MULTILAYER, SURFACE-MOUNTED, SIZE 0805, NICKEL	ROHM ELECTRONICS LTD	MCH21-5A-681-JP
C88	26451/010	CAPACITOR-FIXED ALUMINIUM 100uF +/-20% 6.3V ELECTROLYTIC, SURFACE-MOUNTED, SIZE 6.6 x 6.6mm,	PANASONIC INDUSTRIAL	ECE-V-0JA-101P
C89	26343/788	CAPACITOR-FIXED CERAMIC 680pF +/-5% 50V NPO MULTILAYER, SURFACE-MOUNTED, SIZE 0805, NICKEL	ROHM ELECTRONICS LTD	MCH21-5A-681-JP
C90 to C94	26386/875	CAPACITOR-FIXED CERAMIC 10nF +/-10% 50V X7R/2C1, MULTILAYER, SURFACE-MOUNTED, SIZE 0805, NICKEL	ROHM ELECTRONICS LTD	MCH21-5C-103-KP
D1 to D10	28349/034	DIODE SMALL-SIGNAL, SCHOTTKY, BAT54... 160mW 30V 100mA MARKING CODE L4p, SURFACE MOUNTED, SOT-23,	PHILIPS	BAT54-T1

Cellular radio systems board (optional) B3/1 (contd.)

Cir. Ref.	MI part number	Description	Manufacturer	Manufacturer's part number
IC1	28466/122	IC-DIGITAL OR-GATE 74ACT32... 2 INPUT, QUAD, CMOS-ADVANCED+TTL, 14 PIN, SMALL-OUTLINE.	NAT. SEMICONDUCTOR	74ACT32SC
IC2	28462/430	IC-DIGITAL FLIP-FLOP/D-TYPE 74HCT374... 1 INPUT, OCTAL, NON-INVERTING, POS EDGE TRIGGER, TRI-STATE,	PHILIPS	74HCT374D
IC3	28462/136	IC-DIGITAL FLIP-FLOP/D-TYPE 74HCT74... 2 BIT, DUAL, POS EDGE TRIGGER, PLUS SET & CLEAR,	PHILIPS	74HCT74D
IC4	28466/032	IC-DIGITAL AND-GATE 74HC08... 2 INPUT, QUAD, CMOS-H/SPEED, 14 PIN, SMALL-OUTLINE.	PHILIPS	74HC08D
IC5	28462/430	IC-DIGITAL FLIP-FLOP/D-TYPE 74HCT374... 1 INPUT, OCTAL, NON-INVERTING, POS EDGE TRIGGER, TRI-STATE,	PHILIPS	74HCT374D
IC6	28462/136	IC-DIGITAL FLIP-FLOP/D-TYPE 74HCT74... 2 BIT, DUAL, POS EDGE TRIGGER, PLUS SET & CLEAR,	PHILIPS	74HCT74D
IC7	28466/388	IC-DIGITAL NAND-GATE 74HCT10... 3 INPUT, TRIPLE, CMOS-H/SPEED+TTL, 14 PIN, SMALL-OUTLINE.	PHILIPS	74HCT10D
IC8	28469/058	IC-DIGITAL BUFFER/LINE-DRIVER 74HC244... 4 INPUT, 4 BIT, DUAL, NON-INVERTING, TRI-STATE BUS,	PHILIPS	74HC244D
IC9	28466/122	IC-DIGITAL OR-GATE 74ACT32... 2 INPUT, QUAD, CMOS-ADVANCED+TTL, 14 PIN, SMALL-OUTLINE.	NAT. SEMICONDUCTOR	74ACT32SC
IC10	28466/122	IC-DIGITAL OR-GATE 74ACT32... 2 INPUT, QUAD, CMOS-ADVANCED+TTL, 14 PIN, SMALL-OUTLINE.	NAT. SEMICONDUCTOR	74ACT32SC
IC11	28469/066	IC-DIGITAL INVERTER 74ACT04... HEX, CMOS-ADVANCED+TTL, 14 PIN, SMALL-OUTLINE.	NAT. SEMICONDUCTOR	74ACT04SC
IC12	28462/141	IC-DIGITAL FLIP-FLOP/D-TYPE 74HCT377... OCTAL, POS EDGE TRIGGER WITH DATA ENABLE, CMOS-H/SPEED+TTL,	PHILIPS	74HCT377D
IC13	28467/096	IC-MICRO PROCESSOR, 16 BIT, 68000... 10MHz, HMOS, 68 PIN, PLCC.	MOTOROLA INC.	MC68HC000/FN/12
IC14	44535/305	IC-PROGRAMMED PAL, SET OF 1, 2945, ADDRESS DECODER B3.	MARCONI INSTRUMENTS LTD	
IC15	28466/122	IC-DIGITAL OR-GATE 74ACT32... 2 INPUT, QUAD, CMOS-ADVANCED+TTL, 14 PIN, SMALL-OUTLINE.	NAT. SEMICONDUCTOR	74ACT32SC
IC16	44533/440	IC PROGRAMMED EPROM. SET OF 2	MARCONI INSTRUMENTS LTD	
IC17	44533/440	IC PROGRAMMED EPROM. SET OF 2	MARCONI INSTRUMENTS LTD	
IC20	28467/117	IC-MICRO STATIC-RAM, 128K x 8 BIT, HM628128... 5V, 100nS, 50uA MAX STANDBY CURRENT, CMOS, 32 PIN,	TOSHIBA (UK) LTD	TC551001BFL-10L
IC21	28467/117	IC-MICRO STATIC-RAM, 128K x 8 BIT, HM628128... 5V, 100nS, 50uA MAX STANDBY CURRENT, CMOS, 32 PIN,	TOSHIBA (UK) LTD	TC551001BFL-10L
IC22	44535/306	IC-PROGRAMMED FPGA, SET OF 1, 2945, DSP ARBITRATOR B3.	MARCONI INSTRUMENTS LTD	
IC23 to IC25	28467/108	IC-MICRO DIGIT/SGNL PROCESSR, ADSP2105... 10MHz DIGITAL SIGNAL PROCESSING, 1K PROGRAM & 0.5K DATA	ANALOG DEVICES LTD	ADSP2105KP-40
IC26	28469/546	IC-DIGITAL FILTER DF1700... 16 INPUT, SINGLE, 8 x OVER SAMPLING, STOPBAND ATTEN >110dB, USER SELECT	NIPPON PRECISION	SM5813/APT
IC27	28461/780	IC-ANALOGUE VOLTAGE-REGULATOR 79L05AC... 5V 100mA NEGATIVE, LINEAR, 5% REGULATION, MONOLITHIC, 8	NAT. SEMICONDUCTOR	LM79L05ACM
IC28	28461/814	IC-ANALOGUE A/D CONVERTER AD7870... 5V 12 BIT, WITH ON CHIP REFERENCE, TRACK/HOLD AMP AND	ANALOG DEVICES LTD	AD7870LN
IC29	28461/459	IC-ANALOGUE OPERATIONAL AMP TL032... DUAL, 15V U/GAIN BANDWDTH 1.1MHz, OFFSET VOLTAGE 2.0mV, SLEW	TEXAS INSTRUMENTS	TL032CD
IC30	28461/805	IC-ANALOGUE D/A-CONVERTER AD1865... DUAL, 5V 18 BIT, AUDIO, SERIAL INPUT, CO-PHASED OUTPUT, 116dB	ANALOG DEVICES LTD	AD1865N
IC31	28461/459	IC-ANALOGUE OPERATIONAL AMP TL032... DUAL, 15V U/GAIN BANDWDTH 1.1MHz, OFFSET VOLTAGE 2.0mV, SLEW	TEXAS INSTRUMENTS	TL032CD

Cir. Ref.	MI part number	Description	Manufacturer	Manufacturer's part number
Cellular radio systems board (optional) B3/1 (contd.)				
IC32	28469/756	IC-ANALOGUE MULTIPLEXER 74HC4051... SINGLE, 8 CHANNEL, 3 SELECT INPUTS PLUS ENABLE,	PHILIPS	74HC4051D
IC33	28466/032	IC-DIGITAL AND-GATE 74HC08... 2 INPUT, QUAD, CMOS-H/SPEED, 14 PIN, SMALL-OUTLINE.	PHILIPS	74HC08D
IC34	28465/053	IC-DIGITAL DECODER/DEMULTIPLEX 74HCT138... 3 INPUT, 8 BIT, SINGLE, INVERTING, 3 BIT ADDRESS,	PHILIPS	74HCT138D
IC35	28462/136	IC-DIGITAL FLIP-FLOP/D-TYPE 74HCT74... 2 BIT, DUAL, POS EDGE TRIGGER, PLUS SET & CLEAR,	PHILIPS	74HCT74D
IC36	28469/063	IC-DIGITAL BUFFER/LINE-DRIVER 74HC125... QUAD, TRI-STATE, LOW ENABLE, CMOS-H/SPEED, 14 PIN,	PHILIPS	74HC125D
IC37	28467/154	IC-MICRO PERIPHERAL, MXD1210... NON-VOLATILE RAM CONTROLLER & POWER SUPPLY MONITOR, CMOS, 8 PIN,	MAXIM INTEG PRODUCTS	MXD1210CSA
IC38	28467/154	IC-MICRO PERIPHERAL, MXD1210... NON-VOLATILE RAM CONTROLLER & POWER SUPPLY MONITOR, CMOS, 8 PIN,	MAXIM INTEG PRODUCTS	MXD1210CSA
L1	23642/533	INDUCTOR-FIXED 10uH +/- 5% EPOXY-MOULD, 150mA 2R1 MAX, 30 Q @ 2.52 MHz, 36 MHz SRF, SURFACE MOUNTED,	MEGGITT ELECTRONICS	3612-T-100-J
L2	23642/533	INDUCTOR-FIXED 10uH +/- 5% EPOXY-MOULD, 150mA 2R1 MAX, 30 Q @ 2.52 MHz, 36 MHz SRF, SURFACE MOUNTED,	MEGGITT ELECTRONICS	3612-T-100-J
PLB to PLM	23435/120	CONNECTOR MULTIWAY, PCB HEADER, 36 WAY, RIGHT ANGLED, 2.54mm PITCH, PINS GOLD PLATED TO CLASS 2,	BERG ELECTRONICS	75168-101-36
R1 to R7	24811/173	RESISTOR-FIXED METAL-FILM 1K +/- 1% 250mW 200V 50 ppm/DEG.C, SURFACE MOUNTED, SIZE MINI-MELF, (8mm	VISHAY COMPONENTS	SMM0204-1K0-1%-50ppm
R8	24811/197	RESISTOR-FIXED METAL-FILM 10K +/- 1% 250mW 200V 50 ppm/DEG.C, SURFACE MOUNTED, SIZE MINI-MELF, (8mm	VISHAY COMPONENTS	SMM0204-10K-1%50ppm
R9	24811/173	RESISTOR-FIXED METAL-FILM 1K +/- 1% 250mW 200V 50 ppm/DEG.C, SURFACE MOUNTED, SIZE MINI-MELF, (8mm	VISHAY COMPONENTS	SMM0204-1K0-1%-50ppm
R10	24811/197	RESISTOR-FIXED METAL-FILM 10K +/- 1% 250mW 200V 50 ppm/DEG.C, SURFACE MOUNTED, SIZE MINI-MELF, (8mm	VISHAY COMPONENTS	SMM0204-10K-1%50ppm
R11	24811/197	RESISTOR-FIXED METAL-FILM 10K +/- 1% 250mW 200V 50 ppm/DEG.C, SURFACE MOUNTED, SIZE MINI-MELF, (8mm	VISHAY COMPONENTS	SMM0204-10K-1%50ppm
R12	24811/173	RESISTOR-FIXED METAL-FILM 1K +/- 1% 250mW 200V 50 ppm/DEG.C, SURFACE MOUNTED, SIZE MINI-MELF, (8mm	VISHAY COMPONENTS	SMM0204-1K0-1%-50ppm
R13 to R18	24811/197	RESISTOR-FIXED METAL-FILM 10K +/- 1% 250mW 200V 50 ppm/DEG.C, SURFACE MOUNTED, SIZE MINI-MELF, (8mm	VISHAY COMPONENTS	SMM0204-10K-1%50ppm
R19	24811/173	RESISTOR-FIXED METAL-FILM 1K +/- 1% 250mW 200V 50 ppm/DEG.C, SURFACE MOUNTED, SIZE MINI-MELF, (8mm	VISHAY COMPONENTS	SMM0204-1K0-1%-50ppm
R20	24811/149	RESISTOR-FIXED METAL-FILM 100R +/- 1% 250mW 200V 50 ppm/DEG.C, SURFACE MOUNTED, SIZE MINI-MELF,	VISHAY COMPONENTS	SMM0204-100R-1%50ppm
R21	24811/189	RESISTOR-FIXED METAL-FILM 4K75 +/- 1% 250mW 200V 50 ppm/DEG.C, SURFACE MOUNTED, SIZE MINI-MELF,	VISHAY COMPONENTS	SMM0204-4K75-1%50ppm
R22	24811/180	RESISTOR-FIXED METAL-FILM 2K +/- 1% 250mW 200V 50 ppm/DEG.C, SURFACE MOUNTED, SIZE MINI-MELF, (8mm	VISHAY COMPONENTS	SMM0204-2K0-1%50ppm
R23	24811/189	RESISTOR-FIXED METAL-FILM 4K75 +/- 1% 250mW 200V 50 ppm/DEG.C, SURFACE MOUNTED, SIZE MINI-MELF,	VISHAY COMPONENTS	SMM0204-4K75-1%50ppm

Cir. Ref.	MI part number	Description	Manufacturer	Manufacturer's part number
Cellular radio systems board (optional) B3/1 (contd.)				
R24	24811/173	RESISTOR-FIXED METAL-FILM 1K +/- 1% 250mW 200V 50 ppm/DEG.C, SURFACE MOUNTED, SIZE MINI-MELF, (8mm	VISHAY COMPONENTS	SMM0204-1K0-1%-50ppm
R25	24811/173	RESISTOR-FIXED METAL-FILM 1K +/- 1% 250mW 200V 50 ppm/DEG.C, SURFACE MOUNTED, SIZE MINI-MELF, (8mm	VISHAY COMPONENTS	SMM0204-1K0-1%-50ppm
R26	24811/197	RESISTOR-FIXED METAL-FILM 10K +/- 1% 250mW 200V 50 ppm/DEG.C, SURFACE MOUNTED, SIZE MINI-MELF, (8mm	VISHAY COMPONENTS	SMM0204-10K-1%50ppm
R27	24811/173	RESISTOR-FIXED METAL-FILM 1K +/- 1% 250mW 200V 50 ppm/DEG.C, SURFACE MOUNTED, SIZE MINI-MELF, (8mm	VISHAY COMPONENTS	SMM0204-1K0-1%-50ppm
R28	24811/173	RESISTOR-FIXED METAL-FILM 1K +/- 1% 250mW 200V 50 ppm/DEG.C, SURFACE MOUNTED, SIZE MINI-MELF, (8mm	VISHAY COMPONENTS	SMM0204-1K0-1%-50ppm
R29	24811/197	RESISTOR-FIXED METAL-FILM 10K +/- 1% 250mW 200V 50 ppm/DEG.C, SURFACE MOUNTED, SIZE MINI-MELF, (8mm	VISHAY COMPONENTS	SMM0204-10K-1%50ppm
R30	24811/173	RESISTOR-FIXED METAL-FILM 1K +/- 1% 250mW 200V 50 ppm/DEG.C, SURFACE MOUNTED, SIZE MINI-MELF, (8mm	VISHAY COMPONENTS	SMM0204-1K0-1%-50ppm
R31	24811/173	RESISTOR-FIXED METAL-FILM 1K +/- 1% 250mW 200V 50 ppm/DEG.C, SURFACE MOUNTED, SIZE MINI-MELF, (8mm	VISHAY COMPONENTS	SMM0204-1K0-1%-50ppm
R32	24811/197	RESISTOR-FIXED METAL-FILM 10K +/- 1% 250mW 200V 50 ppm/DEG.C, SURFACE MOUNTED, SIZE MINI-MELF, (8mm	VISHAY COMPONENTS	SMM0204-10K-1%50ppm
R33	24811/173	RESISTOR-FIXED METAL-FILM 1K +/- 1% 250mW 200V 50 ppm/DEG.C, SURFACE MOUNTED, SIZE MINI-MELF, (8mm	VISHAY COMPONENTS	SMM0204-1K0-1%-50ppm
R34	24811/173	RESISTOR-FIXED METAL-FILM 1K +/- 1% 250mW 200V 50 ppm/DEG.C, SURFACE MOUNTED, SIZE MINI-MELF, (8mm	VISHAY COMPONENTS	SMM0204-1K0-1%-50ppm
R35	24811/197	RESISTOR-FIXED METAL-FILM 10K +/- 1% 250mW 200V 50 ppm/DEG.C, SURFACE MOUNTED, SIZE MINI-MELF, (8mm	VISHAY COMPONENTS	SMM0204-10K-1%50ppm
R36	24811/197	RESISTOR-FIXED METAL-FILM 10K +/- 1% 250mW 200V 50 ppm/DEG.C, SURFACE MOUNTED, SIZE MINI-MELF, (8mm	VISHAY COMPONENTS	SMM0204-10K-1%50ppm
R37	24811/218	RESISTOR-FIXED METAL-FILM 75K +/- 1% 250mW 200V 50 ppm/DEG.C, SURFACE MOUNTED, SIZE MINI-MELF, (8mm	VISHAY COMPONENTS	SMM0204-75K-1%50ppm
R38 to R42	24811/197	RESISTOR-FIXED METAL-FILM 10K +/- 1% 250mW 200V 50 ppm/DEG.C, SURFACE MOUNTED, SIZE MINI-MELF, (8mm	VISHAY COMPONENTS	SMM0204-10K-1%50ppm
R43 to R48	24811/193	RESISTOR-FIXED METAL-FILM 6K81 +/- 1% 250mW 200V 50 ppm/DEG.C, SURFACE MOUNTED, SIZE MINI-MELF,	VISHAY COMPONENTS	SMM0204-6K81-1%50ppm
R49	24811/197	RESISTOR-FIXED METAL-FILM 10K +/- 1% 250mW 200V 50 ppm/DEG.C, SURFACE MOUNTED, SIZE MINI-MELF, (8mm	VISHAY COMPONENTS	SMM0204-10K-1%50ppm
R50	24811/197	RESISTOR-FIXED METAL-FILM 10K +/- 1% 250mW 200V 50 ppm/DEG.C, SURFACE MOUNTED, SIZE MINI-MELF, (8mm	VISHAY COMPONENTS	SMM0204-10K-1%50ppm
R51 to R54	24811/163	RESISTOR-FIXED METAL-FILM 392R +/- 1% 250mW 200V 50 ppm/DEG.C, SURFACE MOUNTED, SIZE MINI-MELF,	VISHAY COMPONENTS	SMM0204-392R-1%50ppm
R55 to R59	24811/173	RESISTOR-FIXED METAL-FILM 1K +/- 1% 250mW 200V 50 ppm/DEG.C, SURFACE MOUNTED, SIZE MINI-MELF, (8mm	VISHAY COMPONENTS	SMM0204-1K0-1%-50ppm
R60	24811/101	RESISTOR-FIXED METAL-FILM 1R +/- 1% 250mW 200V 50 ppm/DEG.C, SURFACE MOUNTED, SIZE MINI-MELF, (8mm	VISHAY COMPONENTS	SMM0204-1R-1%-50ppm
R62	24811/101	RESISTOR-FIXED METAL-FILM 1R +/- 1% 250mW 200V 50 ppm/DEG.C, SURFACE MOUNTED, SIZE MINI-MELF, (8mm	VISHAY COMPONENTS	SMM0204-1R-1%-50ppm
R63	24811/173	RESISTOR-FIXED METAL-FILM 1K +/- 1% 250mW 200V 50 ppm/DEG.C, SURFACE MOUNTED, SIZE MINI-MELF, (8mm	VISHAY COMPONENTS	SMM0204-1K0-1%-50ppm
R64	24811/173	RESISTOR-FIXED METAL-FILM 1K +/- 1% 250mW 200V 50 ppm/DEG.C, SURFACE MOUNTED, SIZE MINI-MELF, (8mm	VISHAY COMPONENTS	SMM0204-1K0-1%-50ppm
R65	24811/149	RESISTOR-FIXED METAL-FILM 100R +/- 1% 250mW 200V 50 ppm/DEG.C, SURFACE MOUNTED, SIZE MINI-MELF,	VISHAY COMPONENTS	SMM0204-100R-1%50ppm
R67	24811/184	RESISTOR-FIXED METAL-FILM 3K01 +/- 1% 250mW 200V 50 ppm/DEG.C, SURFACE MOUNTED, SIZE MINI-MELF,	VISHAY COMPONENTS	SMM0204-3K01-1%50ppm

Cir. Ref.	MI part number	Description	Manufacturer	Manufacturer's part number
Cellular radio systems board (optional) B3/1 (contd.)				
R68	24811/197	RESISTOR-FIXED METAL-FILM 10K +/- 1% 250mW 200V 50 ppm/DEG.C, SURFACE MOUNTED, SIZE MINI-MELF, (8mm	VISHAY COMPONENTS	SMM0204-10K-1%50ppm
R69	24811/202	RESISTOR-FIXED METAL-FILM 16K2 +/- 1% 250mW 200V 50 ppm/DEG.C, SURFACE MOUNTED, SIZE MINI-MELF,	VISHAY COMPONENTS	SMM0204-16K2-1%50ppm
R70 to R77	24811/197	RESISTOR-FIXED METAL-FILM 10K +/- 1% 250mW 200V 50 ppm/DEG.C, SURFACE MOUNTED, SIZE MINI-MELF, (8mm	VISHAY COMPONENTS	SMM0204-10K-1%50ppm
R78	24811/204	RESISTOR-FIXED METAL-FILM 20K +/- 1% 250mW 200V 50 ppm/DEG.C, SURFACE MOUNTED, SIZE MINI-MELF, (8mm	VISHAY COMPONENTS	SMM0204-20K-1%50ppm
TR1	28453/829	TRANSISTOR NPN BIPOLAR BC848B... 30V 200MHz 200mW 100mA 290hFE @ 2mA, NOISE 2dB @ 1KHz, MARKING CODE	PHILIPS	BC848B
TR2	28453/829	TRANSISTOR NPN BIPOLAR BC848B... 30V 200MHz 200mW 100mA 290hFE @ 2mA, NOISE 2dB @ 1KHz, MARKING CODE	PHILIPS	BC848B
TR3	28453/829	TRANSISTOR NPN BIPOLAR BC848B... 30V 200MHz 200mW 100mA 290hFE @ 2mA, NOISE 2dB @ 1KHz, MARKING CODE	PHILIPS	BC848B
TR4	28453/829	TRANSISTOR NPN BIPOLAR BC848B... 30V 200MHz 200mW 100mA 290hFE @ 2mA, NOISE 2dB @ 1KHz, MARKING CODE	PHILIPS	BC848B
TR5	28453/829	TRANSISTOR NPN BIPOLAR BC848B... 30V 200MHz 200mW 100mA 290hFE @ 2mA, NOISE 2dB @ 1KHz, MARKING CODE	PHILIPS	BC848B

Cir. Ref.	MI part number	Description	Manufacturer	Manufacturer's part number

600 Ω audio input/output interface (optional) B4

When ordering, prefix circuit reference with B4.

	44829-972	Complete unit	Issue 004	
C1	26582/421	CAPACITOR-FIXED POLYESTER 4.7uF +/-10% 63V RADIAL, 22.5mm PWP, (LOOSE).	VISHAY COMPONENTS	MKT-1822-547/065
C2	26343/447	CAPACITOR-FIXED CERAMIC 330pF +/-2% 63V N750 SINGLELAYER, RADIAL, 2.5mm PWP, (TAPED).	VISHAY COMPONENTS	ROU-331-GAK-ACR-J
C3	26421/114	CAPACITOR-FIXED ALUMINIUM 22uF +/-20% 25V ELECTROLYTIC, RADIAL, 5mm PWP, (TAPED).	PANASONIC INDUSTRIAL	ECE-A-1E-KA-220-B
C4	26346/120	CAPACITOR-FIXED CERAMIC 10nF +/-20% 50V X7R MULTILAYER, AXIAL, EPOXY COVERED BODY, (TAPED).	PHILIPS	A41C-103K-DRM
IC1	28469/447	TRANSISTOR NPN ULN2803... ARRAY, 50V 500mA 8xDARLINGTON PAIRS, TTL/CMOS COMPATIBLE, OPEN	MOTOROLA INC.	ULN2803A
R1	24753/460	RESISTOR-FIXED METAL-FILM 649R +/- 0.5% 250mW 200V 50 ppm/DEG.C, AXIAL, (TAPED).	VISHAY COMPONENTS	EE.10-649R-D-T-2
R2	24773/273	RESISTOR-FIXED METAL-FILM 1K +/- 2% 250mW 250V 100 ppm/DEG.C, 1%-1K0-ACCEPTABLE, AXIAL, (TAPED).	VISHAY COMPONENTS	EE.10-1K-G-T-1
R3	24763/788	RESISTOR-FIXED METAL-FILM 60R4 +/- 1% 500mW 250V 100 ppm/DEG.C, AXIAL, (TAPED).	VISHAY COMPONENTS	EE.125-60R4-F-T-1
R4	24753/405	RESISTOR-FIXED METAL-FILM 6R9 +/- 0.5% 250mW 200V 50 ppm/DEG.C, AXIAL, (TAPED).	VISHAY COMPONENTS	EE.10-6R9-D-T-2
R5	24773/259	RESISTOR-FIXED METAL-FILM 270R +/- 2% 250mW 250V 100 ppm/DEG.C, 1%-274R-ACCEPTABLE, AXIAL, (TAPED).	VISHAY COMPONENTS	EE.10-270R-G-T-1
R6	24723/389	RESISTOR-FIXED METAL-FILM 250R +/- 0.25% 250mW 200V 50 ppm/DEG.C, AXIAL, (TAPED).	VISHAY COMPONENTS	EE.10-250R-C-T-2
R7	24773/249	RESISTOR-FIXED METAL-FILM 100R +/- 2% 250mW 250V 100 ppm/DEG.C, 1%-100R-ACCEPTABLE, AXIAL, (TAPED).	VISHAY COMPONENTS	EE.10-100R-G-T-1
R8	24773/273	RESISTOR-FIXED METAL-FILM 1K +/- 2% 250mW 250V 100 ppm/DEG.C, 1%-1K0-ACCEPTABLE, AXIAL, (TAPED).	VISHAY COMPONENTS	EE.10-1K-G-T-1
RLA to RLE	23486/166	RELAY MAGNETIC, DOUBLE-POLE CHANGEOVER, 12V COIL, 720R - CONTACTS 1A, 125V, MAX LOAD 30W, PCB	FUJITSU LTD	FBR46-N-D012-P
SKA	23444/334	CONNECTOR-RF SMB-TYPE MALE, RECEPTACLE, 50 OHMS, PCB-MOUNTING, NICKEL PLATED BODY.	ITT CANNON (UK)	051-051-0000-C90
T1	23622/902	TRANSFORMER LF MATCHING, AUDIO, 1+1PRI : 2+2SEC TURNS RATIO, FOR 150R, 600R & 2K4 IMPEDANCES,	OXFORD ELECTRICAL	A262A2E
T2	23622/902	TRANSFORMER LF MATCHING, AUDIO, 1+1PRI : 2+2SEC TURNS RATIO, FOR 150R, 600R & 2K4 IMPEDANCES,	OXFORD ELECTRICAL	A262A2E

Clr. Ref.	MI part number	Description	Manufacturer	Manufacturer's part number

GPIB interface B7

When ordering, prefix circuit reference with B7.

	44829-991	Complete unit	Issue 002	
C1	26421/112	CAPACITOR-FIXED ALUMINIUM 10uF +/-20% 35V ELECTROLYTIC, RADIAL, 5mm PWP, (TAPED).	PANASONIC INDUSTRIAL	ECE-A-1V-KA-100-B
C2 to C5	26346/120	CAPACITOR-FIXED CERAMIC 10nF +/-20% 50V X7R MULTILAYER, AXIAL, EPOXY COVERED BODY, (TAPED).	PHILIPS	A41C-103K-DRM
IC1	28467/025	IC-MICRO CONTROLLER, 7210... INTERFACE BUS TALK/LISTEN/CONTROL, NMOS, 40 PIN, DUAL-IN-LINE.		
IC2	28469/115	IC-DIGITAL TRANSCEIVER 75161... OCTAL, GPIB-CONTROLLER, TTL-SCHOTTKY-L/PWR, 20 PIN,	NAT. SEMICONDUCTOR	DS75161AN
IC3	28469/114	IC-DIGITAL TRANSCEIVER 75160... OCTAL, GPIB DATA, TTL-SCHOTTKY-L/PWR, 20 PIN, DUAL-IN-LINE.	NAT. SEMICONDUCTOR	DS75160AN
IC4	28469/137	IC-DIGITAL INVERTER 74HC04... HEX, CMOS-H/SPEED, 14 PIN, DUAL-IN-LINE.	PHILIPS	74HC04N
PLA	43137/888	RIBBON-LEAD 26 WAY, SOCKET 26 WAY, - PCB TRANSITION 26 WAY, FLAT MULTICOLOUR CABLE, 400mm		
SKA	23435/133	CONNECTOR TYPE-57, SOCKET, 24 WAY, EDGE MOUNTED, PCB MOUNTING, GOLD OVER NICKEL PLATED CONTACTS,	AMP (GB) LTD	552230-1

Cir. Ref.	MI part number	Description	Manufacturer	Manufacturer's part number

Parallel interface (optional) B10

When ordering, prefix circuit reference with B10.

	44829/992	Complete unit	Issue 007	
C2 to C9	26386/867	CAPACITOR-FIXED CERAMIC 2.2nF +/-10% 50V X7R/2C1, MULTILAYER, SURFACE-MOUNTED, SIZE 0805, NICKEL	ROHM ELECTRONICS LTD	MCH21-5C-222-KP
C10 to C16	26386/863	CAPACITOR-FIXED CERAMIC 1nF +/-10% 50V X7R/2C1, MULTILAYER, SURFACE-MOUNTED, SIZE 0805, NICKEL	ROHM ELECTRONICS LTD	MCH21-5C-102-KP
IC1	28469/058	IC-DIGITAL BUFFER/LINE-DRIVER 74HC244... 4 INPUT, 4 BIT, DUAL, NON-INVERTING, TRI-STATE BUS,	PHILIPS	74HC244D
IC2	28466/120	IC-DIGITAL OR-GATE 74HC32... 2 INPUT, QUAD, CMOS-H/SPEED, 14 PIN, SMALL-OUTLINE.	PHILIPS	74HC32D
IC3	28462/638	IC-DIGITAL FLIP-FLOP/D-TYPE 74HC74... 2 BIT, DUAL, POS EDGE TRIGGER, PLUS SET & CLEAR, CMOS-H/SPEED,	PHILIPS	74HC74D
IC4	28464/184	IC-DIGITAL COUNTER 74HC161... 4 INPUT, 4 BIT, SINGLE, BINARY, PRESETTABLE, SYNCHRONOUS,	PHILIPS	74HC161D
IC5	28462/157	IC-DIGITAL FLIP-FLOP/D-TYPE 74HC377... OCTAL, POS EDGE TRIGGER WITH DATA ENABLE, CMOS-H/SPEED, 20	PHILIPS	74HC377D
IC6	28462/157	IC-DIGITAL FLIP-FLOP/D-TYPE 74HC377... OCTAL, POS EDGE TRIGGER WITH DATA ENABLE, CMOS-H/SPEED, 20	PHILIPS	74HC377D
IC7	28465/056	IC-DIGITAL DECODER/DEMULTIPLEX 74HC139... 2 INPUT, 4 BIT, DUAL, INVERTING, 1 BIT ADDRESS,	PHILIPS	74HC139D
IC8	28469/447	TRANSISTOR NPN ULN2803... ARRAY, 50V 500mA 8xDARLINGTON PAIRS, TTL/CMOS COMPATIBLE, OPEN	MOTOROLA INC.	ULN2803A
PLA	43137/888	RIBBON-LEAD 26 WAY, SOCKET 26 WAY, - PCB TRANSITION 26 WAY, FLAT MULTICOLOUR CABLE, 400mm	MARCONI INSTRUMENTS LTD	
R1	24811/181	RESISTOR-FIXED METAL-FILM 2K21 +/- 1% 250mW 200V 50 ppm/DEG.C, SURFACE MOUNTED, SIZE MINI-MELF,	VISHAY COMPONENTS	SMM0204-2K21-1%50ppm
R2 to R4	24811/189	RESISTOR-FIXED METAL-FILM 4K75 +/- 1% 250mW 200V 50 ppm/DEG.C, SURFACE MOUNTED, SIZE MINI-MELF,	VISHAY COMPONENTS	SMM0204-4K75-1%50ppm
R5 to R13	24811/137	RESISTOR-FIXED METAL-FILM 33R2 +/- 1% 250mW 200V 50 ppm/DEG.C, SURFACE MOUNTED, SIZE MINI-MELF,	VISHAY COMPONENTS	SMM0204-33R2-1%50ppm
R14 to R23	24811/189	RESISTOR-FIXED METAL-FILM 4K75 +/- 1% 250mW 200V 50 ppm/DEG.C, SURFACE MOUNTED, SIZE MINI-MELF,	VISHAY COMPONENTS	SMM0204-4K75-1%50ppm
R24	24811/137	RESISTOR-FIXED METAL-FILM 33R2 +/- 1% 250mW 200V 50 ppm/DEG.C, SURFACE MOUNTED, SIZE MINI-MELF,	VISHAY COMPONENTS	SMM0204-33R2-1%50ppm
RLA to	23486/544	RELAY REED, SINGLE-POLE N/O, 5V COIL, 500R - CONTACTS 0.5A, 100V, INTERNAL DIODE, SPECIAL, PCB	PICKERING ELECTRONIC	106-1-A-5/920D RLRLD
RLRLD	23486/544	RELAY REED, SINGLE-POLE N/O, 5V COIL, 500R - CONTACTS 0.5A, 100V, INTERNAL DIODE, SPECIAL, PCB	PICKERING ELECTRONIC	106-1-A-5/920D
SKA	23436/732	CONNECTOR D-TYPE, SOCKET, 25 WAY, RIGHT ANGLED, TIN PLATED SHELL, PCB MOUNTING, 4-40UNC INSERTS IN	HARTING ELECTRONIK	0966-312-6602
SW1	23465/89	SWITCH ROCKER, SINGLE-POLE 6 SWITCHES, ON-OFF, PCB-MOUNTING, RECESSED ACTUATOR, 12 PIN,	GRAYHILL (USA)	76RSB06 & 76P06

Cir. Ref.	MI part number	Description	Manufacturer	Manufacturer's part number

Light-weight power head interface (optional) B11

When ordering, prefix circuit reference with B11.

	44830/074	Complete unit	Issue 003	
C1	26386/760	CAPACITOR-FIXED CERAMIC 220nF +/-10% 50V X7R MULTILAYER, SURFACE-MOUNTED, SIZE 1210, NICKEL	PHILIPS	1210-2R-224-K9-BBC
C2	26386/760	CAPACITOR-FIXED CERAMIC 220nF +/-10% 50V X7R MULTILAYER, SURFACE-MOUNTED, SIZE 1210, NICKEL	PHILIPS	1210-2R-224-K9-BBC
C3	26451/003	CAPACITOR-FIXED ALUMINIUM 10uF +/-20% 16V ELECTROLYTIC, SURFACE-MOUNTED, SIZE 4.3 x 4.3mm,	PANASONIC INDUSTRIAL	ECE-V-1CA-100R
C4	26386/875	CAPACITOR-FIXED CERAMIC 10nF +/-10% 50V X7R/2C1, MULTILAYER, SURFACE-MOUNTED, SIZE 0805, NICKEL	ROHM ELECTRONICS LTD	MCH21-5C-103-KP
C5	26386/760	CAPACITOR-FIXED CERAMIC 220nF +/-10% 50V X7R MULTILAYER, SURFACE-MOUNTED, SIZE 1210, NICKEL	PHILIPS	1210-2R-224-K9-BBC
C6	26386/777	CAPACITOR-FIXED CERAMIC 47nF +/-20% 63V X7R/2C1, MULTILAYER, SURFACE-MOUNTED, SIZE 1206, NICKEL	PHILIPS	1206-2R-473-K9-BBC
C7	26386/875	CAPACITOR-FIXED CERAMIC 10nF +/-10% 50V X7R/2C1, MULTILAYER, SURFACE-MOUNTED, SIZE 0805, NICKEL	ROHM ELECTRONICS LTD	MCH21-5C-103-KP
C8	26386/875	CAPACITOR-FIXED CERAMIC 10nF +/-10% 50V X7R/2C1, MULTILAYER, SURFACE-MOUNTED, SIZE 0805, NICKEL	ROHM ELECTRONICS LTD	MCH21-5C-103-KP
C10	26386/760	CAPACITOR-FIXED CERAMIC 220nF +/-10% 50V X7R MULTILAYER, SURFACE-MOUNTED, SIZE 1210, NICKEL	PHILIPS	1210-2R-224-K9-BBC
D1	28349/034	DIODE SMALL-SIGNAL, SCHOTTKY, BAT54... 160mW 30V 100mA MARKING CODE L4p, SURFACE MOUNTED, SOT-23,	PHILIPS	BAT54-T1
D2 to D4	28335/670	DIODE BAND SWITCHING, BAT18... 35V 100mA 1pF MAX @ 20V, 1.2Vf @ 100mA, MARKING CODE A2, SURFACE	PHILIPS	BAT18/T1
IC1	28466/393	IC-DIGITAL NAND-GATE 74HC132... 2 INPUT, QUAD, SCHMITT TRIGGER, CMOS-H/SPEED, 14 PIN,	PHILIPS	74HC132D
IC2	28462/153	IC-DIGITAL FLIP-FLOP/J-K 74AC109... DUAL, POS EDGE TRIGGER, PLUS SET AND RESET, CMOS-ADVANCED, 16	NAT. SEMICONDUCTOR	74AC109SC
IC4	28461/774	IC-ANALOGUE VOLTAGE-REGULATOR 78L05AC... 5V +/-5%, POSITIVE, LINEAR, BIPOLAR, 8 PIN, SMALL-OUTLINE.	NAT. SEMICONDUCTOR	LM78L05ACM
IC5	28461/412	IC-ANALOGUE OPERATIONAL AMP TL072... DUAL, 18V UNITY GAIN BNDWDTH 3MHz, OFFSET VOLTAGE 10mV, SLEW	MOTOROLA INC.	TL072CD
R1	24811/205	RESISTOR-FIXED METAL-FILM 22K1 +/- 1% 250mW 200V 50 ppm/DEG.C, SURFACE MOUNTED, SIZE MINI-MELF,	VISHAY COMPONENTS	SMM0204-22K1-1%50ppm
R2	24811/189	RESISTOR-FIXED METAL-FILM 4K75 +/- 1% 250mW 200V 50 ppm/DEG.C, SURFACE MOUNTED, SIZE MINI-MELF,	VISHAY COMPONENTS	SMM0204-4K75-1%50ppm
R3	24811/181	RESISTOR-FIXED METAL-FILM 2K21 +/- 1% 250mW 200V 50 ppm/DEG.C, SURFACE MOUNTED, SIZE MINI-MELF,	VISHAY COMPONENTS	SMM0204-2K21-1%50ppm
R4	24811/241	RESISTOR-FIXED METAL-FILM 681K +/- 1% 250mW 200V 50 ppm/DEG.C, SURFACE MOUNTED, SIZE MINI-MELF,	VISHAY COMPONENTS	SMM0204-681K-1%50ppm
R5	24811/189	RESISTOR-FIXED METAL-FILM 4K75 +/- 1% 250mW 200V 50 ppm/DEG.C, SURFACE MOUNTED, SIZE MINI-MELF,	VISHAY COMPONENTS	SMM0204-4K75-1%50ppm

Cir. Ref.	MI part number	Description	Manufacturer	Manufacturer's part number
Light-weight power head interface (optional) B11 (contd.)				
R6	24811/189	RESISTOR-FIXED METAL-FILM 4K75 +/- 1% 250mW 200V 50 ppm/DEG.C, SURFACE MOUNTED, SIZE MINI-MELF,	VISHAY COMPONENTS	SMM0204-4K75-1%50ppm
R7	24811/197	RESISTOR-FIXED METAL-FILM 10K +/- 1% 250mW 200V 50 ppm/DEG.C, SURFACE MOUNTED, SIZE MINI-MELF, (8mm	VISHAY COMPONENTS	SMM0204-10K-1%50ppm
R8	24811/189	RESISTOR-FIXED METAL-FILM 4K75 +/- 1% 250mW 200V 50 ppm/DEG.C, SURFACE MOUNTED, SIZE MINI-MELF,	VISHAY COMPONENTS	SMM0204-4K75-1%50ppm
R9 to R11	24811/197	RESISTOR-FIXED METAL-FILM 10K +/- 1% 250mW 200V 50 ppm/DEG.C, SURFACE MOUNTED, SIZE MINI-MELF, (8mm	VISHAY COMPONENTS	SMM0204-10K-1%50ppm
R12	24811/205	RESISTOR-FIXED METAL-FILM 22K1 +/- 1% 250mW 200V 50 ppm/DEG.C, SURFACE MOUNTED, SIZE MINI-MELF,	VISHAY COMPONENTS	SMM0204-22K1-1%50ppm
R13	24811/241	RESISTOR-FIXED METAL-FILM 681K +/- 1% 250mW 200V 50 ppm/DEG.C, SURFACE MOUNTED, SIZE MINI-MELF,	VISHAY COMPONENTS	SMM0204-681K-1%50ppm
R14	24811/181	RESISTOR-FIXED METAL-FILM 2K21 +/- 1% 250mW 200V 50 ppm/DEG.C, SURFACE MOUNTED, SIZE MINI-MELF,	VISHAY COMPONENTS	SMM0204-2K21-1%50ppm
R15	24811/181	RESISTOR-FIXED METAL-FILM 2K21 +/- 1% 250mW 200V 50 ppm/DEG.C, SURFACE MOUNTED, SIZE MINI-MELF,	VISHAY COMPONENTS	SMM0204-2K21-1%50ppm
R16	24772/105	RESISTOR-FIXED METAL-FILM 22K +/- 2% 125mW 150V 100 ppm/DEG.C, AXIAL, (TAPED).	VISHAY COMPONENTS	NK3-22K-2%
TR1	28457/850	TRANSISTOR NPN BIPOLAR FMMT2369... 40V 600MHz 300mW 500mA 40hFE MIN @ 10mA, MARKING CODE *1J,	PHILIPS	PMBT2369
TR2	28487/811	TRANSISTOR NPN BIPOLAR BC818-40... 25V 170MHz 330mW 500mA 250hFE MIN @ 100mA, MARKING CODE 6G,	PHILIPS	BC818-40
TR3	28487/811	TRANSISTOR NPN BIPOLAR BC818-40... 25V 170MHz 330mW 500mA 250hFE MIN @ 100mA, MARKING CODE 6G,	PHILIPS	BC818-40
TR4	28435/241	TRANSISTOR PNP BIPOLAR BCX17... 45V 100MHz 425mW 500mA 100hFE MIN @ 100mA, MARKING CODE T1, SURFACE	PHILIPS	BCX17
TR5	28487/811	TRANSISTOR NPN BIPOLAR BC818-40... 25V 170MHz 330mW 500mA 250hFE MIN @ 100mA, MARKING CODE 6G,	PHILIPS	BC818-40
TR6	28457/850	TRANSISTOR NPN BIPOLAR FMMT2369... 40V 600MHz 300mW 500mA 40hFE MIN @ 10mA, MARKING CODE *1J,	PHILIPS	PMBT2369

Cir. Ref.	MI part number	Description	Manufacturer	Manufacturer's part number

Memory card and date/time stamp board B12

When ordering, prefix circuit reference with B12.

	448830-114	Complete unit	Issue 004	
C1	26451/004	CAPACITOR-FIXED ALUMINIUM 10uF +/-20% 35V ELECTROLYTIC, SURFACE-MOUNTED, SIZE 5.3 x 5.3mm,	DUBILIER CAPACITORS	DVC-10/35-T/R
C2	26386/899	CAPACITOR-FIXED CERAMIC 100nF +/-10% 50V X7R/2C1, MULTILAYER, SURFACE-MOUNTED, SIZE 1206, NICKEL	ROHM ELECTRONICS LTD	MCH31-5C-104-KP
C3 to C11	26386/875	CAPACITOR-FIXED CERAMIC 10nF +/-10% 50V X7R/2C1, MULTILAYER, SURFACE-MOUNTED, SIZE 0805, NICKEL	ROHM ELECTRONICS LTD	MCH21-5C-103-KP
IC1	28465/056	IC-DIGITAL DECODER/DEMULTIPLEX 74HC139... 2 INPUT, 4 BIT, DUAL, INVERTING, 1 BIT ADDRESS,	PHILIPS	74HC139D
IC2 to IC4	28462/151	IC-DIGITAL FLIP-FLOP/D-TYPE 74HC374... 1 INPUT, OCTAL, NON-INVERTING, POS EDGE TRIGGER, TRI-STATE,	PHILIPS	74HC374D
IC5	28469/550	IC-DIGITAL TRANSCEIVER 74HC245... OCTAL, TRI-STATE, NON-INVERTING, BI-DIRECTIONAL,	PHILIPS	74HC245D
IC6	28469/058	IC-DIGITAL BUFFER/LINE-DRIVER 74HC244... 4 INPUT, 4 BIT, DUAL, NON-INVERTING, TRI-STATE BUS,	PHILIPS	74HC244D
IC7	28466/120	IC-DIGITAL OR-GATE 74HC32... 2 INPUT, QUAD, CMOS-H/SPEED, 14 PIN, SMALL-OUTLINE.	PHILIPS	74HC32D
IC8	28466/241	IC-DIGITAL NOR-GATE 74HC02... 2 INPUT, QUAD, CMOS-H/SPEED, 14 PIN, SMALL-OUTLINE.	PHILIPS	74HC02D
IC9	28467/119	IC-MICRO REAL-TIME-CLOCK, DS1287... NON-VOLATILE, WITH INTEGRAL LITHIUM BATTERY & CRYSTAL, WITHOUT	DALLAS SEMICONDUCTOR	DS1287
PLA	23435/112	CONNECTOR MULTIWAY, PCB HEADER, 36 WAY, RIGHT ANGLED, 2.54mm PITCH, PINS GOLD PLATED TO CLASS 2,	BERG ELECTRONICS	75168-107-36
PLA	23435/120	CONNECTOR MULTIWAY, PCB HEADER, 36 WAY, RIGHT ANGLED, 2.54mm PITCH, PINS GOLD PLATED TO CLASS 2,	BERG ELECTRONICS	75168-101-36
PLB	23436/725	CONNECTOR MULTIWAY, SOCKET, 68 WAY, RIGHT ANGLED, 2-ROW, 2.54mm PITCH, 1.9mm ROW SPACING, FOR MEMORY	ITT CANNON (UK)	DICMJ-68-P-RPC
R1	24811/197	RESISTOR-FIXED METAL-FILM 10K +/- 1% 250mW 200V 50 ppm/DEG.C, SURFACE MOUNTED, SIZE MINI-MELF, (8mm	VISHAY COMPONENTS	SMM0204-10K-1%50ppm
R2	24811/165	RESISTOR-FIXED METAL-FILM 475R +/- 1% 250mW 200V 50 ppm/DEG.C, SURFACE MOUNTED, SIZE MINI-MELF,	VISHAY COMPONENTS	SMM0204-475R-1%50ppm
R3 to R8	24811/197	RESISTOR-FIXED METAL-FILM 10K +/- 1% 250mW 200V 50 ppm/DEG.C, SURFACE MOUNTED, SIZE MINI-MELF, (8mm	VISHAY COMPONENTS	SMM0204-10K-1%50ppm
R9	24681/671	RESISTOR-NETWORK BUSSED, THICK-FILM, 10K 2% 1W 50V 100 ppm/DEG.C, 9 RESISTORS, LOW PROFILE, 10 PIN,	VISHAY COMPONENTS	LC0-001-1002G
R10	24681/675	RESISTOR-NETWORK BUSSED, THICK-FILM, 100K 2% 1W 50V 100 ppm/DEG.C, 9 RESISTORS, LOW PROFILE, 10	VISHAY COMPONENTS	LC0-001-1003G
R11	24681/675	RESISTOR-NETWORK BUSSED, THICK-FILM, 100K 2% 1W 50V 100 ppm/DEG.C, 9 RESISTORS, LOW PROFILE, 10	VISHAY COMPONENTS	LC0-001-1003G
R12	24811/133	RESISTOR-FIXED METAL-FILM 22R1 +/- 1% 250mW 200V 50 ppm/DEG.C, SURFACE MOUNTED, SIZE MINI-MELF,	VISHAY COMPONENTS	SMM0204-22R1-1%50ppm

Cir. Ref.	MI part number	Description	Manufacturer	Manufacturer's part number

CCITT filter (optional) B13

When ordering, prefix circuit reference with B13.

	44830-136	Complete unit		Issue 003
C1	26386/940	CAPACITOR-FIXED CERAMIC 8.2nF +/-1% 50V NP0 MULTILAYER, SURFACE-MOUNTED, SIZE 1812, NICKEL	VISHAY COMPONENTS	VJ1812-A-822F-XAT
C2	26386/942	CAPACITOR-FIXED CERAMIC 15nF +/-1% 50V NP0 MULTILAYER, SURFACE-MOUNTED, SIZE 1812, NICKEL	VISHAY COMPONENTS	VJ1812-A-153F-XAT
C3	26386/934	CAPACITOR-FIXED CERAMIC 220pF +/-1% 50V NP0 MULTILAYER, SURFACE-MOUNTED, SIZE 0805, NICKEL	VISHAY COMPONENTS	VJ0805-A-221F-XAT
C4	26386/941	CAPACITOR-FIXED CERAMIC 10nF +/-1% 50V NP0 MULTILAYER, SURFACE-MOUNTED, SIZE 1812, NICKEL	VISHAY COMPONENTS	VJ1812-A-103F-XAT
C5	26386/936	CAPACITOR-FIXED CERAMIC 2.7nF +/-1% 50V NP0 MULTILAYER, SURFACE-MOUNTED, SIZE 1206, NICKEL	VISHAY COMPONENTS	VJ1206-A-272F-XAT
C6	26386/941	CAPACITOR-FIXED CERAMIC 10nF +/-1% 50V NP0 MULTILAYER, SURFACE-MOUNTED, SIZE 1812, NICKEL	VISHAY COMPONENTS	VJ1812-A-103F-XAT
C7	26386/936	CAPACITOR-FIXED CERAMIC 2.7nF +/-1% 50V NP0 MULTILAYER, SURFACE-MOUNTED, SIZE 1206, NICKEL	VISHAY COMPONENTS	VJ1206-A-272F-XAT
C8	26386/937	CAPACITOR-FIXED CERAMIC 3.9nF +/-1% 50V NP0 MULTILAYER, SURFACE-MOUNTED, SIZE 1210, NICKEL	VISHAY COMPONENTS	VJ1210-A-392F-XAT
C9	26386/930	CAPACITOR-FIXED CERAMIC 180pF +/-1% 50V NP0 MULTILAYER, SURFACE-MOUNTED, SIZE 0805, NICKEL	VISHAY COMPONENTS	VJ0805-A-181F-XAT
C10	26386/935	CAPACITOR-FIXED CERAMIC 1.5nF +/-1% 50V NP0 MULTILAYER, SURFACE-MOUNTED, SIZE 1206, NICKEL	VISHAY COMPONENTS	VJ1206-A-152F-XAT
C11	26386/939	CAPACITOR-FIXED CERAMIC 5.6nF +/-1% 50V NP0 MULTILAYER, SURFACE-MOUNTED, SIZE 1812, NICKEL	VISHAY COMPONENTS	VJ1812-A-562F-XAT
C12	26386/941	CAPACITOR-FIXED CERAMIC 10nF +/-1% 50V NP0 MULTILAYER, SURFACE-MOUNTED, SIZE 1812, NICKEL	VISHAY COMPONENTS	VJ1812-A-103F-XAT
C13	26386/942	CAPACITOR-FIXED CERAMIC 15nF +/-1% 50V NP0 MULTILAYER, SURFACE-MOUNTED, SIZE 1812, NICKEL	VISHAY COMPONENTS	VJ1812-A-153F-XAT
C14	26386/943	CAPACITOR-FIXED CERAMIC 22nF +/-1% 50V NP0 MULTILAYER, SURFACE-MOUNTED, SIZE 2220, NICKEL	VISHAY COMPONENTS	VJ2220-A-223F-XAT
C15	26386/943	CAPACITOR-FIXED CERAMIC 22nF +/-1% 50V NP0 MULTILAYER, SURFACE-MOUNTED, SIZE 2220, NICKEL	VISHAY COMPONENTS	VJ2220-A-223F-XAT
C16	26386/941	CAPACITOR-FIXED CERAMIC 10nF +/-1% 50V NP0 MULTILAYER, SURFACE-MOUNTED, SIZE 1812, NICKEL	VISHAY COMPONENTS	VJ1812-A-103F-XAT
C17	26386/941	CAPACITOR-FIXED CERAMIC 10nF +/-1% 50V NP0 MULTILAYER, SURFACE-MOUNTED, SIZE 1812, NICKEL	VISHAY COMPONENTS	VJ1812-A-103F-XAT
C18	26386/938	CAPACITOR-FIXED CERAMIC 4.7nF +/-1% 50V NP0 MULTILAYER, SURFACE-MOUNTED, SIZE 1210, NICKEL	VISHAY COMPONENTS	VJ1210-A-472F-XAT
C19	26386/938	CAPACITOR-FIXED CERAMIC 4.7nF +/-1% 50V NP0 MULTILAYER, SURFACE-MOUNTED, SIZE 1210, NICKEL	VISHAY COMPONENTS	VJ1210-A-472F-XAT
C20	26386/941	CAPACITOR-FIXED CERAMIC 10nF +/-1% 50V NP0 MULTILAYER, SURFACE-MOUNTED, SIZE 1812, NICKEL	VISHAY COMPONENTS	VJ1812-A-103F-XAT
C21 to C23	26451/004	CAPACITOR-FIXED ALUMINIUM 10uF +/-20% 35V ELECTROLYTIC, SURFACE-MOUNTED, SIZE 5.3 x 5.3mm,	DUBILIER CAPACITORS	DVC-10/35-T/R
C24	26386/930	CAPACITOR-FIXED CERAMIC 180pF +/-1% 50V NP0 MULTILAYER, SURFACE-MOUNTED, SIZE 0805, NICKEL	VISHAY COMPONENTS	VJ0805-A-181F-XAT
C25	26386/938	CAPACITOR-FIXED CERAMIC 4.7nF +/-1% 50V NP0 MULTILAYER, SURFACE-MOUNTED, SIZE 1210, NICKEL	VISHAY COMPONENTS	VJ1210-A-472F-XAT

Cir. Ref.	MI part number	Description	Manufacturer	Manufacturer's part number
CCITT filter (optional) B13 (contd.)				
IC1 to IC3	28461/385	IC-ANALOGUE OPERATIONAL AMP TL064... QUAD, JFET INPUT, LOW POWER, SLEW RATE 3.5V/uS TYP, SMALL	TEXAS INSTRUMENTS	TL064CD
R1	24811/206	RESISTOR-FIXED METAL-FILM 24K3 +/- 1% 250mW 200V 50 ppm/DEG.C, SURFACE MOUNTED, SIZE MINI-MELF,	VISHAY COMPONENTS	SMM0204-24K3-1%50ppm
R2	24811/229	RESISTOR-FIXED METAL-FILM 221K +/- 1% 250mW 200V 50 ppm/DEG.C, SURFACE MOUNTED, SIZE MINI-MELF,	VISHAY COMPONENTS	SMM0204-221K-1%50ppm
R3	24811/214	RESISTOR-FIXED METAL-FILM 51K1 +/- 1% 250mW 200V 50 ppm/DEG.C, SURFACE MOUNTED, SIZE MINI-MELF,	VISHAY COMPONENTS	SMM0204-51K1-1%50ppm
R4	24811/209	RESISTOR-FIXED METAL-FILM 33K2 +/- 1% 250mW 200V 50 ppm/DEG.C, SURFACE MOUNTED, SIZE MINI-MELF,	VISHAY COMPONENTS	SMM0204-33K2-1%50ppm
R5	24811/203	RESISTOR-FIXED METAL-FILM 18K2 +/- 1% 250mW 200V 50 ppm/DEG.C, SURFACE MOUNTED, SIZE MINI-MELF,	VISHAY COMPONENTS	SMM0204-18K2-1%50ppm
R6	24811/200	RESISTOR-FIXED METAL-FILM 13K +/- 1% 250mW 200V 50 ppm/DEG.C, SURFACE MOUNTED, SIZE MINI-MELF, (8mm	VISHAY COMPONENTS	SMM0204-13K-1%50ppm
R7	24811/200	RESISTOR-FIXED METAL-FILM 13K +/- 1% 250mW 200V 50 ppm/DEG.C, SURFACE MOUNTED, SIZE MINI-MELF, (8mm	VISHAY COMPONENTS	SMM0204-13K-1%50ppm
R8	24811/199	RESISTOR-FIXED METAL-FILM 12K1 +/- 1% 250mW 200V 50 ppm/DEG.C, SURFACE MOUNTED, SIZE MINI-MELF,	VISHAY COMPONENTS	SMM0204-12K1-1%50ppm
R9	24811/200	RESISTOR-FIXED METAL-FILM 13K +/- 1% 250mW 200V 50 ppm/DEG.C, SURFACE MOUNTED, SIZE MINI-MELF, (8mm	VISHAY COMPONENTS	SMM0204-13K-1%50ppm
R10	24811/200	RESISTOR-FIXED METAL-FILM 13K +/- 1% 250mW 200V 50 ppm/DEG.C, SURFACE MOUNTED, SIZE MINI-MELF, (8mm	VISHAY COMPONENTS	SMM0204-13K-1%50ppm
R11	24811/203	RESISTOR-FIXED METAL-FILM 18K2 +/- 1% 250mW 200V 50 ppm/DEG.C, SURFACE MOUNTED, SIZE MINI-MELF,	VISHAY COMPONENTS	SMM0204-18K2-1%50ppm
R12	24811/204	RESISTOR-FIXED METAL-FILM 20K +/- 1% 250mW 200V 50 ppm/DEG.C, SURFACE MOUNTED, SIZE MINI-MELF, (8mm	VISHAY COMPONENTS	SMM0204-20K-1%50ppm
R13	24811/210	RESISTOR-FIXED METAL-FILM 36K5 +/- 1% 250mW 200V 50 ppm/DEG.C, SURFACE MOUNTED, SIZE MINI-MELF,	VISHAY COMPONENTS	SMM0204-36K5-1%50ppm
R14	24811/212	RESISTOR-FIXED METAL-FILM 43K2 +/- 1% 250mW 200V 50 ppm/DEG.C, SURFACE MOUNTED, SIZE MINI-MELF,	VISHAY COMPONENTS	SMM0204-43K2-1%50ppm
R15	24811/212	RESISTOR-FIXED METAL-FILM 43K2 +/- 1% 250mW 200V 50 ppm/DEG.C, SURFACE MOUNTED, SIZE MINI-MELF,	VISHAY COMPONENTS	SMM0204-43K2-1%50ppm
R16	24811/218	RESISTOR-FIXED METAL-FILM 75K +/- 1% 250mW 200V 50 ppm/DEG.C, SURFACE MOUNTED, SIZE MINI-MELF, (8mm	VISHAY COMPONENTS	SMM0204-75K-1%50ppm
R17	24811/229	RESISTOR-FIXED METAL-FILM 221K +/- 1% 250mW 200V 50 ppm/DEG.C, SURFACE MOUNTED, SIZE MINI-MELF,	VISHAY COMPONENTS	SMM0204-221K-1%50ppm
R18	24811/170	RESISTOR-FIXED METAL-FILM 750R +/- 1% 250mW 200V 50 ppm/DEG.C, SURFACE MOUNTED, SIZE MINI-MELF,	VISHAY COMPONENTS	SMM0204-750R-1%50ppm
R19	24811/233	RESISTOR-FIXED METAL-FILM 332K +/- 1% 250mW 200V 50 ppm/DEG.C, SURFACE MOUNTED, SIZE MINI-MELF,	VISHAY COMPONENTS	SMM0204-332K-1%50ppm
R20	24811/180	RESISTOR-FIXED METAL-FILM 2K +/- 1% 250mW 200V 50 ppm/DEG.C, SURFACE MOUNTED, SIZE MINI-MELF, (8mm	VISHAY COMPONENTS	SMM0204-2K0-1%50ppm
R21	24811/218	RESISTOR-FIXED METAL-FILM 75K +/- 1% 250mW 200V 50 ppm/DEG.C, SURFACE MOUNTED, SIZE MINI-MELF, (8mm	VISHAY COMPONENTS	SMM0204-75K-1%50ppm
R22	24811/217	RESISTOR-FIXED METAL-FILM 68K1 +/- 1% 250mW 200V 50 ppm/DEG.C, SURFACE MOUNTED, SIZE MINI-MELF,	VISHAY COMPONENTS	SMM0204-68K1-1%50ppm
R23	24811/173	RESISTOR-FIXED METAL-FILM 1K +/- 1% 250mW 200V 50 ppm/DEG.C, SURFACE MOUNTED, SIZE MINI-MELF, (8mm	VISHAY COMPONENTS	SMM0204-1K0-1%-50ppm

Cir. Ref.	MI part number	Description	Manufacturer	Manufacturer's part number
CCITT filter (optional) B13 (contd.)				
R24	24811/209	RESISTOR-FIXED METAL-FILM 33K2 +/- 1% 250mW 200V 50 ppm/DEG.C, SURFACE MOUNTED, SIZE MINI-MELF,	VISHAY COMPONENTS	SMM0204-33K2-1%50ppm
R25	24811/221	RESISTOR-FIXED METAL-FILM 100K +/- 1% 250mW 200V 50 ppm/DEG.C, SURFACE MOUNTED, SIZE MINI-MELF,	VISHAY COMPONENTS	SMM0204-100K-1%50ppm
R26	24811/190	RESISTOR-FIXED METAL-FILM 5K11 +/- 1% 250mW 200V 50 ppm/DEG.C, SURFACE MOUNTED, SIZE MINI-MELF,	VISHAY COMPONENTS	SMM0204-5K11-1%50ppm
R27	24811/219	RESISTOR-FIXED METAL-FILM 82K5 +/- 1% 250mW 200V 50 ppm/DEG.C, SURFACE MOUNTED, SIZE MINI-MELF,	VISHAY COMPONENTS	SMM0204-82K5-1%50ppm
R28	24811/189	RESISTOR-FIXED METAL-FILM 4K75 +/- 1% 250mW 200V 50 ppm/DEG.C, SURFACE MOUNTED, SIZE MINI-MELF,	VISHAY COMPONENTS	SMM0204-4K75-1%50ppm
R29	24811/204	RESISTOR-FIXED METAL-FILM 20K +/- 1% 250mW 200V 50 ppm/DEG.C, SURFACE MOUNTED, SIZE MINI-MELF, (8mm	VISHAY COMPONENTS	SMM0204-20K-1%50ppm
R30	24811/190	RESISTOR-FIXED METAL-FILM 5K11 +/- 1% 250mW 200V 50 ppm/DEG.C, SURFACE MOUNTED, SIZE MINI-MELF,	VISHAY COMPONENTS	SMM0204-5K11-1%50ppm
R31	24811/191	RESISTOR-FIXED METAL-FILM 5K62 +/- 1% 250mW 200V 50 ppm/DEG.C, SURFACE MOUNTED, SIZE MINI-MELF,	VISHAY COMPONENTS	SMM0204-5K62-1%50ppm
R32	25711/659	RESISTOR-VARIABLE CERMET LINEAR, 1K 30% 100mW 50V 250 ppm/DEG.C, SINGLE-TURN, SURFACE-MOUNTED,	VISHAY COMPONENTS	ST-23A-102-B-W
R33	24811/221	RESISTOR-FIXED METAL-FILM 100K +/- 1% 250mW 200V 50 ppm/DEG.C, SURFACE MOUNTED, SIZE MINI-MELF,	VISHAY COMPONENTS	SMM0204-100K-1%50ppm

Cir. Ref.	MI part number	Description	Manufacturer	Manufacturer's part number

CMESS filter (optional) B13/1

When ordering, prefix circuit reference with B13/1.

	44830-176	Complete unit	Issue 001	
C1	26386/997	CAPACITOR-FIXED CERAMIC 470nF +/-10% 50V X7R, MULTILAYER, SURFACE-MOUNTED, SIZE 1812, NICKEL	PHILIPS	1812-2B-474-K9BB
C2	26386/941	CAPACITOR-FIXED CERAMIC 10nF +/-1% 50V NP0 MULTILAYER, SURFACE-MOUNTED, SIZE 1812, NICKEL	VISHAY COMPONENTS	VJ1812-A-103F-XAT
C3	26386/934	CAPACITOR-FIXED CERAMIC 220pF +/-1% 50V NP0 MULTILAYER, SURFACE-MOUNTED, SIZE 0805, NICKEL	VISHAY COMPONENTS	VJ0805-A-221F-XAT
C4	26386/941	CAPACITOR-FIXED CERAMIC 10nF +/-1% 50V NP0 MULTILAYER, SURFACE-MOUNTED, SIZE 1812, NICKEL	VISHAY COMPONENTS	VJ1812-A-103F-XAT
C5	26386/936	CAPACITOR-FIXED CERAMIC 2.7nF +/-1% 50V NP0 MULTILAYER, SURFACE-MOUNTED, SIZE 1206, NICKEL	VISHAY COMPONENTS	VJ1206-A-272F-XAT
C6	26386/941	CAPACITOR-FIXED CERAMIC 10nF +/-1% 50V NP0 MULTILAYER, SURFACE-MOUNTED, SIZE 1812, NICKEL	VISHAY COMPONENTS	VJ1812-A-103F-XAT
C7	26386/936	CAPACITOR-FIXED CERAMIC 2.7nF +/-1% 50V NP0 MULTILAYER, SURFACE-MOUNTED, SIZE 1206, NICKEL	VISHAY COMPONENTS	VJ1206-A-272F-XAT
C9	26386/930	CAPACITOR-FIXED CERAMIC 180pF +/-1% 50V NP0 MULTILAYER, SURFACE-MOUNTED, SIZE 0805, NICKEL	VISHAY COMPONENTS	VJ0805-A-181F-XAT
C10	26386/935	CAPACITOR-FIXED CERAMIC 1.5nF +/-1% 50V NP0 MULTILAYER, SURFACE-MOUNTED, SIZE 1206, NICKEL	VISHAY COMPONENTS	VJ1206-A-152F-XAT
C11	26386/937	CAPACITOR-FIXED CERAMIC 3.9nF +/-1% 50V NP0 MULTILAYER, SURFACE-MOUNTED, SIZE 1210, NICKEL	VISHAY COMPONENTS	VJ1210-A-392F-XAT
C12	26386/941	CAPACITOR-FIXED CERAMIC 10nF +/-1% 50V NP0 MULTILAYER, SURFACE-MOUNTED, SIZE 1812, NICKEL	VISHAY COMPONENTS	VJ1812-A-103F-XAT
C13 to C17	26386/942	CAPACITOR-FIXED CERAMIC 15nF +/-1% 50V NP0 MULTILAYER, SURFACE-MOUNTED, SIZE 1812, NICKEL	VISHAY COMPONENTS	VJ1812-A-153F-XAT
C18	26386/938	CAPACITOR-FIXED CERAMIC 4.7nF +/-1% 50V NP0 MULTILAYER, SURFACE-MOUNTED, SIZE 1210, NICKEL	VISHAY COMPONENTS	VJ1210-A-472F-XAT
C19	26386/938	CAPACITOR-FIXED CERAMIC 4.7nF +/-1% 50V NP0 MULTILAYER, SURFACE-MOUNTED, SIZE 1210, NICKEL	VISHAY COMPONENTS	VJ1210-A-472F-XAT
C20	26386/941	CAPACITOR-FIXED CERAMIC 10nF +/-1% 50V NP0 MULTILAYER, SURFACE-MOUNTED, SIZE 1812, NICKEL	VISHAY COMPONENTS	VJ1812-A-103F-XAT
C21 to C23	26451/004	CAPACITOR-FIXED ALUMINIUM 10uF +/-20% 35V ELECTROLYTIC, SURFACE-MOUNTED, SIZE 5.3 x 5.3mm,	DUBILIER CAPACITORS	DVC-10/35-T/R
C24	26386/782	CAPACITOR-FIXED CERAMIC 120pF +/-1% 50V NP0 MULTILAYER, SURFACE-MOUNTED, SIZE 0805, NICKEL	VISHAY COMPONENTS	VJ0805-A-121F-XAT
C25	26386/938	CAPACITOR-FIXED CERAMIC 4.7nF +/-1% 50V NP0 MULTILAYER, SURFACE-MOUNTED, SIZE 1210, NICKEL	VISHAY COMPONENTS	VJ1210-A-472F-XAT
C28	26386/934	CAPACITOR-FIXED CERAMIC 220pF +/-1% 50V NP0 MULTILAYER, SURFACE-MOUNTED, SIZE 0805, NICKEL	VISHAY COMPONENTS	VJ0805-A-221F-XAT
IC1 to IC3	28461/385	IC-ANALOGUE OPERATIONAL AMP TL064... QUAD, JFET INPUT, LOW POWER, SLEW RATE 3.5V/uS TYP, SMALL	TEXAS INSTRUMENTS	TL064CD

Cir. Ref.	MI part number	Description	Manufacturer	Manufacturer's part number
CMESS filter (optional) B13/1 (contd.)				
R2	24811/229	RESISTOR-FIXED METAL-FILM 221K +/- 1% 250mW 200V 50 ppm/DEG.C, SURFACE MOUNTED, SIZE MINI-MELF,	VISHAY COMPONENTS	SMM0204-221K-1%50ppm
R3	24811/212	RESISTOR-FIXED METAL-FILM 43K2 +/- 1% 250mW 200V 50 ppm/DEG.C, SURFACE MOUNTED, SIZE MINI-MELF,	VISHAY COMPONENTS	SMM0204-43K2-1%50ppm
R4	24811/209	RESISTOR-FIXED METAL-FILM 33K2 +/- 1% 250mW 200V 50 ppm/DEG.C, SURFACE MOUNTED, SIZE MINI-MELF,	VISHAY COMPONENTS	SMM0204-33K2-1%50ppm
R5	24811/209	RESISTOR-FIXED METAL-FILM 33K2 +/- 1% 250mW 200V 50 ppm/DEG.C, SURFACE MOUNTED, SIZE MINI-MELF,	VISHAY COMPONENTS	SMM0204-33K2-1%50ppm
R6	24811/198	RESISTOR-FIXED METAL-FILM 11K +/- 1% 250mW 200V 50 ppm/DEG.C, SURFACE MOUNTED, SIZE MINI-MELF, (8mm	VISHAY COMPONENTS	SMM0204-11K-1%50ppm
R7	24811/200	RESISTOR-FIXED METAL-FILM 13K +/- 1% 250mW 200V 50 ppm/DEG.C, SURFACE MOUNTED, SIZE MINI-MELF, (8mm	VISHAY COMPONENTS	SMM0204-13K-1%50ppm
R8	24811/196	RESISTOR-FIXED METAL-FILM 9K09 +/- 1% 250mW 200V 50 ppm/DEG.C, SURFACE MOUNTED, SIZE MINI-MELF,	VISHAY COMPONENTS	SMM0204-9K09-1%50ppm
R9	24811/197	RESISTOR-FIXED METAL-FILM 10K +/- 1% 250mW 200V 50 ppm/DEG.C, SURFACE MOUNTED, SIZE MINI-MELF, (8mm	VISHAY COMPONENTS	SMM0204-10K-1%50ppm
R10	24811/199	RESISTOR-FIXED METAL-FILM 12K1 +/- 1% 250mW 200V 50 ppm/DEG.C, SURFACE MOUNTED, SIZE MINI-MELF,	VISHAY COMPONENTS	SMM0204-12K1-1%50ppm
R11	24811/198	RESISTOR-FIXED METAL-FILM 11K +/- 1% 250mW 200V 50 ppm/DEG.C, SURFACE MOUNTED, SIZE MINI-MELF, (8mm	VISHAY COMPONENTS	SMM0204-11K-1%50ppm
R12	24811/207	RESISTOR-FIXED METAL-FILM 27K4 +/- 1% 250mW 200V 50 ppm/DEG.C, SURFACE MOUNTED, SIZE MINI-MELF,	VISHAY COMPONENTS	SMM0204-27K4-1%50ppm
R13	24811/207	RESISTOR-FIXED METAL-FILM 27K4 +/- 1% 250mW 200V 50 ppm/DEG.C, SURFACE MOUNTED, SIZE MINI-MELF,	VISHAY COMPONENTS	SMM0204-27K4-1%50ppm
R14	24811/210	RESISTOR-FIXED METAL-FILM 36K5 +/- 1% 250mW 200V 50 ppm/DEG.C, SURFACE MOUNTED, SIZE MINI-MELF,	VISHAY COMPONENTS	SMM0204-36K5-1%50ppm
R15	24811/207	RESISTOR-FIXED METAL-FILM 27K4 +/- 1% 250mW 200V 50 ppm/DEG.C, SURFACE MOUNTED, SIZE MINI-MELF,	VISHAY COMPONENTS	SMM0204-27K4-1%50ppm
R16	24811/217	RESISTOR-FIXED METAL-FILM 68K1 +/- 1% 250mW 200V 50 ppm/DEG.C, SURFACE MOUNTED, SIZE MINI-MELF,	VISHAY COMPONENTS	SMM0204-68K1-1%50ppm
R17	24811/229	RESISTOR-FIXED METAL-FILM 221K +/- 1% 250mW 200V 50 ppm/DEG.C, SURFACE MOUNTED, SIZE MINI-MELF,	VISHAY COMPONENTS	SMM0204-221K-1%50ppm
R18	24811/170	RESISTOR-FIXED METAL-FILM 750R +/- 1% 250mW 200V 50 ppm/DEG.C, SURFACE MOUNTED, SIZE MINI-MELF,	VISHAY COMPONENTS	SMM0204-750R-1%50ppm
R19	24811/173	RESISTOR-FIXED METAL-FILM 1K +/- 1% 250mW 200V 50 ppm/DEG.C, SURFACE MOUNTED, SIZE MINI-MELF, (8mm	VISHAY COMPONENTS	SMM0204-1K0-1%-50ppm
R21	24811/224	RESISTOR-FIXED METAL-FILM 130K +/- 1% 250mW 200V 50 ppm/DEG.C, SURFACE MOUNTED, SIZE MINI-MELF,	VISHAY COMPONENTS	SMM0204-130K-1%50ppm
R22	24811/219	RESISTOR-FIXED METAL-FILM 82K5 +/- 1% 250mW 200V 50 ppm/DEG.C, SURFACE MOUNTED, SIZE MINI-MELF,	VISHAY COMPONENTS	SMM0204-82K5-1%50ppm
R23	24811/196	RESISTOR-FIXED METAL-FILM 9K09 +/- 1% 250mW 200V 50 ppm/DEG.C, SURFACE MOUNTED, SIZE MINI-MELF,	VISHAY COMPONENTS	SMM0204-9K09-1%50ppm
R24	24811/201	RESISTOR-FIXED METAL-FILM 15K +/- 1% 250mW 200V 50 ppm/DEG.C, SURFACE MOUNTED, SIZE MINI-MELF, (8mm	VISHAY COMPONENTS	SMM0204-15K-1%50ppm
R25	24811/221	RESISTOR-FIXED METAL-FILM 100K +/- 1% 250mW 200V 50 ppm/DEG.C, SURFACE MOUNTED, SIZE MINI-MELF,	VISHAY COMPONENTS	SMM0204-100K-1%50ppm
R26	24811/190	RESISTOR-FIXED METAL-FILM 5K11 +/- 1% 250mW 200V 50 ppm/DEG.C, SURFACE MOUNTED, SIZE MINI-MELF,	VISHAY COMPONENTS	SMM0204-5K11-1%50ppm
R27	24811/219	RESISTOR-FIXED METAL-FILM 82K5 +/- 1% 250mW 200V 50 ppm/DEG.C, SURFACE MOUNTED, SIZE MINI-MELF,	VISHAY COMPONENTS	SMM0204-82K5-1%50ppm
R28	24811/189	RESISTOR-FIXED METAL-FILM 4K75 +/- 1% 250mW 200V 50 ppm/DEG.C, SURFACE MOUNTED, SIZE MINI-MELF,	VISHAY COMPONENTS	SMM0204-4K75-1%50ppm

Cir. Ref.	MI part number	Description	Manufacturer	Manufacturer's part number
CMESS filter (optional) B13/1 (contd.)				
R29	24811/211	RESISTOR-FIXED METAL-FILM 39K2 +/- 1% 250mW 200V 50 ppm/DEG.C, SURFACE MOUNTED, SIZE MINI-MELF,	VISHAY COMPONENTS	SMM0204-39K2-1%50ppm
R30	24811/189	RESISTOR-FIXED METAL-FILM 4K75 +/- 1% 250mW 200V 50 ppm/DEG.C, SURFACE MOUNTED, SIZE MINI-MELF,	VISHAY COMPONENTS	SMM0204-4K75-1%50ppm
R31	24811/188	RESISTOR-FIXED METAL-FILM 4K32 +/- 1% 250mW 200V 50 ppm/DEG.C, SURFACE MOUNTED, SIZE MINI-MELF,	VISHAY COMPONENTS	SMM0204-4K32-1%50ppm
R32	25711/659	RESISTOR-VARIABLE CERMET LINEAR, 1K 30% 100mW 50V 250 ppm/DEG.C, SINGLE-TURN, SURFACE-MOUNTED,	VISHAY COMPONENTS	ST-23A-102-B-W
R33	24811/221	RESISTOR-FIXED METAL-FILM 100K +/- 1% 250mW 200V 50 ppm/DEG.C, SURFACE MOUNTED, SIZE MINI-MELF,	VISHAY COMPONENTS	SMM0204-100K-1%50ppm

Clr. Ref.	MI part number	Description	Manufacturer	Manufacturer's part number

Keyboard and front panel

This is only supplied as a complete assembly. The display module is a separate item.

	46662/603	Complete unit	Issue 004

† The keyboard carries the printed legend, 'communications service monitor 2947'. A self adhesive label produced in matching colours to the keyboard, and carrying the legend, 'communications service monitor 2948' is available as part number 31739-987.

Display assembly

This is only supplied as a complete assembly, including the supply invertor for the back-light. The keyboard and front panel assembly is a separate item.

	28624/308	Complete unit	Issue 005

Power supply module

This assembly is only supplied as a complete assembly.

	44991/179	Complete unit	Issue 002

Cir. Ref.	MI part number	Description	Manufacturer	Manufacturer's part number

RF generator control C1

When ordering, prefix circuit reference with 1.

	44830-113	Complete unit	Issue 003	
C1	26386/832	CAPACITOR-FIXED CERAMIC 470pF +/-5% 50V NPO MULTILAYER, SURFACE-MOUNTED, SIZE 0805, NICKEL	ROHM ELECTRONICS LTD	MCH21-5A-471-JP
C2	26386/777	CAPACITOR-FIXED CERAMIC 47nF +/-20% 63V X7R/2C1, MULTILAYER, SURFACE-MOUNTED, SIZE 1206, NICKEL	PHILIPS	1206-2R-473-K9-BBC
C3 to C5	26386/832	CAPACITOR-FIXED CERAMIC 470pF +/-5% 50V NPO MULTILAYER, SURFACE-MOUNTED, SIZE 0805, NICKEL	ROHM ELECTRONICS LTD	MCH21-5A-471-JP
C6	26386/777	CAPACITOR-FIXED CERAMIC 47nF +/-20% 63V X7R/2C1, MULTILAYER, SURFACE-MOUNTED, SIZE 1206, NICKEL	PHILIPS	1206-2R-473-K9-BBC
C7	26386/832	CAPACITOR-FIXED CERAMIC 470pF +/-5% 50V NPO MULTILAYER, SURFACE-MOUNTED, SIZE 0805, NICKEL	ROHM ELECTRONICS LTD	MCH21-5A-471-JP
C8	26386/832	CAPACITOR-FIXED CERAMIC 470pF +/-5% 50V NPO MULTILAYER, SURFACE-MOUNTED, SIZE 0805, NICKEL	ROHM ELECTRONICS LTD	MCH21-5A-471-JP
C9	26386/777	CAPACITOR-FIXED CERAMIC 47nF +/-20% 63V X7R/2C1, MULTILAYER, SURFACE-MOUNTED, SIZE 1206, NICKEL	PHILIPS	1206-2R-473-K9-BBC
C10	26386/832	CAPACITOR-FIXED CERAMIC 470pF +/-5% 50V NPO MULTILAYER, SURFACE-MOUNTED, SIZE 0805, NICKEL	ROHM ELECTRONICS LTD	MCH21-5A-471-JP
C15	26451/010	CAPACITOR-FIXED ALUMINIUM 100uF +/-20% 6.3V ELECTROLYTIC, SURFACE-MOUNTED, SIZE 6.6 x 6.6mm,	PANASONIC INDUSTRIAL	ECE-V-0JA-101P
C16	26451/010	CAPACITOR-FIXED ALUMINIUM 100uF +/-20% 6.3V ELECTROLYTIC, SURFACE-MOUNTED, SIZE 6.6 x 6.6mm,	PANASONIC INDUSTRIAL	ECE-V-0JA-101P
C17	26386/875	CAPACITOR-FIXED CERAMIC 10nF +/-10% 50V X7R/2C1, MULTILAYER, SURFACE-MOUNTED, SIZE 0805, NICKEL	ROHM ELECTRONICS LTD	MCH21-5C-103-KP
C18	26386/828	CAPACITOR-FIXED CERAMIC 220pF +/-5% 50V NP0 MULTILAYER, SURFACE-MOUNTED, SIZE 0805, NICKEL	ROHM ELECTRONICS LTD	MCH21-5A-221-JP
C19	26386/832	CAPACITOR-FIXED CERAMIC 470pF +/-5% 50V NPO MULTILAYER, SURFACE-MOUNTED, SIZE 0805, NICKEL	ROHM ELECTRONICS LTD	MCH21-5A-471-JP
C20	26386/777	CAPACITOR-FIXED CERAMIC 47nF +/-20% 63V X7R/2C1, MULTILAYER, SURFACE-MOUNTED, SIZE 1206, NICKEL	PHILIPS	1206-2R-473-K9-BBC
C21	26386/777	CAPACITOR-FIXED CERAMIC 47nF +/-20% 63V X7R/2C1, MULTILAYER, SURFACE-MOUNTED, SIZE 1206, NICKEL	PHILIPS	1206-2R-473-K9-BBC
C22	26386/832	CAPACITOR-FIXED CERAMIC 470pF +/-5% 50V NPO MULTILAYER, SURFACE-MOUNTED, SIZE 0805, NICKEL	ROHM ELECTRONICS LTD	MCH21-5A-471-JP
C24	26386/777	CAPACITOR-FIXED CERAMIC 47nF +/-20% 63V X7R/2C1, MULTILAYER, SURFACE-MOUNTED, SIZE 1206, NICKEL	PHILIPS	1206-2R-473-K9-BBC
C34	26421/153	CAPACITOR-FIXED ALUMINIUM 470uF +/-20% 6.3V ELECTROLYTIC, RADIAL, 5mm PWP, 9mm MAX BODY DIA,	VISHAY COMPONENTS	EKS-00-CC-347-C-C0
C35	26386/777	CAPACITOR-FIXED CERAMIC 47nF +/-20% 63V X7R/2C1, MULTILAYER, SURFACE-MOUNTED, SIZE 1206, NICKEL	PHILIPS	1206-2R-473-K9-BBC
C36	26386/832	CAPACITOR-FIXED CERAMIC 470pF +/-5% 50V NPO MULTILAYER, SURFACE-MOUNTED, SIZE 0805, NICKEL	ROHM ELECTRONICS LTD	MCH21-5A-471-JP
C37	26386/832	CAPACITOR-FIXED CERAMIC 470pF +/-5% 50V NPO MULTILAYER, SURFACE-MOUNTED, SIZE 0805, NICKEL	ROHM ELECTRONICS LTD	MCH21-5A-471-JP
C38 to C40	26386/777	CAPACITOR-FIXED CERAMIC 47nF +/-20% 63V X7R/2C1, MULTILAYER, SURFACE-MOUNTED, SIZE 1206, NICKEL	PHILIPS	1206-2R-473-K9-BBC

Cir. Ref.	MI part number	Description	Manufacturer	Manufacturer's part number
RF generator control C1 (contd.)				
C45	26386/832	CAPACITOR-FIXED CERAMIC 470pF +/-5% 50V NPO MULTILAYER, SURFACE-MOUNTED, SIZE 0805, NICKEL	ROHM ELECTRONICS LTD	MCH21-5A-471-JP
C46	26386/863	CAPACITOR-FIXED CERAMIC 1nF +/-10% 50V X7R/2C1, MULTILAYER, SURFACE-MOUNTED, SIZE 0805, NICKEL	ROHM ELECTRONICS LTD	MCH21-5C-102-KP
C47	26386/832	CAPACITOR-FIXED CERAMIC 470pF +/-5% 50V NPO MULTILAYER, SURFACE-MOUNTED, SIZE 0805, NICKEL	ROHM ELECTRONICS LTD	MCH21-5A-471-JP
C48	26386/863	CAPACITOR-FIXED CERAMIC 1nF +/-10% 50V X7R/2C1, MULTILAYER, SURFACE-MOUNTED, SIZE 0805, NICKEL	ROHM ELECTRONICS LTD	MCH21-5C-102-KP
C49	26386/863	CAPACITOR-FIXED CERAMIC 1nF +/-10% 50V X7R/2C1, MULTILAYER, SURFACE-MOUNTED, SIZE 0805, NICKEL	ROHM ELECTRONICS LTD	MCH21-5C-102-KP
C50	26386/832	CAPACITOR-FIXED CERAMIC 470pF +/-5% 50V NPO MULTILAYER, SURFACE-MOUNTED, SIZE 0805, NICKEL	ROHM ELECTRONICS LTD	MCH21-5A-471-JP
C51	26386/863	CAPACITOR-FIXED CERAMIC 1nF +/-10% 50V X7R/2C1, MULTILAYER, SURFACE-MOUNTED, SIZE 0805, NICKEL	ROHM ELECTRONICS LTD	MCH21-5C-102-KP
C52 to C57	26386/777	CAPACITOR-FIXED CERAMIC 47nF +/-20% 63V X7R/2C1, MULTILAYER, SURFACE-MOUNTED, SIZE 1206, NICKEL	PHILIPS	1206-2R-473-K9-BBC
C58	26386/816	CAPACITOR-FIXED CERAMIC 22pF +/-5% 50V NPO MULTILAYER, SURFACE-MOUNTED, SIZE 0805, NICKEL	ROHM ELECTRONICS LTD	MCH21-5A-220-JP
C60	26451/010	CAPACITOR-FIXED ALUMINIUM 100uF +/-20% 6.3V ELECTROLYTIC, SURFACE-MOUNTED, SIZE 6.6 x 6.6mm,	PANASONIC INDUSTRIAL	ECE-V-0JA-101P
C65	26386/777	CAPACITOR-FIXED CERAMIC 47nF +/-20% 63V X7R/2C1, MULTILAYER, SURFACE-MOUNTED, SIZE 1206, NICKEL	PHILIPS	1206-2R-473-K9-BBC
C66	26386/777	CAPACITOR-FIXED CERAMIC 47nF +/-20% 63V X7R/2C1, MULTILAYER, SURFACE-MOUNTED, SIZE 1206, NICKEL	PHILIPS	1206-2R-473-K9-BBC
C67	26451/009	CAPACITOR-FIXED ALUMINIUM 47uF +/-20% 16V ELECTROLYTIC, SURFACE-MOUNTED, SIZE 6.6 x 6.6mm,	PANASONIC INDUSTRIAL	ECE-V-1CA-470P
C68	26386/777	CAPACITOR-FIXED CERAMIC 47nF +/-20% 63V X7R/2C1, MULTILAYER, SURFACE-MOUNTED, SIZE 1206, NICKEL	PHILIPS	1206-2R-473-K9-BBC
C69	26386/777	CAPACITOR-FIXED CERAMIC 47nF +/-20% 63V X7R/2C1, MULTILAYER, SURFACE-MOUNTED, SIZE 1206, NICKEL	PHILIPS	1206-2R-473-K9-BBC
C70	26451/009	CAPACITOR-FIXED ALUMINIUM 47uF +/-20% 16V ELECTROLYTIC, SURFACE-MOUNTED, SIZE 6.6 x 6.6mm,	PANASONIC INDUSTRIAL	ECE-V-1CA-470P
C71	26386/777	CAPACITOR-FIXED CERAMIC 47nF +/-20% 63V X7R/2C1, MULTILAYER, SURFACE-MOUNTED, SIZE 1206, NICKEL	PHILIPS	1206-2R-473-K9-BBC
C72	26386/777	CAPACITOR-FIXED CERAMIC 47nF +/-20% 63V X7R/2C1, MULTILAYER, SURFACE-MOUNTED, SIZE 1206, NICKEL	PHILIPS	1206-2R-473-K9-BBC
C73	26451/009	CAPACITOR-FIXED ALUMINIUM 47uF +/-20% 16V ELECTROLYTIC, SURFACE-MOUNTED, SIZE 6.6 x 6.6mm,	PANASONIC INDUSTRIAL	ECE-V-1CA-470P
D1	28383/910	DIODE SMALL-SIGNAL, BAS28... DUAL, 330mW 75V 250mA ELECTRICALLY ISOLATED, MARKING CODE A61 OR JT,	PHILIPS	BAS28
D2	28371/412	DIODE ZENER, BZX84-C5V1... 250mW 5.1V 5% 250mA MARKING CODE Z2, SURFACE MOUNTED, SOT-23, (8mm	PHILIPS	BZX84-C5V1
D3	28371/412	DIODE ZENER, BZX84-C5V1... 250mW 5.1V 5% 250mA MARKING CODE Z2, SURFACE MOUNTED, SOT-23, (8mm	PHILIPS	BZX84-C5V1
D4 to D6	28383/910	DIODE SMALL-SIGNAL, BAS28... DUAL, 330mW 75V 250mA ELECTRICALLY ISOLATED, MARKING CODE A61 OR JT,	PHILIPS	BAS28
D7	28349/032	DIODE SMALL-SIGNAL, SCHOTTKY, HSMS-2820... 8V 1pF 340mVf @ 1mA, MARKNG CODE C0, LOW PROFILE, SURFACE	HEWLETT-PACKARD	HSMS-2820-L31
D8	28349/032	DIODE SMALL-SIGNAL, SCHOTTKY, HSMS-2820... 8V 1pF 340mVf @ 1mA, MARKNG CODE C0, LOW PROFILE, SURFACE	HEWLETT-PACKARD	HSMS-2820-L31

Cir. Ref.	MI part number	Description	Manufacturer	Manufacturer's part number
RF generator control C1 (contd.)				
IC1	28461/454	IC-ANALOGUE MICROWAVE-AMP MSA-0786... 4V 22mA GAIN 12.5dB @ 1GHz, 3dB BANDWIDTH DC-2GHz, BIPOLAR, 4	HEWLETT-PACKARD	MSA-0786-TR1
IC2	28469/577	IC-DIGITAL DIVIDER SP4902... DIVIDE BY 2, 2.5GHz, PRESCALER, ECL, 8 PIN, SMALL-OUTLINE.		
IC3	28461/454	IC-ANALOGUE MICROWAVE-AMP MSA-0786... 4V 22mA GAIN 12.5dB @ 1GHz, 3dB BANDWIDTH DC-2GHz, BIPOLAR, 4	HEWLETT-PACKARD	MSA-0786-TR1
IC4	28461/510	IC-ANALOGUE OPERATIONAL AMP MC33284... QUAD, JFET INPUT, LOW NOISE, SLEW RATE 8V/uS MIN, GAIN	NAT. SEMICONDUCTOR	LM837M
IC5	28462/638	IC-DIGITAL FLIP-FLOP/D-TYPE 74HC74... 2 BIT, DUAL, POS EDGE TRIGGER, PLUS SET & CLEAR, CMOS-H/SPEED,	PHILIPS	74HC74D
IC6	28462/157	IC-DIGITAL FLIP-FLOP/D-TYPE 74HC377... OCTAL, POS EDGE TRIGGER WITH DATA ENABLE, CMOS-H/SPEED, 20	PHILIPS	74HC377D
IC7	28462/157	IC-DIGITAL FLIP-FLOP/D-TYPE 74HC377... OCTAL, POS EDGE TRIGGER WITH DATA ENABLE, CMOS-H/SPEED, 20	PHILIPS	74HC377D
IC9	28469/621	IC-DIGITAL ARRAY-LOGIC L5A1579... FRACTIONAL N CONTROL CHIP, 28 BIT BINARY, TO MI CUSTOM SPEC,	LSI LOGIC LTD	L5A1579
IC10	28469/568	IC-DIGITAL DIVIDER SP8400... DIVIDE BY 8/9, 1.5GHz PRESCALER, PHASE NOISE < 160dBc/Hz, 3 BIT A & 9	GEC PLESSEY SEMICOND	SP8400-KG-MPES
IC11	28461/768	IC-ANALOGUE VOLTAGE-REFERENCE LM336... SINGLE, 5V 5mA 2% ACCURACY, 300uW, MONOLITHIC, 3 PIN, TO-92.	NAT. SEMICONDUCTOR	LM336BZ-5.0
IC12	28466/414	IC-DIGITAL EXCLUSIVE-OR 74HC86... 2 INPUT, QUAD, CMOS-H/SPEED, 14 PIN, SMALL-OUTLINE.	PHILIPS	74HC86D
L1	23642/519	INDUCTOR-FIXED 0.068uH +/- 5% EPOXY-MOULD, 450mA 0R36 MAX, 27 Q @ 100 MHz, 1K MHz SRF, SURFACE	MEGGITT ELECTRONICS	3612-T-068-J
L2	23642/519	INDUCTOR-FIXED 0.068uH +/- 5% EPOXY-MOULD, 450mA 0R36 MAX, 27 Q @ 100 MHz, 1K MHz SRF, SURFACE	MEGGITT ELECTRONICS	3612-T-068-J
L3	23642/512	INDUCTOR-FIXED 22uH +/- 5% EPOXY-MOULD, 110mA 3R7 MAX, 30 Q @ 2.5 MHz, 25 MHz SRF, SURFACE MOUNTED,	MEGGITT ELECTRONICS	3612-T-220-J
L4	23642/716	INDUCTOR-FIXED 3.3uH +/- 5% EPOXY-MOULD, 260mA 1R2 MAX, 30 Q @ 7.96 MHz, 60 MHz SRF, SURFACE MOUNTED,	MEGGITT ELECTRONICS	3612-T-3R3-J
L5	23642/512	INDUCTOR-FIXED 22uH +/- 5% EPOXY-MOULD, 110mA 3R7 MAX, 30 Q @ 2.5 MHz, 25 MHz SRF, SURFACE MOUNTED,	MEGGITT ELECTRONICS	3612-T-220-J
R1	24811/928	RESISTOR-FIXED METAL-FILM 121R +/- 1% 250mW 200V 50 ppm/DEG.C, LOW-INDUCTANCE, SURFACE MOUNTED,	VISHAY COMPONENTS	SMM0204-HF-121R-1%
R2	24811/909	RESISTOR-FIXED METAL-FILM 51R1 +/- 1% 250mW 200V 50 ppm/DEG.C, LOW-INDUCTANCE, SURFACE MOUNTED,	VISHAY COMPONENTS	SMM0204-HF-51R1-1%
R3	24811/928	RESISTOR-FIXED METAL-FILM 121R +/- 1% 250mW 200V 50 ppm/DEG.C, LOW-INDUCTANCE, SURFACE MOUNTED,	VISHAY COMPONENTS	SMM0204-HF-121R-1%
R4	24811/153	RESISTOR-FIXED METAL-FILM 150R +/- 1% 250mW 200V 50 ppm/DEG.C, SURFACE MOUNTED, SIZE MINI-MELF,	VISHAY COMPONENTS	SMM0204-150R-1%50ppm
R5	24811/153	RESISTOR-FIXED METAL-FILM 150R +/- 1% 250mW 200V 50 ppm/DEG.C, SURFACE MOUNTED, SIZE MINI-MELF,	VISHAY COMPONENTS	SMM0204-150R-1%50ppm
R6	24811/909	RESISTOR-FIXED METAL-FILM 51R1 +/- 1% 250mW 200V 50 ppm/DEG.C, LOW-INDUCTANCE, SURFACE MOUNTED,	VISHAY COMPONENTS	SMM0204-HF-51R1-1%

Cir. Ref.	MI part number	Description	Manufacturer	Manufacturer's part number
RF generator control C1 (contd.)				
R7	24811/153	RESISTOR-FIXED METAL-FILM 150R +/- 1% 250mW 200V 50 ppm/DEG.C, SURFACE MOUNTED, SIZE MINI-MELF,	VISHAY COMPONENTS	SMM0204-150R-1%50ppm
R8	24811/153	RESISTOR-FIXED METAL-FILM 150R +/- 1% 250mW 200V 50 ppm/DEG.C, SURFACE MOUNTED, SIZE MINI-MELF,	VISHAY COMPONENTS	SMM0204-150R-1%50ppm
R15	24811/190	RESISTOR-FIXED METAL-FILM 5K11 +/- 1% 250mW 200V 50 ppm/DEG.C, SURFACE MOUNTED, SIZE MINI-MELF,	VISHAY COMPONENTS	SMM0204-5K11-1%50ppm
R16	24811/174	RESISTOR-FIXED METAL-FILM 1K1 +/- 1% 250mW 200V 50 ppm/DEG.C, SURFACE MOUNTED, SIZE MINI-MELF, (8mm	VISHAY COMPONENTS	SMM0204-1K1-1%50ppm
R17	24811/180	RESISTOR-FIXED METAL-FILM 2K +/- 1% 250mW 200V 50 ppm/DEG.C, SURFACE MOUNTED, SIZE MINI-MELF, (8mm	VISHAY COMPONENTS	SMM0204-2K0-1%50ppm
R18	24811/183	RESISTOR-FIXED METAL-FILM 2K74 +/- 1% 250mW 200V 50 ppm/DEG.C, SURFACE MOUNTED, SIZE MINI-MELF,	VISHAY COMPONENTS	SMM0204-2K74-1%50ppm
R19	24811/183	RESISTOR-FIXED METAL-FILM 2K74 +/- 1% 250mW 200V 50 ppm/DEG.C, SURFACE MOUNTED, SIZE MINI-MELF,	VISHAY COMPONENTS	SMM0204-2K74-1%50ppm
R20	24811/173	RESISTOR-FIXED METAL-FILM 1K +/- 1% 250mW 200V 50 ppm/DEG.C, SURFACE MOUNTED, SIZE MINI-MELF, (8mm	VISHAY COMPONENTS	SMM0204-1K0-1%-50ppm
R21	24811/173	RESISTOR-FIXED METAL-FILM 1K +/- 1% 250mW 200V 50 ppm/DEG.C, SURFACE MOUNTED, SIZE MINI-MELF, (8mm	VISHAY COMPONENTS	SMM0204-1K0-1%-50ppm
R22	24811/197	RESISTOR-FIXED METAL-FILM 10K +/- 1% 250mW 200V 50 ppm/DEG.C, SURFACE MOUNTED, SIZE MINI-MELF, (8mm	VISHAY COMPONENTS	SMM0204-10K-1%50ppm
R23	24811/189	RESISTOR-FIXED METAL-FILM 4K75 +/- 1% 250mW 200V 50 ppm/DEG.C, SURFACE MOUNTED, SIZE MINI-MELF,	VISHAY COMPONENTS	SMM0204-4K75-1%50ppm
R24	24811/189	RESISTOR-FIXED METAL-FILM 4K75 +/- 1% 250mW 200V 50 ppm/DEG.C, SURFACE MOUNTED, SIZE MINI-MELF,	VISHAY COMPONENTS	SMM0204-4K75-1%50ppm
R25 to R27	24811/173	RESISTOR-FIXED METAL-FILM 1K +/- 1% 250mW 200V 50 ppm/DEG.C, SURFACE MOUNTED, SIZE MINI-MELF, (8mm	VISHAY COMPONENTS	SMM0204-1K0-1%-50ppm
R30	24811/197	RESISTOR-FIXED METAL-FILM 10K +/- 1% 250mW 200V 50 ppm/DEG.C, SURFACE MOUNTED, SIZE MINI-MELF, (8mm	VISHAY COMPONENTS	SMM0204-10K-1%50ppm
R31	24811/217	RESISTOR-FIXED METAL-FILM 68K1 +/- 1% 250mW 200V 50 ppm/DEG.C, SURFACE MOUNTED, SIZE MINI-MELF,	VISHAY COMPONENTS	SMM0204-68K1-1%50ppm
R35	24681/527	RESISTOR-NETWORK BUSSED, THICK-FILM, 4K7 2% 600mW 25V 200 ppm/DEG.C, 15 RESISTORS, SURFACE MOUNTED,	VISHAY COMPONENTS	SOMC16-01-472-G-TUBE
R36	24811/173	RESISTOR-FIXED METAL-FILM 1K +/- 1% 250mW 200V 50 ppm/DEG.C, SURFACE MOUNTED, SIZE MINI-MELF, (8mm	VISHAY COMPONENTS	SMM0204-1K0-1%-50ppm
R45	24811/909	RESISTOR-FIXED METAL-FILM 51R1 +/- 1% 250mW 200V 50 ppm/DEG.C, LOW-INDUCTANCE, SURFACE MOUNTED,	VISHAY COMPONENTS	SMM0204-HF-51R1-1%
R46 to R48	24811/173	RESISTOR-FIXED METAL-FILM 1K +/- 1% 250mW 200V 50 ppm/DEG.C, SURFACE MOUNTED, SIZE MINI-MELF, (8mm	VISHAY COMPONENTS	SMM0204-1K0-1%-50ppm
R49	24681/536	RESISTOR-NETWORK ISOLATED, THICK-FILM, 1K 2% 600mW 50V 200 ppm/DEG.C, 8 RESISTORS, SURFACE MOUNTED,	VISHAY COMPONENTS	SOMC16-03-102-G-TUBE
R50	24811/173	RESISTOR-FIXED METAL-FILM 1K +/- 1% 250mW 200V 50 ppm/DEG.C, SURFACE MOUNTED, SIZE MINI-MELF, (8mm	VISHAY COMPONENTS	SMM0204-1K0-1%-50ppm
R51	24811/161	RESISTOR-FIXED METAL-FILM 332R +/- 1% 250mW 200V 50 ppm/DEG.C, SURFACE MOUNTED, SIZE MINI-MELF,	VISHAY COMPONENTS	SMM0204-332R-1%50ppm
R52	24811/161	RESISTOR-FIXED METAL-FILM 332R +/- 1% 250mW 200V 50 ppm/DEG.C, SURFACE MOUNTED, SIZE MINI-MELF,	VISHAY COMPONENTS	SMM0204-332R-1%50ppm
R53	24811/909	RESISTOR-FIXED METAL-FILM 51R1 +/- 1% 250mW 200V 50 ppm/DEG.C, LOW-INDUCTANCE, SURFACE MOUNTED,	VISHAY COMPONENTS	SMM0204-HF-51R1-1%
R54	24811/909	RESISTOR-FIXED METAL-FILM 51R1 +/- 1% 250mW 200V 50 ppm/DEG.C, LOW-INDUCTANCE, SURFACE MOUNTED,	VISHAY COMPONENTS	SMM0204-HF-51R1-1%
R55	24811/153	RESISTOR-FIXED METAL-FILM 150R +/- 1% 250mW 200V 50 ppm/DEG.C, SURFACE MOUNTED, SIZE MINI-MELF,	VISHAY COMPONENTS	SMM0204-150R-1%50ppm

Cir. Ref.	MI part number	Description	Manufacturer	Manufacturer's part number
RF generator control C1 (contd.)				
R56	24811/174	RESISTOR-FIXED METAL-FILM 1K1 +/- 1% 250mW 200V 50 ppm/DEG.C, SURFACE MOUNTED, SIZE MINI-MELF, (8mm	VISHAY COMPONENTS	SMM0204-1K1-1%50ppm
R57	24811/161	RESISTOR-FIXED METAL-FILM 332R +/- 1% 250mW 200V 50 ppm/DEG.C, SURFACE MOUNTED, SIZE MINI-MELF,	VISHAY COMPONENTS	SMM0204-332R-1%50ppm
R58	24811/161	RESISTOR-FIXED METAL-FILM 332R +/- 1% 250mW 200V 50 ppm/DEG.C, SURFACE MOUNTED, SIZE MINI-MELF,	VISHAY COMPONENTS	SMM0204-332R-1%50ppm
R59	24811/125	RESISTOR-FIXED METAL-FILM 10R +/- 1% 250mW 200V 50 ppm/DEG.C, SURFACE MOUNTED, SIZE MINI-MELF, (8mm	VISHAY COMPONENTS	SMM0204-10R-1%-50ppm
R60	24811/125	RESISTOR-FIXED METAL-FILM 10R +/- 1% 250mW 200V 50 ppm/DEG.C, SURFACE MOUNTED, SIZE MINI-MELF, (8mm	VISHAY COMPONENTS	SMM0204-10R-1%-50ppm
R61	24811/181	RESISTOR-FIXED METAL-FILM 2K21 +/- 1% 250mW 200V 50 ppm/DEG.C, SURFACE MOUNTED, SIZE MINI-MELF,	VISHAY COMPONENTS	SMM0204-2K21-1%50ppm
R62 to R64	24811/197	RESISTOR-FIXED METAL-FILM 10K +/- 1% 250mW 200V 50 ppm/DEG.C, SURFACE MOUNTED, SIZE MINI-MELF, (8mm	VISHAY COMPONENTS	SMM0204-10K-1%50ppm
TR1 to TR3	28457/850	TRANSISTOR NPN BIPOLAR FMMT2369... 40V 600MHz 300mW 500mA 40hFE MIN @ 10mA, MARKING CODE *1J,	PHILIPS	PMBT2369
TR4	28457/852	TRANSISTOR PNP BIPOLAR BSR15... 40V 200MHz 300mW 600mA MARKING CODE CH/T7p, SURFACE MOUNTED,	PHILIPS	BSR15
TR5	28453/829	TRANSISTOR NPN BIPOLAR BC848B... 30V 200MHz 200mW 100mA 290hFE @ 2mA, NOISE 2dB @ 1KHz, MARKING CODE	PHILIPS	BC848B

Cir. Ref.	MI part number	Description	Manufacturer	Manufacturer's part number

RF oscillator C2

When ordering, prefix circuit reference with C2.

	44830-104	Complete unit		Issue 003
C1	26421/151	CAPACITOR-FIXED ALUMINIUM 100uF +/-20% 35V ELECTROLYTIC, RADIAL, 5mm PWP, 9mm MAX BODY DIA,	VISHAY COMPONENTS	EKS-00-CC-310-G-C0
C2 to C4	26421/112	CAPACITOR-FIXED ALUMINIUM 10uF +/-20% 35V ELECTROLYTIC, RADIAL, 5mm PWP, (TAPED).	PANASONIC INDUSTRIAL	ECE-A-1V-KA-100-B
C5	26421/152	CAPACITOR-FIXED ALUMINIUM 220uF +/-20% 16V ELECTROLYTIC, RADIAL, 5mm PWP, 9mm MAX BODY DIA,	VISHAY COMPONENTS	EKS-00-CC-322-D-C0
C6	26421/114	CAPACITOR-FIXED ALUMINIUM 22uF +/-20% 25V ELECTROLYTIC, RADIAL, 5mm PWP, (TAPED).	PANASONIC INDUSTRIAL	ECE-A-1E-KA-220-B
C7	26582/432	CAPACITOR-FIXED POLYESTER 1uF +/-10% 50V 330 ppm/DEG.C, RADIAL, 5mm PWP, (TAPED).	VISHAY COMPONENTS	MKT-1826-510/065
C8	26421/112	CAPACITOR-FIXED ALUMINIUM 10uF +/-20% 35V ELECTROLYTIC, RADIAL, 5mm PWP, (TAPED).	PANASONIC INDUSTRIAL	ECE-A-1V-KA-100-B
C9	26421/152	CAPACITOR-FIXED ALUMINIUM 220uF +/-20% 16V ELECTROLYTIC, RADIAL, 5mm PWP, 9mm MAX BODY DIA,	VISHAY COMPONENTS	EKS-00-CC-322-D-C0
C10	26421/114	CAPACITOR-FIXED ALUMINIUM 22uF +/-20% 25V ELECTROLYTIC, RADIAL, 5mm PWP, (TAPED).	PANASONIC INDUSTRIAL	ECE-A-1E-KA-220-B
C11	26421/152	CAPACITOR-FIXED ALUMINIUM 220uF +/-20% 16V ELECTROLYTIC, RADIAL, 5mm PWP, 9mm MAX BODY DIA,	VISHAY COMPONENTS	EKS-00-CC-322-D-C0
C12	26421/114	CAPACITOR-FIXED ALUMINIUM 22uF +/-20% 25V ELECTROLYTIC, RADIAL, 5mm PWP, (TAPED).	PANASONIC INDUSTRIAL	ECE-A-1E-KA-220-B
C13	26582/432	CAPACITOR-FIXED POLYESTER 1uF +/-10% 50V 330 ppm/DEG.C, RADIAL, 5mm PWP, (TAPED).	VISHAY COMPONENTS	MKT-1826-510/065
C14	26421/112	CAPACITOR-FIXED ALUMINIUM 10uF +/-20% 35V ELECTROLYTIC, RADIAL, 5mm PWP, (TAPED).	PANASONIC INDUSTRIAL	ECE-A-1V-KA-100-B
C15	26386/887	CAPACITOR-FIXED CERAMIC 100nF +/-10% 50V X7R/2C1, MULTILAYER, SURFACE-MOUNTED, SIZE 1210, NICKEL	ROHM ELECTRONICS LTD	MCH32-5C-104-KP
C16	26386/887	CAPACITOR-FIXED CERAMIC 100nF +/-10% 50V X7R/2C1, MULTILAYER, SURFACE-MOUNTED, SIZE 1210, NICKEL	ROHM ELECTRONICS LTD	MCH32-5C-104-KP
C17	26582/435	CAPACITOR-FIXED POLYESTER 33nF +/-10% 63V 330 ppm/DEG.C, RADIAL, 5mm PWP, (LOOSE OR TAPED).	VISHAY COMPONENTS	MKT-1817-333/015
C18	26582/435	CAPACITOR-FIXED POLYESTER 33nF +/-10% 63V 330 ppm/DEG.C, RADIAL, 5mm PWP, (LOOSE OR TAPED).	VISHAY COMPONENTS	MKT-1817-333/015
C19	26582/431	CAPACITOR-FIXED POLYESTER 22nF +/-10% 63V 330 ppm/DEG.C, RADIAL, 5mm PWP, (TAPED).	VISHAY COMPONENTS	MKT-1817-322/015
C20	26582/431	CAPACITOR-FIXED POLYESTER 22nF +/-10% 63V 330 ppm/DEG.C, RADIAL, 5mm PWP, (TAPED).	VISHAY COMPONENTS	MKT-1817-322/015
C22	26386/887	CAPACITOR-FIXED CERAMIC 100nF +/-10% 50V X7R/2C1, MULTILAYER, SURFACE-MOUNTED, SIZE 1210, NICKEL	ROHM ELECTRONICS LTD	MCH32-5C-104-KP
C23	26582/439	CAPACITOR-FIXED POLYESTER 680nF +/-10% 50V 330 ppm/DEG.C, RADIAL, 5mm PWP, (TAPED).	VISHAY COMPONENTS	MKT-1826-468/065
C24	26582/439	CAPACITOR-FIXED POLYESTER 680nF +/-10% 50V 330 ppm/DEG.C, RADIAL, 5mm PWP, (TAPED).	VISHAY COMPONENTS	MKT-1826-468/065
C25	26386/887	CAPACITOR-FIXED CERAMIC 100nF +/-10% 50V X7R/2C1, MULTILAYER, SURFACE-MOUNTED, SIZE 1210, NICKEL	ROHM ELECTRONICS LTD	MCH32-5C-104-KP

Cir. Ref.	MI part number	Description	Manufacturer	Manufacturer's part number
RF oscillator C2 (contd.)				
C26	26386/887	CAPACITOR-FIXED CERAMIC 100nF +/-10% 50V X7R/2C1, MULTILAYER, SURFACE-MOUNTED, SIZE 1210, NICKEL	ROHM ELECTRONICS LTD	MCH32-5C-104-KP
C27	26386/898	CAPACITOR-FIXED CERAMIC 5.6pF +/-0.1pF 50V 60 ppm/DEG.C, HIGH-Q, SINGLELAYER, SURFACE-MOUNTED,	AVX LTD	0805-5K5R6-BAW-TR
C28	26386/830	CAPACITOR-FIXED CERAMIC 330pF +/-5% 50V NP0 MULTILAYER, SURFACE-MOUNTED, SIZE 0805, NICKEL	ROHM ELECTRONICS LTD	MCH21-5A-331-JP
C29	26343/767	CAPACITOR-FIXED CERAMIC 10pF +/-5% 50V NPO MULTILAYER, SURFACE-MOUNTED, SIZE 0805, NICKEL	ROHM ELECTRONICS LTD	MCH21-5A-100-DP
C30	26386/830	CAPACITOR-FIXED CERAMIC 330pF +/-5% 50V NP0 MULTILAYER, SURFACE-MOUNTED, SIZE 0805, NICKEL	ROHM ELECTRONICS LTD	MCH21-5A-331-JP
C31	26386/955	CAPACITOR-FIXED CERAMIC 10pF +/-0.25pF 100V 60 ppm/DEG.C, HIGH-Q, SINGLELAYER, SURFACE-MOUNTED,	AVX LTD	0805-1K-100-GAW-TR
C32	26386/830	CAPACITOR-FIXED CERAMIC 330pF +/-5% 50V NP0 MULTILAYER, SURFACE-MOUNTED, SIZE 0805, NICKEL	ROHM ELECTRONICS LTD	MCH21-5A-331-JP
C33	26386/830	CAPACITOR-FIXED CERAMIC 330pF +/-5% 50V NP0 MULTILAYER, SURFACE-MOUNTED, SIZE 0805, NICKEL	ROHM ELECTRONICS LTD	MCH21-5A-331-JP
C34 to C36	26386/887	CAPACITOR-FIXED CERAMIC 100nF +/-10% 50V X7R/2C1, MULTILAYER, SURFACE-MOUNTED, SIZE 1210, NICKEL	ROHM ELECTRONICS LTD	MCH32-5C-104-KP
C37	26386/830	CAPACITOR-FIXED CERAMIC 330pF +/-5% 50V NP0 MULTILAYER, SURFACE-MOUNTED, SIZE 0805, NICKEL	ROHM ELECTRONICS LTD	MCH21-5A-331-JP
C38	26386/887	CAPACITOR-FIXED CERAMIC 100nF +/-10% 50V X7R/2C1, MULTILAYER, SURFACE-MOUNTED, SIZE 1210, NICKEL	ROHM ELECTRONICS LTD	MCH32-5C-104-KP
C39	26386/830	CAPACITOR-FIXED CERAMIC 330pF +/-5% 50V NP0 MULTILAYER, SURFACE-MOUNTED, SIZE 0805, NICKEL	ROHM ELECTRONICS LTD	MCH21-5A-331-JP
C40	26386/830	CAPACITOR-FIXED CERAMIC 330pF +/-5% 50V NP0 MULTILAYER, SURFACE-MOUNTED, SIZE 0805, NICKEL	ROHM ELECTRONICS LTD	MCH21-5A-331-JP
C45	26386/863	CAPACITOR-FIXED CERAMIC 1nF +/-10% 50V X7R/2C1, MULTILAYER, SURFACE-MOUNTED, SIZE 0805, NICKEL	ROHM ELECTRONICS LTD	MCH21-5C-102-KP
C49 to C54	26421/112	CAPACITOR-FIXED ALUMINIUM 10uF +/-20% 35V ELECTROLYTIC, RADIAL, 5mm PWP, (TAPED).	PANASONIC INDUSTRIAL	ECE-A-1V-KA-100-B
C55	26386/875	CAPACITOR-FIXED CERAMIC 10nF +/-10% 50V X7R/2C1, MULTILAYER, SURFACE-MOUNTED, SIZE 0805, NICKEL	ROHM ELECTRONICS LTD	MCH21-5C-103-KP
C56	26386/875	CAPACITOR-FIXED CERAMIC 10nF +/-10% 50V X7R/2C1, MULTILAYER, SURFACE-MOUNTED, SIZE 0805, NICKEL	ROHM ELECTRONICS LTD	MCH21-5C-103-KP
C57 to C59	26386/887	CAPACITOR-FIXED CERAMIC 100nF +/-10% 50V X7R/2C1, MULTILAYER, SURFACE-MOUNTED, SIZE 1210, NICKEL	ROHM ELECTRONICS LTD	MCH32-5C-104-KP
C62 to C65	26386/875	CAPACITOR-FIXED CERAMIC 10nF +/-10% 50V X7R/2C1, MULTILAYER, SURFACE-MOUNTED, SIZE 0805, NICKEL	ROHM ELECTRONICS LTD	MCH21-5C-103-KP
C67	26421/153	CAPACITOR-FIXED ALUMINIUM 470uF +/-20% 6.3V ELECTROLYTIC, RADIAL, 5mm PWP, 9mm MAX BODY DIA,	VISHAY COMPONENTS	EKS-00-CC-347-C-C0
C68	26421/112	CAPACITOR-FIXED ALUMINIUM 10uF +/-20% 35V ELECTROLYTIC, RADIAL, 5mm PWP, (TAPED).	PANASONIC INDUSTRIAL	ECE-A-1V-KA-100-B
C69	26421/152	CAPACITOR-FIXED ALUMINIUM 220uF +/-20% 16V ELECTROLYTIC, RADIAL, 5mm PWP, 9mm MAX BODY DIA,	VISHAY COMPONENTS	EKS-00-CC-322-D-C0
C70	26421/152	CAPACITOR-FIXED ALUMINIUM 220uF +/-20% 16V ELECTROLYTIC, RADIAL, 5mm PWP, 9mm MAX BODY DIA,	VISHAY COMPONENTS	EKS-00-CC-322-D-C0
C71	26386/867	CAPACITOR-FIXED CERAMIC 2.2nF +/-10% 50V X7R/2C1, MULTILAYER, SURFACE-MOUNTED, SIZE 0805, NICKEL	ROHM ELECTRONICS LTD	MCH21-5C-222-KP
C72	26421/152	CAPACITOR-FIXED ALUMINIUM 220uF +/-20% 16V ELECTROLYTIC, RADIAL, 5mm PWP, 9mm MAX BODY DIA,	VISHAY COMPONENTS	EKS-00-CC-322-D-C0
C73	26421/152	CAPACITOR-FIXED ALUMINIUM 220uF +/-20% 16V ELECTROLYTIC, RADIAL, 5mm PWP, 9mm MAX BODY DIA,	VISHAY COMPONENTS	EKS-00-CC-322-D-C0

Cir. Ref.	MI part number	Description	Manufacturer	Manufacturer's part number
RF oscillator C2 (contd.)				
C74	26386/830	CAPACITOR-FIXED CERAMIC 330pF +/-5% 50V NP0 MULTILAYER, SURFACE-MOUNTED, SIZE 0805, NICKEL	ROHM ELECTRONICS LTD	MCH21-5A-331-JP
C83	26386/863	CAPACITOR-FIXED CERAMIC 1nF +/-10% 50V X7R/2C1, MULTILAYER, SURFACE-MOUNTED, SIZE 0805, NICKEL	ROHM ELECTRONICS LTD	MCH21-5C-102-KP
C84	26582/440	CAPACITOR-FIXED POLYESTER 4.7nF +/-10% 63V 330 ppm/DEG.C, RADIAL, 5mm PWP, (TAPED).	DUBILIER CAPACITORS	MMP-4.7nF-K-63V-T/R
C85	26582/440	CAPACITOR-FIXED POLYESTER 4.7nF +/-10% 63V 330 ppm/DEG.C, RADIAL, 5mm PWP, (TAPED).	DUBILIER CAPACITORS	MMP-4.7nF-K-63V-T/R
C100 to C102	26386/824	CAPACITOR-FIXED CERAMIC 100pF +/-5% 50V NP0 MULTILAYER, SURFACE-MOUNTED, SIZE 0805, NICKEL	ROHM ELECTRONICS LTD	MCH21-5A-101-JP
C103	26386/887	CAPACITOR-FIXED CERAMIC 100nF +/-10% 50V X7R/2C1, MULTILAYER, SURFACE-MOUNTED, SIZE 1210, NICKEL	ROHM ELECTRONICS LTD	MCH32-5C-104-KP
C104	26386/887	CAPACITOR-FIXED CERAMIC 100nF +/-10% 50V X7R/2C1, MULTILAYER, SURFACE-MOUNTED, SIZE 1210, NICKEL	ROHM ELECTRONICS LTD	MCH32-5C-104-KP
C120	26386/875	CAPACITOR-FIXED CERAMIC 10nF +/-10% 50V X7R/2C1, MULTILAYER, SURFACE-MOUNTED, SIZE 0805, NICKEL	ROHM ELECTRONICS LTD	MCH21-5C-103-KP
C121	26386/875	CAPACITOR-FIXED CERAMIC 10nF +/-10% 50V X7R/2C1, MULTILAYER, SURFACE-MOUNTED, SIZE 0805, NICKEL	ROHM ELECTRONICS LTD	MCH21-5C-103-KP
C122	26386/887	CAPACITOR-FIXED CERAMIC 100nF +/-10% 50V X7R/2C1, MULTILAYER, SURFACE-MOUNTED, SIZE 1210, NICKEL	ROHM ELECTRONICS LTD	MCH32-5C-104-KP
C123	26386/887	CAPACITOR-FIXED CERAMIC 100nF +/-10% 50V X7R/2C1, MULTILAYER, SURFACE-MOUNTED, SIZE 1210, NICKEL	ROHM ELECTRONICS LTD	MCH32-5C-104-KP
C124	26343/767	CAPACITOR-FIXED CERAMIC 10pF +/-5% 50V NPO MULTILAYER, SURFACE-MOUNTED, SIZE 0805, NICKEL	ROHM ELECTRONICS LTD	MCH21-5A-100-DP
C125	26421/118	CAPACITOR-FIXED ALUMINIUM 100uF +/-20% 6.3V ELECTROLYTIC, RADIAL, 5mm PWP, (TAPED).	PANASONIC INDUSTRIAL	ECE-A-0J-KA-101-B
D1	28383/930	DIODE SMALL-SIGNAL, BAS16... 330mW 75V 250mA 2pF 1Vf @ 50mA, MARKING CODE A6, SURFACE MOUNTED,	PHILIPS	BAS16
D2	28371/443	DIODE ZENER, BZX84-C5V6... 250mW 5.6V 5% 250mA MARKING CODE Z3, SURFACE MOUNTED, SOT-23, (8mm	PHILIPS	BZX84-C5V6
D3 to D5	28383/930	DIODE SMALL-SIGNAL, BAS16... 330mW 75V 250mA 2pF 1Vf @ 50mA, MARKING CODE A6, SURFACE MOUNTED,	PHILIPS	BAS16
D6	28371/443	DIODE ZENER, BZX84-C5V6... 250mW 5.6V 5% 250mA MARKING CODE Z3, SURFACE MOUNTED, SOT-23, (8mm	PHILIPS	BZX84-C5V6
D7	28383/930	DIODE SMALL-SIGNAL, BAS16... 330mW 75V 250mA 2pF 1Vf @ 50mA, MARKING CODE A6, SURFACE MOUNTED,	PHILIPS	BAS16
D8	28383/930	DIODE SMALL-SIGNAL, BAS16... 330mW 75V 250mA 2pF 1Vf @ 50mA, MARKING CODE A6, SURFACE MOUNTED,	PHILIPS	BAS16
D9	28381/133	DIODE VARIABLE CAPACITNCE, BB515... 30V 20mA 2.1pF @ 28V, CAPAC RATIO 8.0 MIN, SURFACE MOUNTED,	PHILIPS	BB515
D10	28383/931	DIODE PIN, BAR14-1... DUAL, 140mW 100V 100mA 0.5pF 1.25Vf @ 100mA, IN SERIES, MARKING CODE L7,	SIEMENS LTD	BAR14-1-E6327
D13	28371/443	DIODE ZENER, BZX84-C5V6... 250mW 5.6V 5% 250mA MARKING CODE Z3, SURFACE MOUNTED, SOT-23, (8mm	PHILIPS	BZX84-C5V6
D14	28371/443	DIODE ZENER, BZX84-C5V6... 250mW 5.6V 5% 250mA MARKING CODE Z3, SURFACE MOUNTED, SOT-23, (8mm	PHILIPS	BZX84-C5V6
IC1	28461/741	IC-ANALOGUE VOLTAGE-REGULATOR LM317L... 37V 100mA POSITIVE ADJUSTABLE, LINEAR, MONOLITHIC, 3 PIN,	NAT. SEMICONDUCTOR	LM317LZ

Cir. Ref.	MI part number	Description	Manufacturer	Manufacturer's part number
RF oscillator C2 (contd.)				
IC2	28461/412	IC-ANALOGUE OPERATIONAL AMP TL072... DUAL, 18V UNITY GAIN BNDWDTH 3MHz, OFFSET VOLTAGE 10mV, SLEW	MOTOROLA INC.	TL072CD
IC3	28462/638	IC-DIGITAL FLIP-FLOP/D-TYPE 74HC74... 2 BIT, DUAL, POS EDGE TRIGGER, PLUS SET & CLEAR, CMOS-H/SPEED,	PHILIPS	74HC74D
IC4	28462/638	IC-DIGITAL FLIP-FLOP/D-TYPE 74HC74... 2 BIT, DUAL, POS EDGE TRIGGER, PLUS SET & CLEAR, CMOS-H/SPEED,	PHILIPS	74HC74D
IC5	28466/390	IC-DIGITAL NAND-GATE 74HC00... 2 INPUT, QUAD, CMOS-H/SPEED, 14 PIN, SMALL-OUTLINE.	PHILIPS	74HC00D
IC6	28461/999	IC-ANALOGUE SWITCH DG441... QUAD, 15V SPST, ON-RESISTANCE<85R, 4 x N/O @ LOGIC 1, TTL	TEMIC UK LTD	DG441DY
IC7	28461/450	IC-ANALOGUE MICROWAVE-AMP MSA-0486... 5.25V 50mA GAIN 8dB @ 1GHz, 3dB BANDWIDTH DC-3.2GHz, BIPOLAR,	HEWLETT-PACKARD	MSA-0486-TR1
IC8	28461/454	IC-ANALOGUE MICROWAVE-AMP MSA-0786... 4V 22mA GAIN 12.5dB @ 1GHz, 3dB BANDWIDTH DC-2GHz, BIPOLAR, 4	HEWLETT-PACKARD	MSA-0786-TR1
IC15	28461/897	IC-ANALOGUE OPERATIONAL AMP OP-27GS... 22V LOW NOISE, 8 PIN, SMALL-OUTLINE.	ANALOG DEVICES LTD	OP-27GS
IC16	28461/896	IC-ANALOGUE SWITCH DG413... QUAD, 15V SPST, ON-RESISTANCE<35R, 2 x N/O & 2 x N/C @ LOGIC 1,	TEMIC UK LTD	DG413DY
IC17	28461/896	IC-ANALOGUE SWITCH DG413... QUAD, 15V SPST, ON-RESISTANCE<35R, 2 x N/O & 2 x N/C @ LOGIC 1,	TEMIC UK LTD	DG413DY
IC18	28461/897	IC-ANALOGUE OPERATIONAL AMP OP-27GS... 22V LOW NOISE, 8 PIN, SMALL-OUTLINE.	ANALOG DEVICES LTD	OP-27GS
IC19	28461/897	IC-ANALOGUE OPERATIONAL AMP OP-27GS... 22V LOW NOISE, 8 PIN, SMALL-OUTLINE.	ANALOG DEVICES LTD	OP-27GS
IC20	28462/638	IC-DIGITAL FLIP-FLOP/D-TYPE 74HC74... 2 BIT, DUAL, POS EDGE TRIGGER, PLUS SET & CLEAR, CMOS-H/SPEED,	PHILIPS	74HC74D
IC21	28466/032	IC-DIGITAL AND-GATE 74HC08... 2 INPUT, QUAD, CMOS-H/SPEED, 14 PIN, SMALL-OUTLINE.	PHILIPS	74HC08D
L1 to L4	23642/333	INDUCTOR-FIXED 470uH +/- 10% SCREENED, EPOXY-MOULD, 310mA 3R3 MAX, 90 Q @ 0.79 MHz, 3 MHz	VISHAY COMPONENTS	VL471K
L5	23642/362	INDUCTOR-FIXED 10mH +/- 10% SCREENED, EPOXY-MOULD, 69mA 75R MAX, 70 Q @ 0.25 MHz, 0.7 MHz SRF,	VISHAY COMPONENTS	VL103K
L6	23642/362	INDUCTOR-FIXED 10mH +/- 10% SCREENED, EPOXY-MOULD, 69mA 75R MAX, 70 Q @ 0.25 MHz, 0.7 MHz SRF,	VISHAY COMPONENTS	VL103K
L8 to L15	23642/518	INDUCTOR-FIXED 0.56uH +/- 20% EPOXY-MOULD, 450mA 0R55 MAX, 30 Q @ 25.2 MHz, 180 MHz SRF, SURFACE	MEGGITT ELECTRONICS	3612-T-R56-M
R1	24811/158	RESISTOR-FIXED METAL-FILM 243R +/- 1% 250mW 200V 50 ppm/DEG.C, SURFACE MOUNTED, SIZE MINI-MELF,	VISHAY COMPONENTS	SMM0204-243R-1%50ppm
R2	24811/189	RESISTOR-FIXED METAL-FILM 4K75 +/- 1% 250mW 200V 50 ppm/DEG.C, SURFACE MOUNTED, SIZE MINI-MELF,	VISHAY COMPONENTS	SMM0204-4K75-1%50ppm
R3	24811/125	RESISTOR-FIXED METAL-FILM 10R +/- 1% 250mW 200V 50 ppm/DEG.C, SURFACE MOUNTED, SIZE MINI-MELF, (8mm	VISHAY COMPONENTS	SMM0204-10R-1%-50ppm
R4	24811/223	RESISTOR-FIXED METAL-FILM 121K +/- 1% 250mW 200V 50 ppm/DEG.C, SURFACE MOUNTED, SIZE MINI-MELF,	VISHAY COMPONENTS	SMM0204-121K-1%50ppm
R5	24811/213	RESISTOR-FIXED METAL-FILM 47K5 +/- 1% 250mW 200V 50 ppm/DEG.C, SURFACE MOUNTED, SIZE MINI-MELF,	VISHAY COMPONENTS	SMM0204-47K5-1%50ppm

Cir. Ref.	MI part number	Description	Manufacturer	Manufacturer's part number
RF oscillator C2 (contd.)				
R6	24811/245	RESISTOR-FIXED METAL-FILM 1M +/- 1% 250mW 200V 50 ppm/DEG.C, SURFACE MOUNTED, SIZE MINI-MELF, (8mm	VISHAY COMPONENTS	SMM0204-1M0-1%50ppm
R7	24811/175	RESISTOR-FIXED METAL-FILM 1K21 +/- 1% 250mW 200V 50 ppm/DEG.C, SURFACE MOUNTED, SIZE MINI-MELF,	VISHAY COMPONENTS	SMM0204-1K21-1%50ppm
R8	24811/149	RESISTOR-FIXED METAL-FILM 100R +/- 1% 250mW 200V 50 ppm/DEG.C, SURFACE MOUNTED, SIZE MINI-MELF,	VISHAY COMPONENTS	SMM0204-100R-1%50ppm
R9	24811/157	RESISTOR-FIXED METAL-FILM 221R +/- 1% 250mW 200V 50 ppm/DEG.C, SURFACE MOUNTED, SIZE MINI-MELF,	VISHAY COMPONENTS	SMM0204-221R-1%50ppm
R10	24811/213	RESISTOR-FIXED METAL-FILM 47K5 +/- 1% 250mW 200V 50 ppm/DEG.C, SURFACE MOUNTED, SIZE MINI-MELF,	VISHAY COMPONENTS	SMM0204-47K5-1%50ppm
R11	24811/223	RESISTOR-FIXED METAL-FILM 121K +/- 1% 250mW 200V 50 ppm/DEG.C, SURFACE MOUNTED, SIZE MINI-MELF,	VISHAY COMPONENTS	SMM0204-121K-1%50ppm
R12	24811/134	RESISTOR-FIXED METAL-FILM 24R3 +/- 1% 250mW 200V 50 ppm/DEG.C, SURFACE MOUNTED, SIZE MINI-MELF,	VISHAY COMPONENTS	SMM0204-24R3-1%50ppm
R13	24811/245	RESISTOR-FIXED METAL-FILM 1M +/- 1% 250mW 200V 50 ppm/DEG.C, SURFACE MOUNTED, SIZE MINI-MELF, (8mm	VISHAY COMPONENTS	SMM0204-1M0-1%50ppm
R14	24811/175	RESISTOR-FIXED METAL-FILM 1K21 +/- 1% 250mW 200V 50 ppm/DEG.C, SURFACE MOUNTED, SIZE MINI-MELF,	VISHAY COMPONENTS	SMM0204-1K21-1%50ppm
R15	24811/149	RESISTOR-FIXED METAL-FILM 100R +/- 1% 250mW 200V 50 ppm/DEG.C, SURFACE MOUNTED, SIZE MINI-MELF,	VISHAY COMPONENTS	SMM0204-100R-1%50ppm
R16	24811/171	RESISTOR-FIXED METAL-FILM 825R +/- 1% 250mW 200V 50 ppm/DEG.C, SURFACE MOUNTED, SIZE MINI-MELF,	VISHAY COMPONENTS	SMM0204-825R-1%50ppm
R17 to R19	24811/181	RESISTOR-FIXED METAL-FILM 2K21 +/- 1% 250mW 200V 50 ppm/DEG.C, SURFACE MOUNTED, SIZE MINI-MELF,	VISHAY COMPONENTS	SMM0204-2K21-1%50ppm
R20	24811/149	RESISTOR-FIXED METAL-FILM 100R +/- 1% 250mW 200V 50 ppm/DEG.C, SURFACE MOUNTED, SIZE MINI-MELF,	VISHAY COMPONENTS	SMM0204-100R-1%50ppm
R21	24811/149	RESISTOR-FIXED METAL-FILM 100R +/- 1% 250mW 200V 50 ppm/DEG.C, SURFACE MOUNTED, SIZE MINI-MELF,	VISHAY COMPONENTS	SMM0204-100R-1%50ppm
R22	24811/172	RESISTOR-FIXED METAL-FILM 909R +/- 1% 250mW 200V 50 ppm/DEG.C, SURFACE MOUNTED, SIZE MINI-MELF,	VISHAY COMPONENTS	SMM0204-909R-1%50ppm
R23	24811/181	RESISTOR-FIXED METAL-FILM 2K21 +/- 1% 250mW 200V 50 ppm/DEG.C, SURFACE MOUNTED, SIZE MINI-MELF,	VISHAY COMPONENTS	SMM0204-2K21-1%50ppm
R24	24811/149	RESISTOR-FIXED METAL-FILM 100R +/- 1% 250mW 200V 50 ppm/DEG.C, SURFACE MOUNTED, SIZE MINI-MELF,	VISHAY COMPONENTS	SMM0204-100R-1%50ppm
R25	24811/149	RESISTOR-FIXED METAL-FILM 100R +/- 1% 250mW 200V 50 ppm/DEG.C, SURFACE MOUNTED, SIZE MINI-MELF,	VISHAY COMPONENTS	SMM0204-100R-1%50ppm
R26	24811/170	RESISTOR-FIXED METAL-FILM 750R +/- 1% 250mW 200V 50 ppm/DEG.C, SURFACE MOUNTED, SIZE MINI-MELF,	VISHAY COMPONENTS	SMM0204-750R-1%50ppm
R27	24811/149	RESISTOR-FIXED METAL-FILM 100R +/- 1% 250mW 200V 50 ppm/DEG.C, SURFACE MOUNTED, SIZE MINI-MELF,	VISHAY COMPONENTS	SMM0204-100R-1%50ppm
R30	24811/149	RESISTOR-FIXED METAL-FILM 100R +/- 1% 250mW 200V 50 ppm/DEG.C, SURFACE MOUNTED, SIZE MINI-MELF,	VISHAY COMPONENTS	SMM0204-100R-1%50ppm
R31	24811/170	RESISTOR-FIXED METAL-FILM 750R +/- 1% 250mW 200V 50 ppm/DEG.C, SURFACE MOUNTED, SIZE MINI-MELF,	VISHAY COMPONENTS	SMM0204-750R-1%50ppm
R32	24811/177	RESISTOR-FIXED METAL-FILM 1K5 +/- 1% 250mW 200V 50 ppm/DEG.C, SURFACE MOUNTED, SIZE MINI-MELF, (8mm	VISHAY COMPONENTS	SMM0204-1K5-1%50ppm
R33	24811/177	RESISTOR-FIXED METAL-FILM 1K5 +/- 1% 250mW 200V 50 ppm/DEG.C, SURFACE MOUNTED, SIZE MINI-MELF, (8mm	VISHAY COMPONENTS	SMM0204-1K5-1%50ppm
R34	24811/185	RESISTOR-FIXED METAL-FILM 3K32 +/- 1% 250mW 200V 50 ppm/DEG.C, SURFACE MOUNTED, SIZE MINI-MELF,	VISHAY COMPONENTS	SMM0204-3K32-1%50ppm
R35	24811/189	RESISTOR-FIXED METAL-FILM 4K75 +/- 1% 250mW 200V 50 ppm/DEG.C, SURFACE MOUNTED, SIZE MINI-MELF,	VISHAY COMPONENTS	SMM0204-4K75-1%50ppm

Cir. Ref.	MI part number	Description	Manufacturer	Manufacturer's part number
RF oscillator C2 (contd.)				
R36	24811/185	RESISTOR-FIXED METAL-FILM 3K32 +/- 1% 250mW 200V 50 ppm/DEG.C, SURFACE MOUNTED, SIZE MINI-MELF,	VISHAY COMPONENTS	SMM0204-3K32-1%50ppm
R37	24811/155	RESISTOR-FIXED METAL-FILM 182R +/- 1% 250mW 200V 50 ppm/DEG.C, SURFACE MOUNTED, SIZE MINI-MELF,	VISHAY COMPONENTS	SMM0204-182R-1%50ppm
R38	24811/133	RESISTOR-FIXED METAL-FILM 22R1 +/- 1% 250mW 200V 50 ppm/DEG.C, SURFACE MOUNTED, SIZE MINI-MELF,	VISHAY COMPONENTS	SMM0204-22R1-1%50ppm
R39	24811/143	RESISTOR-FIXED METAL-FILM 56R2 +/- 1% 250mW 200V 50 ppm/DEG.C, SURFACE MOUNTED, SIZE MINI-MELF,	VISHAY COMPONENTS	SMM0204-56R2-1%50ppm
R40	24772/057	RESISTOR-FIXED METAL-FILM 220R +/- 2% 125mW 150V 100 ppm/DEG.C, AXIAL, (TAPED).	VISHAY COMPONENTS	NK3-220R-2%
R41	24811/901	RESISTOR-FIXED METAL-FILM 10R +/- 1% 250mW 200V 50 ppm/DEG.C, LOW-INDUCTANCE, SURFACE MOUNTED, SIZE	VISHAY COMPONENTS	SMM0204-HF-10R-1%
R42	24811/901	RESISTOR-FIXED METAL-FILM 10R +/- 1% 250mW 200V 50 ppm/DEG.C, LOW-INDUCTANCE, SURFACE MOUNTED, SIZE	VISHAY COMPONENTS	SMM0204-HF-10R-1%
R43	24772/067	RESISTOR-FIXED METAL-FILM 560R +/- 2% 125mW 150V 100 ppm/DEG.C, AXIAL, (TAPED).	VISHAY COMPONENTS	NK3-560R-2%
R44 to R46	24811/197	RESISTOR-FIXED METAL-FILM 10K +/- 1% 250mW 200V 50 ppm/DEG.C, SURFACE MOUNTED, SIZE MINI-MELF, (8mm	VISHAY COMPONENTS	SMM0204-10K-1%50ppm
R47	24811/173	RESISTOR-FIXED METAL-FILM 1K +/- 1% 250mW 200V 50 ppm/DEG.C, SURFACE MOUNTED, SIZE MINI-MELF, (8mm	VISHAY COMPONENTS	SMM0204-1K0-1%-50ppm
R48	24811/173	RESISTOR-FIXED METAL-FILM 1K +/- 1% 250mW 200V 50 ppm/DEG.C, SURFACE MOUNTED, SIZE MINI-MELF, (8mm	VISHAY COMPONENTS	SMM0204-1K0-1%-50ppm
R49	24811/902	RESISTOR-FIXED METAL-FILM 16R2 +/- 1% 250mW 200V 50 ppm/DEG.C, LOW-INDUCTANCE, SURFACE MOUNTED,	VISHAY COMPONENTS	SMM0204-HF-16R2-1%
R50	24811/910	RESISTOR-FIXED METAL-FILM 61R9 +/- 1% 250mW 200V 50 ppm/DEG.C, LOW-INDUCTANCE, SURFACE MOUNTED,	VISHAY COMPONENTS	SMM0204-HF-61R9-1%
R51	24811/910	RESISTOR-FIXED METAL-FILM 61R9 +/- 1% 250mW 200V 50 ppm/DEG.C, LOW-INDUCTANCE, SURFACE MOUNTED,	VISHAY COMPONENTS	SMM0204-HF-61R9-1%
R52	24811/175	RESISTOR-FIXED METAL-FILM 1K21 +/- 1% 250mW 200V 50 ppm/DEG.C, SURFACE MOUNTED, SIZE MINI-MELF,	VISHAY COMPONENTS	SMM0204-1K21-1%50ppm
R53	24811/175	RESISTOR-FIXED METAL-FILM 1K21 +/- 1% 250mW 200V 50 ppm/DEG.C, SURFACE MOUNTED, SIZE MINI-MELF,	VISHAY COMPONENTS	SMM0204-1K21-1%50ppm
R54	24338/004	RESISTOR-FIXED METAL-GLAZE 150R +/- 5% 1W 100V 350 ppm/DEG.C, SURFACE MOUNTED, SIZE 2512, (12mm	VISHAY COMPONENTS	CR2512-150R-5%-P4
R55	24811/134	RESISTOR-FIXED METAL-FILM 24R3 +/- 1% 250mW 200V 50 ppm/DEG.C, SURFACE MOUNTED, SIZE MINI-MELF,	VISHAY COMPONENTS	SMM0204-24R3-1%50ppm
R59	24811/173	RESISTOR-FIXED METAL-FILM 1K +/- 1% 250mW 200V 50 ppm/DEG.C, SURFACE MOUNTED, SIZE MINI-MELF, (8mm	VISHAY COMPONENTS	SMM0204-1K0-1%-50ppm
R60	24772/066	RESISTOR-FIXED METAL-FILM 510R +/- 2% 125mW 150V 100 ppm/DEG.C, AXIAL, (TAPED).	VISHAY COMPONENTS	NK3-510R-2%
R62	24811/149	RESISTOR-FIXED METAL-FILM 100R +/- 1% 250mW 200V 50 ppm/DEG.C, SURFACE MOUNTED, SIZE MINI-MELF,	VISHAY COMPONENTS	SMM0204-100R-1%50ppm
R63	24811/149	RESISTOR-FIXED METAL-FILM 100R +/- 1% 250mW 200V 50 ppm/DEG.C, SURFACE MOUNTED, SIZE MINI-MELF,	VISHAY COMPONENTS	SMM0204-100R-1%50ppm
R64	24811/181	RESISTOR-FIXED METAL-FILM 2K21 +/- 1% 250mW 200V 50 ppm/DEG.C, SURFACE MOUNTED, SIZE MINI-MELF,	VISHAY COMPONENTS	SMM0204-2K21-1%50ppm
R65	24811/159	RESISTOR-FIXED METAL-FILM 274R +/- 1% 250mW 200V 50 ppm/DEG.C, SURFACE MOUNTED, SIZE MINI-MELF,	VISHAY COMPONENTS	SMM0204-274R-1%50ppm
R66	24811/139	RESISTOR-FIXED METAL-FILM 39R2 +/- 1% 250mW 200V 50 ppm/DEG.C, SURFACE MOUNTED, SIZE MINI-MELF,	VISHAY COMPONENTS	SMM0204-39R2-1%50ppm
R67	24811/149	RESISTOR-FIXED METAL-FILM 100R +/- 1% 250mW 200V 50 ppm/DEG.C, SURFACE MOUNTED, SIZE MINI-MELF,	VISHAY COMPONENTS	SMM0204-100R-1%50ppm

Cir. Ref.	MI part number	Description	Manufacturer	Manufacturer's part number
RF oscillator C2 (contd.)				
R68	24811/149	RESISTOR-FIXED METAL-FILM 100R +/- 1% 250mW 200V 50 ppm/DEG.C, SURFACE MOUNTED, SIZE MINI-MELF,	VISHAY COMPONENTS	SMM0204-100R-1%50ppm
R69	24811/184	RESISTOR-FIXED METAL-FILM 3K01 +/- 1% 250mW 200V 50 ppm/DEG.C, SURFACE MOUNTED, SIZE MINI-MELF,	VISHAY COMPONENTS	SMM0204-3K01-1%50ppm
R70	24811/164	RESISTOR-FIXED METAL-FILM 432R +/- 1% 250mW 200V 50 ppm/DEG.C, SURFACE MOUNTED, SIZE MINI-MELF,	VISHAY COMPONENTS	SMM0204-432R-1%50ppm
R71	24811/149	RESISTOR-FIXED METAL-FILM 100R +/- 1% 250mW 200V 50 ppm/DEG.C, SURFACE MOUNTED, SIZE MINI-MELF,	VISHAY COMPONENTS	SMM0204-100R-1%50ppm
R72	24811/149	RESISTOR-FIXED METAL-FILM 100R +/- 1% 250mW 200V 50 ppm/DEG.C, SURFACE MOUNTED, SIZE MINI-MELF,	VISHAY COMPONENTS	SMM0204-100R-1%50ppm
R73	24811/171	RESISTOR-FIXED METAL-FILM 825R +/- 1% 250mW 200V 50 ppm/DEG.C, SURFACE MOUNTED, SIZE MINI-MELF,	VISHAY COMPONENTS	SMM0204-825R-1%50ppm
R74 to R76	24811/149	RESISTOR-FIXED METAL-FILM 100R +/- 1% 250mW 200V 50 ppm/DEG.C, SURFACE MOUNTED, SIZE MINI-MELF,	VISHAY COMPONENTS	SMM0204-100R-1%50ppm
R77 to R80	24811/125	RESISTOR-FIXED METAL-FILM 10R +/- 1% 250mW 200V 50 ppm/DEG.C, SURFACE MOUNTED, SIZE MINI-MELF, (8mm	VISHAY COMPONENTS	SMM0204-10R-1%-50ppm
R81	24811/905	RESISTOR-FIXED METAL-FILM 33R2 +/- 1% 250mW 200V 50 ppm/DEG.C, LOW-INDUCTANCE, SURFACE MOUNTED,	VISHAY COMPONENTS	SMM0204-HF-33R2-1%
R82	24811/929	RESISTOR-FIXED METAL-FILM 27R4 +/- 1% 250mW 200V 50 ppm/DEG.C, LOW-INDUCTANCE, SURFACE MOUNTED,	VISHAY COMPONENTS	SMM0204-HF-27R4-1%
R83	24811/905	RESISTOR-FIXED METAL-FILM 33R2 +/- 1% 250mW 200V 50 ppm/DEG.C, LOW-INDUCTANCE, SURFACE MOUNTED,	VISHAY COMPONENTS	SMM0204-HF-33R2-1%
R84	24811/906	RESISTOR-FIXED METAL-FILM 36R5 +/- 1% 250mW 200V 50 ppm/DEG.C, LOW-INDUCTANCE, SURFACE MOUNTED,	VISHAY COMPONENTS	SMM0204-HF-36R5-1%
R85	24811/906	RESISTOR-FIXED METAL-FILM 36R5 +/- 1% 250mW 200V 50 ppm/DEG.C, LOW-INDUCTANCE, SURFACE MOUNTED,	VISHAY COMPONENTS	SMM0204-HF-36R5-1%
R91 to R95	24811/225	RESISTOR-FIXED METAL-FILM 150K +/- 1% 250mW 200V 50 ppm/DEG.C, SURFACE MOUNTED, SIZE MINI-MELF,	VISHAY COMPONENTS	SMM0204-150K-1%50ppm
R96	24811/173	RESISTOR-FIXED METAL-FILM 1K +/- 1% 250mW 200V 50 ppm/DEG.C, SURFACE MOUNTED, SIZE MINI-MELF, (8mm	VISHAY COMPONENTS	SMM0204-1K0-1%-50ppm
R97	24811/173	RESISTOR-FIXED METAL-FILM 1K +/- 1% 250mW 200V 50 ppm/DEG.C, SURFACE MOUNTED, SIZE MINI-MELF, (8mm	VISHAY COMPONENTS	SMM0204-1K0-1%-50ppm
R100	24811/101	RESISTOR-FIXED METAL-FILM 1R +/- 1% 250mW 200V 50 ppm/DEG.C, SURFACE MOUNTED, SIZE MINI-MELF, (8mm	VISHAY COMPONENTS	SMM0204-1R-1%-50ppm
R101	24811/149	RESISTOR-FIXED METAL-FILM 100R +/- 1% 250mW 200V 50 ppm/DEG.C, SURFACE MOUNTED, SIZE MINI-MELF,	VISHAY COMPONENTS	SMM0204-100R-1%50ppm
R104	24811/163	RESISTOR-FIXED METAL-FILM 392R +/- 1% 250mW 200V 50 ppm/DEG.C, SURFACE MOUNTED, SIZE MINI-MELF,	VISHAY COMPONENTS	SMM0204-392R-1%50ppm
R105	24811/163	RESISTOR-FIXED METAL-FILM 392R +/- 1% 250mW 200V 50 ppm/DEG.C, SURFACE MOUNTED, SIZE MINI-MELF,	VISHAY COMPONENTS	SMM0204-392R-1%50ppm
R106	24811/205	RESISTOR-FIXED METAL-FILM 22K1 +/- 1% 250mW 200V 50 ppm/DEG.C, SURFACE MOUNTED, SIZE MINI-MELF,	VISHAY COMPONENTS	SMM0204-22K1-1%50ppm
R120	24811/143	RESISTOR-FIXED METAL-FILM 56R2 +/- 1% 250mW 200V 50 ppm/DEG.C, SURFACE MOUNTED, SIZE MINI-MELF,	VISHAY COMPONENTS	SMM0204-56R2-1%50ppm
R121	24811/190	RESISTOR-FIXED METAL-FILM 5K11 +/- 1% 250mW 200V 50 ppm/DEG.C, SURFACE MOUNTED, SIZE MINI-MELF,	VISHAY COMPONENTS	SMM0204-5K11-1%50ppm
R122	24811/185	RESISTOR-FIXED METAL-FILM 3K32 +/- 1% 250mW 200V 50 ppm/DEG.C, SURFACE MOUNTED, SIZE MINI-MELF,	VISHAY COMPONENTS	SMM0204-3K32-1%50ppm
R123	24811/137	RESISTOR-FIXED METAL-FILM 33R2 +/- 1% 250mW 200V 50 ppm/DEG.C, SURFACE MOUNTED, SIZE MINI-MELF,	VISHAY COMPONENTS	SMM0204-33R2-1%50ppm
R124	24811/917	RESISTOR-FIXED METAL-FILM 332R +/- 1% 250mW 200V 50 ppm/DEG.C, LOW-INDUCTANCE, SURFACE MOUNTED,	VISHAY COMPONENTS	SMM0204-HF-332R-1%

Cir. Ref.	MI part number	Description	Manufacturer	Manufacturer's part number
RF oscillator C2 (contd.)				
R125	24811/172	RESISTOR-FIXED METAL-FILM 909R +/- 1% 250mW 200V 50 ppm/DEG.C, SURFACE MOUNTED, SIZE MINI-MELF,	VISHAY COMPONENTS	SMM0204-909R-1%50ppm
R126	24811/137	RESISTOR-FIXED METAL-FILM 33R2 +/- 1% 250mW 200V 50 ppm/DEG.C, SURFACE MOUNTED, SIZE MINI-MELF,	VISHAY COMPONENTS	SMM0204-33R2-1%50ppm
R127	24811/173	RESISTOR-FIXED METAL-FILM 1K +/- 1% 250mW 200V 50 ppm/DEG.C, SURFACE MOUNTED, SIZE MINI-MELF, (8mm	VISHAY COMPONENTS	SMM0204-1K0-1%-50ppm
R128	24811/173	RESISTOR-FIXED METAL-FILM 1K +/- 1% 250mW 200V 50 ppm/DEG.C, SURFACE MOUNTED, SIZE MINI-MELF, (8mm	VISHAY COMPONENTS	SMM0204-1K0-1%-50ppm
R129	24811/181	RESISTOR-FIXED METAL-FILM 2K21 +/- 1% 250mW 200V 50 ppm/DEG.C, SURFACE MOUNTED, SIZE MINI-MELF,	VISHAY COMPONENTS	SMM0204-2K21-1%50ppm
R130	24811/149	RESISTOR-FIXED METAL-FILM 100R +/- 1% 250mW 200V 50 ppm/DEG.C, SURFACE MOUNTED, SIZE MINI-MELF,	VISHAY COMPONENTS	SMM0204-100R-1%50ppm
SKJ	23435/990	CONNECTOR SHORTING, SOCKET, 2 WAY, FOR 0.64mm SQ PINS, 2.54mm PITCH, 9.6mm HIGH, FREE MOUNTING,	BERG ELECTRONICS	65474-001
TR1	28453/829	TRANSISTOR NPN BIPOLAR BC848B... 30V 200MHz 200mW 100mA 290hFE @ 2mA, NOISE 2dB @ 1KHz, MARKING CODE	PHILIPS	BC848B
TR2	28433/828	TRANSISTOR PNP BIPOLAR BC858B... 30V 150MHz 200mW 100mA 220hFE MIN @ 2mA, MARKING CODE 3K, SURFACE	PHILIPS	BC858B
TR3	28457/850	TRANSISTOR NPN BIPOLAR FMMT2369... 40V 600MHz 300mW 500mA 40hFE MIN @ 10mA, MARKING CODE *1J,	PHILIPS	PMBT2369
TR4	28453/829	TRANSISTOR NPN BIPOLAR BC848B... 30V 200MHz 200mW 100mA 290hFE @ 2mA, NOISE 2dB @ 1KHz, MARKING CODE	PHILIPS	BC848B
TR5	28433/828	TRANSISTOR PNP BIPOLAR BC858B... 30V 150MHz 200mW 100mA 220hFE MIN @ 2mA, MARKING CODE 3K, SURFACE	PHILIPS	BC858B
TR6	28453/829	TRANSISTOR NPN BIPOLAR BC848B... 30V 200MHz 200mW 100mA 290hFE @ 2mA, NOISE 2dB @ 1KHz, MARKING CODE	PHILIPS	BC848B
TR7	28433/828	TRANSISTOR PNP BIPOLAR BC858B... 30V 150MHz 200mW 100mA 220hFE MIN @ 2mA, MARKING CODE 3K, SURFACE	PHILIPS	BC858B
TR8	28457/850	TRANSISTOR NPN BIPOLAR FMMT2369... 40V 600MHz 300mW 500mA 40hFE MIN @ 10mA, MARKING CODE *1J,	PHILIPS	PMBT2369
TR9	28433/828	TRANSISTOR PNP BIPOLAR BC858B... 30V 150MHz 200mW 100mA 220hFE MIN @ 2mA, MARKING CODE 3K, SURFACE	PHILIPS	BC858B
TR10	28453/829	TRANSISTOR NPN BIPOLAR BC848B... 30V 200MHz 200mW 100mA 290hFE @ 2mA, NOISE 2dB @ 1KHz, MARKING CODE	PHILIPS	BC848B
TR11	28453/829	TRANSISTOR NPN BIPOLAR BC848B... 30V 200MHz 200mW 100mA 290hFE @ 2mA, NOISE 2dB @ 1KHz, MARKING CODE	PHILIPS	BC848B
TR12 to TR14	28487/809	TRANSISTOR NPN BIPOLAR BFR93A... 12V 5GHz 250mW 35mA 40hFE MIN @ 30mA, MARKING CODE R2, SURFACE	PHILIPS	BFR93A
TR15	28433/828	TRANSISTOR PNP BIPOLAR BC858B... 30V 150MHz 200mW 100mA 220hFE MIN @ 2mA, MARKING CODE 3K, SURFACE	PHILIPS	BC858B
TR16	28453/829	TRANSISTOR NPN BIPOLAR BC848B... 30V 200MHz 200mW 100mA 290hFE @ 2mA, NOISE 2dB @ 1KHz, MARKING CODE	PHILIPS	BC848B
TR20	28457/850	TRANSISTOR NPN BIPOLAR FMMT2369... 40V 600MHz 300mW 500mA 40hFE MIN @ 10mA, MARKING CODE *1J,	PHILIPS	PMBT2369

RF divider C3

When ordering, prefix circuit reference with C3.

Cir. Ref.	MI part number	Description	Manufacturer	Manufacturer's part number
	44830-105	Complete unit	Issue 001	
C1 to C11	26386/875	CAPACITOR-FIXED CERAMIC 10nF +/-10% 50V X7R/2C1, MULTILAYER, SURFACE-MOUNTED, SIZE 0805, NICKEL	ROHM ELECTRONICS LTD	MCH21-5C-103-KP
C12	26343/753	CAPACITOR-FIXED CERAMIC 6.8pF +/-0.5pF 50V NPO MULTILAYER, SURFACE-MOUNTED, SIZE 0805, NICKEL	ROHM ELECTRONICS LTD	MCH21-5A-6R8-DP
C13 to C16	26386/863	CAPACITOR-FIXED CERAMIC 1nF +/-10% 50V X7R/2C1, MULTILAYER, SURFACE-MOUNTED, SIZE 0805, NICKEL	ROHM ELECTRONICS LTD	MCH21-5C-102-KP
C17 to C24	26386/875	CAPACITOR-FIXED CERAMIC 10nF +/-10% 50V X7R/2C1, MULTILAYER, SURFACE-MOUNTED, SIZE 0805, NICKEL	ROHM ELECTRONICS LTD	MCH21-5C-103-KP
C25	26386/973	CAPACITOR-FIXED CERAMIC 3.3pF +/-0.1pF 50V 60 ppm/DEG.C, HIGH-Q, SINGLELAYER, SURFACE-MOUNTED,	AVX LTD	0805-5K-3R3-BAW-TR
C26	26386/970	CAPACITOR-FIXED CERAMIC 1.5pF +/-0.1pF 50V 60 ppm/DEG.C, HIGH-Q, SINGLELAYER, SURFACE-MOUNTED,	AVX LTD	0805-5K-1R5-BAW-TR
C27	26386/954	CAPACITOR-FIXED CERAMIC 8.2pF +/-0.25pF 50V 60 ppm/DEG.C, HIGH-Q, SINGLELAYER, SURFACE-MOUNTED,	AVX LTD	0805-5K-8R2-CAW-TR
C28	26386/975	CAPACITOR-FIXED CERAMIC 6.8pF +/-0.1pF 50V 60 ppm/DEG.C, HIGH-Q, SINGLELAYER, SURFACE-MOUNTED,	AVX LTD	0805-5K-6R8-BAW-TR
C29	26386/970	CAPACITOR-FIXED CERAMIC 1.5pF +/-0.1pF 50V 60 ppm/DEG.C, HIGH-Q, SINGLELAYER, SURFACE-MOUNTED,	AVX LTD	0805-5K-1R5-BAW-TR
C30	26386/875	CAPACITOR-FIXED CERAMIC 10nF +/-10% 50V X7R/2C1, MULTILAYER, SURFACE-MOUNTED, SIZE 0805, NICKEL	ROHM ELECTRONICS LTD	MCH21-5C-103-KP
C31	26386/973	CAPACITOR-FIXED CERAMIC 3.3pF +/-0.1pF 50V 60 ppm/DEG.C, HIGH-Q, SINGLELAYER, SURFACE-MOUNTED,	AVX LTD	0805-5K-3R3-BAW-TR
C32	26386/969	CAPACITOR-FIXED CERAMIC 1pF +/- 0.1pF 50V 60 ppm/DEG.C, HIGH-Q, SINGLELAYER, SURFACE-MOUNTED,	AVX LTD	0805-5K-1R0-BAW-TR
C33	26386/975	CAPACITOR-FIXED CERAMIC 6.8pF +/-0.1pF 50V 60 ppm/DEG.C, HIGH-Q, SINGLELAYER, SURFACE-MOUNTED,	AVX LTD	0805-5K-6R8-BAW-TR
C34	26386/973	CAPACITOR-FIXED CERAMIC 3.3pF +/-0.1pF 50V 60 ppm/DEG.C, HIGH-Q, SINGLELAYER, SURFACE-MOUNTED,	AVX LTD	0805-5K-3R3-BAW-TR
C35	26386/972	CAPACITOR-FIXED CERAMIC 2.7pF +/-0.1pF 50V 60 ppm/DEG.C, HIGH-Q, SINGLELAYER, SURFACE-MOUNTED,	AVX LTD	0805-5K-2R7-BAW-TR
C36 to C43	26386/875	CAPACITOR-FIXED CERAMIC 10nF +/-10% 50V X7R/2C1, MULTILAYER, SURFACE-MOUNTED, SIZE 0805, NICKEL	ROHM ELECTRONICS LTD	MCH21-5C-103-KP
C44	26343/767	CAPACITOR-FIXED CERAMIC 10pF +/-5% 50V NPO MULTILAYER, SURFACE-MOUNTED, SIZE 0805, NICKEL	ROHM ELECTRONICS LTD	MCH21-5A-100-DP
C45	26386/971	CAPACITOR-FIXED CERAMIC 2.2pF +/-0.1pF 50V 60 ppm/DEG.C, HIGH-Q, SINGLELAYER, SURFACE-MOUNTED,	AVX LTD	0805-5K-2R2-BAW-TR
C46	26386/815	CAPACITOR-FIXED CERAMIC 18pF +/-5% 50V NP0 MULTILAYER, SURFACE-MOUNTED, SIZE 0805, NICKEL	ROHM ELECTRONICS LTD	MCH21-5A-180-JP
C47	26343/753	CAPACITOR-FIXED CERAMIC 6.8pF +/-0.5pF 50V NPO MULTILAYER, SURFACE-MOUNTED, SIZE 0805, NICKEL	ROHM ELECTRONICS LTD	MCH21-5A-6R8-DP
C48	26343/753	CAPACITOR-FIXED CERAMIC 6.8pF +/-0.5pF 50V NPO MULTILAYER, SURFACE-MOUNTED, SIZE 0805, NICKEL	ROHM ELECTRONICS LTD	MCH21-5A-6R8-DP
C49	26386/875	CAPACITOR-FIXED CERAMIC 10nF +/-10% 50V X7R/2C1, MULTILAYER, SURFACE-MOUNTED, SIZE 0805, NICKEL	ROHM ELECTRONICS LTD	MCH21-5C-103-KP

Cir. Ref.	MI part number	Description	Manufacturer	Manufacturer's part number
RF divider C3 (contd.)				
C50	26386/955	CAPACITOR-FIXED CERAMIC 10pF +/-0.25pF 100V 60 ppm/DEG.C, HIGH-Q, SINGLELAYER, SURFACE-MOUNTED,	AVX LTD	0805-1K-100-GAW-TR
C51	26386/985	CAPACITOR-FIXED CERAMIC 1.2pF +/-0.1pF 50V 60 ppm/DEG.C, HIGH-Q, SINGLELAYER, SURFACE-MOUNTED,	AVX LTD	0805-5K-1R2-BAW-TR
C52	26386/766	CAPACITOR-FIXED CERAMIC 15pF +/-5% 100V 60 ppm/DEG.C, HIGH-Q, SINGLELAYER, SURFACE-MOUNTED,	AVX LTD	0805-1K-150-JAW-TR
C53	26386/898	CAPACITOR-FIXED CERAMIC 5.6pF +/-0.1pF 50V 60 ppm/DEG.C, HIGH-Q, SINGLELAYER, SURFACE-MOUNTED,	AVX LTD	0805-5K5R6-BAW-TR
C54	26386/955	CAPACITOR-FIXED CERAMIC 10pF +/-0.25pF 100V 60 ppm/DEG.C, HIGH-Q, SINGLELAYER, SURFACE-MOUNTED,	AVX LTD	0805-1K-100-GAW-TR
C55	26386/875	CAPACITOR-FIXED CERAMIC 10nF +/-10% 50V X7R/2C1, MULTILAYER, SURFACE-MOUNTED, SIZE 0805, NICKEL	ROHM ELECTRONICS LTD	MCH21-5C-103-KP
C56	26386/766	CAPACITOR-FIXED CERAMIC 15pF +/-5% 100V 60 ppm/DEG.C, HIGH-Q, SINGLELAYER, SURFACE-MOUNTED,	AVX LTD	0805-1K-150-JAW-TR
C57	26386/973	CAPACITOR-FIXED CERAMIC 3.3pF +/-0.1pF 50V 60 ppm/DEG.C, HIGH-Q, SINGLELAYER, SURFACE-MOUNTED,	AVX LTD	0805-5K-3R3-BAW-TR
C58	26386/818	CAPACITOR-FIXED CERAMIC 33pF +/-5% 50V NP0 MULTILAYER, SURFACE-MOUNTED, SIZE 0805, NICKEL	ROHM ELECTRONICS LTD	MCH21-5A-330-JP
C59	26343/767	CAPACITOR-FIXED CERAMIC 10pF +/-5% 50V NPO MULTILAYER, SURFACE-MOUNTED, SIZE 0805, NICKEL	ROHM ELECTRONICS LTD	MCH21-5A-100-DP
C60	26386/766	CAPACITOR-FIXED CERAMIC 15pF +/-5% 100V 60 ppm/DEG.C, HIGH-Q, SINGLELAYER, SURFACE-MOUNTED,	AVX LTD	0805-1K-150-JAW-TR
C61 to C77	26386/875	CAPACITOR-FIXED CERAMIC 10nF +/-10% 50V X7R/2C1, MULTILAYER, SURFACE-MOUNTED, SIZE 0805, NICKEL	ROHM ELECTRONICS LTD	MCH21-5C-103-KP
C78 to C85	26386/881	CAPACITOR-FIXED CERAMIC 33nF +/-10% 50V X7R/2C1, MULTILAYER, SURFACE-MOUNTED, SIZE 1210, NICKEL	ROHM ELECTRONICS LTD	MCH32-5C-333-KP
C86	26585/001	CAPACITOR-FIXED POLYESTER 1uF +/-10% 63V SURFACE-MOUNTED, SIZE 7.3 x 10mm, 4.5mm HIGH NOM,	WIMA CAPACITORS LTD	SMD7.3-1uF10%-63V-TR
C87 to C89	26386/875	CAPACITOR-FIXED CERAMIC 10nF +/-10% 50V X7R/2C1, MULTILAYER, SURFACE-MOUNTED, SIZE 0805, NICKEL	ROHM ELECTRONICS LTD	MCH21-5C-103-KP
C90	26386/863	CAPACITOR-FIXED CERAMIC 1nF +/-10% 50V X7R/2C1, MULTILAYER, SURFACE-MOUNTED, SIZE 0805, NICKEL	ROHM ELECTRONICS LTD	MCH21-5C-102-KP
C91 to C95	26386/875	CAPACITOR-FIXED CERAMIC 10nF +/-10% 50V X7R/2C1, MULTILAYER, SURFACE-MOUNTED, SIZE 0805, NICKEL	ROHM ELECTRONICS LTD	MCH21-5C-103-KP
C96	26386/887	CAPACITOR-FIXED CERAMIC 100nF +/-10% 50V X7R/2C1, MULTILAYER, SURFACE-MOUNTED, SIZE 1210, NICKEL	ROHM ELECTRONICS LTD	MCH32-5C-104-KP
C99 to C105	26386/875	CAPACITOR-FIXED CERAMIC 10nF +/-10% 50V X7R/2C1, MULTILAYER, SURFACE-MOUNTED, SIZE 0805, NICKEL	ROHM ELECTRONICS LTD	MCH21-5C-103-KP
C115	26386/815	CAPACITOR-FIXED CERAMIC 18pF +/-5% 50V NP0 MULTILAYER, SURFACE-MOUNTED, SIZE 0805, NICKEL	ROHM ELECTRONICS LTD	MCH21-5A-180-JP
C116	26343/753	CAPACITOR-FIXED CERAMIC 6.8pF +/-0.5pF 50V NPO MULTILAYER, SURFACE-MOUNTED, SIZE 0805, NICKEL	ROHM ELECTRONICS LTD	MCH21-5A-6R8-DP
C117	26386/819	CAPACITOR-FIXED CERAMIC 39pF +/-5% 50V NP0 MULTILAYER, SURFACE-MOUNTED, SIZE 0805, NICKEL	ROHM ELECTRONICS LTD	MCH21-5A-390-JP
C118	26386/762	CAPACITOR-FIXED CERAMIC 22pF +/-5% 50V 60 ppm/DEG.C, HIGH-Q, SINGLELAYER, SURFACE-MOUNTED,	AVX LTD	0805-5K-220-JAW
C119	26343/767	CAPACITOR-FIXED CERAMIC 10pF +/-5% 50V NPO MULTILAYER, SURFACE-MOUNTED, SIZE 0805, NICKEL	ROHM ELECTRONICS LTD	MCH21-5A-100-DP
C120	26386/875	CAPACITOR-FIXED CERAMIC 10nF +/-10% 50V X7R/2C1, MULTILAYER, SURFACE-MOUNTED, SIZE 0805, NICKEL	ROHM ELECTRONICS LTD	MCH21-5C-103-KP
C121	26386/875	CAPACITOR-FIXED CERAMIC 10nF +/-10% 50V X7R/2C1, MULTILAYER, SURFACE-MOUNTED, SIZE 0805, NICKEL	ROHM ELECTRONICS LTD	MCH21-5C-103-KP

Cir. Ref.	MI part number	Description	Manufacturer	Manufacturer's part number
RF divider C3 (contd.)				
C122	26451/010	CAPACITOR-FIXED ALUMINIUM 100uF +/-20% 6.3V ELECTROLYTIC, SURFACE-MOUNTED, SIZE 6.6 x 6.6mm,	PANASONIC INDUSTRIAL	ECE-V-0JA-101P
D1	28335/670	DIODE BAND SWITCHING, BAT18... 35V 100mA 1pF MAX @ 20V, 1.2Vf @ 100mA, MARKING CODE A2, SURFACE	PHILIPS	BAT18/T1
D2	28335/670	DIODE BAND SWITCHING, BAT18... 35V 100mA 1pF MAX @ 20V, 1.2Vf @ 100mA, MARKING CODE A2, SURFACE	PHILIPS	BAT18/T1
D3	28383/932	DIODE PIN, HSMP-3810... 250mW 100V 1A 0.35pF Rs 4R0 MAX @ 100mA, MARKING CODE E0, LOW PROFILE,	HEWLETT-PACKARD	HSMP-3810-L31
D4	28335/670	DIODE BAND SWITCHING, BAT18... 35V 100mA 1pF MAX @ 20V, 1.2Vf @ 100mA, MARKING CODE A2, SURFACE	PHILIPS	BAT18/T1
D5 to D8	28383/932	DIODE PIN, HSMP-3810... 250mW 100V 1A 0.35pF Rs 4R0 MAX @ 100mA, MARKING CODE E0, LOW PROFILE,	HEWLETT-PACKARD	HSMP-3810-L31
D9	28335/670	DIODE BAND SWITCHING, BAT18... 35V 100mA 1pF MAX @ 20V, 1.2Vf @ 100mA, MARKING CODE A2, SURFACE	PHILIPS	BAT18/T1
D10	28383/932	DIODE PIN, HSMP-3810... 250mW 100V 1A 0.35pF Rs 4R0 MAX @ 100mA, MARKING CODE E0, LOW PROFILE,	HEWLETT-PACKARD	HSMP-3810-L31
D11	28383/932	DIODE PIN, HSMP-3810... 250mW 100V 1A 0.35pF Rs 4R0 MAX @ 100mA, MARKING CODE E0, LOW PROFILE,	HEWLETT-PACKARD	HSMP-3810-L31
D12	28335/670	DIODE BAND SWITCHING, BAT18... 35V 100mA 1pF MAX @ 20V, 1.2Vf @ 100mA, MARKING CODE A2, SURFACE	PHILIPS	BAT18/T1
D13	28383/932	DIODE PIN, HSMP-3810... 250mW 100V 1A 0.35pF Rs 4R0 MAX @ 100mA, MARKING CODE E0, LOW PROFILE,	HEWLETT-PACKARD	HSMP-3810-L31
D14 to D16	28335/670	DIODE BAND SWITCHING, BAT18... 35V 100mA 1pF MAX @ 20V, 1.2Vf @ 100mA, MARKING CODE A2, SURFACE	PHILIPS	BAT18/T1
D17 to D32	28383/932	DIODE PIN, HSMP-3810... 250mW 100V 1A 0.35pF Rs 4R0 MAX @ 100mA, MARKING CODE E0, LOW PROFILE,	HEWLETT-PACKARD	HSMP-3810-L31
D34	28335/670	DIODE BAND SWITCHING, BAT18... 35V 100mA 1pF MAX @ 20V, 1.2Vf @ 100mA, MARKING CODE A2, SURFACE	PHILIPS	BAT18/T1
D36	28335/670	DIODE BAND SWITCHING, BAT18... 35V 100mA 1pF MAX @ 20V, 1.2Vf @ 100mA, MARKING CODE A2, SURFACE	PHILIPS	BAT18/T1
D39	28383/932	DIODE PIN, HSMP-3810... 250mW 100V 1A 0.35pF Rs 4R0 MAX @ 100mA, MARKING CODE E0, LOW PROFILE,	HEWLETT-PACKARD	HSMP-3810-L31
D41 to D48	28335/670	DIODE BAND SWITCHING, BAT18... 35V 100mA 1pF MAX @ 20V, 1.2Vf @ 100mA, MARKING CODE A2, SURFACE	PHILIPS	BAT18/T1
D49	28383/932	DIODE PIN, HSMP-3810... 250mW 100V 1A 0.35pF Rs 4R0 MAX @ 100mA, MARKING CODE E0, LOW PROFILE,	HEWLETT-PACKARD	HSMP-3810-L31
D50	28383/932	DIODE PIN, HSMP-3810... 250mW 100V 1A 0.35pF Rs 4R0 MAX @ 100mA, MARKING CODE E0, LOW PROFILE,	HEWLETT-PACKARD	HSMP-3810-L31
D51 to D53	28335/670	DIODE BAND SWITCHING, BAT18... 35V 100mA 1pF MAX @ 20V, 1.2Vf @ 100mA, MARKING CODE A2, SURFACE	PHILIPS	BAT18/T1
IC2	28466/390	IC-DIGITAL NAND-GATE 74HC00... 2 INPUT, QUAD, CMOS-H/SPEED, 14 PIN, SMALL-OUTLINE.	PHILIPS	74HC00D
IC3	28465/065	IC-DIGITAL DECODER/DEMULTIPLEX 74HC154... 4-TO-16 LINE, CMOS-H/SPEED, 24 PIN, SMALL-OUTLINE.	PHILIPS	74HC154D
IC4 to IC6	28461/388	IC-ANALOGUE OPERATIONAL AMP LM324D... QUAD, GEN-PURPOSE, SLEW RATE 0.2V/uS MIN, GAIN BANDWIDTH	PHILIPS	LM324D
IC7	28469/566	IC-DIGITAL DIVIDER SP8402... DIVIDE BY 2 TO 256 SELECTABLE BY 2n, 1.5GHz, PHASE NOISE <160 dBc/Hz,	GEC PLESSEY SEMICOND	SP8402-KG-MPES

Cir. Ref.	MI part number	Description	Manufacturer	Manufacturer's part number
RF divider C3 (contd.)				
IC8	28461/388	IC-ANALOGUE OPERATIONAL AMP LM324D... QUAD, GEN-PURPOSE, SLEW RATE 0.2V/uS MIN, GAIN BANDWIDTH	PHILIPS	LM324D
IC9	28461/454	IC-ANALOGUE MICROWAVE-AMP MSA-0786... 4V 22mA GAIN 12.5dB @ 1GHz, 3dB BANDWIDTH DC-2GHz, BIPOLAR, 4	HEWLETT-PACKARD	MSA-0786-TR1
L1	23642/518	INDUCTOR-FIXED 0.56uH +/- 20% EPOXY-MOULD, 450mA 0R55 MAX, 30 Q @ 25.2 MHz, 180 MHz SRF, SURFACE	MEGGITT ELECTRONICS	3612-T-R56-M
L2	23642/518	INDUCTOR-FIXED 0.56uH +/- 20% EPOXY-MOULD, 450mA 0R55 MAX, 30 Q @ 25.2 MHz, 180 MHz SRF, SURFACE	MEGGITT ELECTRONICS	3612-T-R56-M
L8	23642/714	INDUCTOR-FIXED 1.5uH +/- 5% EPOXY-MOULD, 370mA 0R85 MAX, 30 Q @ 7.96 MHz, 85 MHz SRF, SURFACE	MEGGITT ELECTRONICS	3612-T-1R5-J
L9 to L19	23642/518	INDUCTOR-FIXED 0.56uH +/- 20% EPOXY-MOULD, 450mA 0R55 MAX, 30 Q @ 25.2 MHz, 180 MHz SRF, SURFACE	MEGGITT ELECTRONICS	3612-T-R56-M
L22	23642/714	INDUCTOR-FIXED 1.5uH +/- 5% EPOXY-MOULD, 370mA 0R85 MAX, 30 Q @ 7.96 MHz, 85 MHz SRF, SURFACE	MEGGITT ELECTRONICS	3612-T-1R5-J
L25	23642/714	INDUCTOR-FIXED 1.5uH +/- 5% EPOXY-MOULD, 370mA 0R85 MAX, 30 Q @ 7.96 MHz, 85 MHz SRF, SURFACE	MEGGITT ELECTRONICS	3612-T-1R5-J
L26	23642/515	INDUCTOR-FIXED 0.033uH +/- 5% EPOXY-MOULD, 450mA 0R24 MAX, 25 Q @ 100 MHz, 1.4K MHz SRF, SURFACE	MEGGITT ELECTRONICS	3612-T-033-J
L27 to L31	23642/714	INDUCTOR-FIXED 1.5uH +/- 5% EPOXY-MOULD, 370mA 0R85 MAX, 30 Q @ 7.96 MHz, 85 MHz SRF, SURFACE	MEGGITT ELECTRONICS	3612-T-1R5-J
L32	23642/517	INDUCTOR-FIXED 0.047uH +/- 5% EPOXY-MOULD, 450mA 0R3 MAX, 26 Q @ 100 MHz, 1.2K MHz SRF, SURFACE	MEGGITT ELECTRONICS	3612-T-047-J
L33	23642/515	INDUCTOR-FIXED 0.033uH +/- 5% EPOXY-MOULD, 450mA 0R24 MAX, 25 Q @ 100 MHz, 1.4K MHz SRF, SURFACE	MEGGITT ELECTRONICS	3612-T-033-J
L34	23642/714	INDUCTOR-FIXED 1.5uH +/- 5% EPOXY-MOULD, 370mA 0R85 MAX, 30 Q @ 7.96 MHz, 85 MHz SRF, SURFACE	MEGGITT ELECTRONICS	3612-T-1R5-J
L37	23642/519	INDUCTOR-FIXED 0.068uH +/- 5% EPOXY-MOULD, 450mA 0R36 MAX, 27 Q @ 100 MHz, 1K MHz SRF, SURFACE	MEGGITT ELECTRONICS	3612-T-068-J
L38	23642/517	INDUCTOR-FIXED 0.047uH +/- 5% EPOXY-MOULD, 450mA 0R3 MAX, 26 Q @ 100 MHz, 1.2K MHz SRF, SURFACE	MEGGITT ELECTRONICS	3612-T-047-J
L39	23642/714	INDUCTOR-FIXED 1.5uH +/- 5% EPOXY-MOULD, 370mA 0R85 MAX, 30 Q @ 7.96 MHz, 85 MHz SRF, SURFACE	MEGGITT ELECTRONICS	3612-T-1R5-J
L40	23642/714	INDUCTOR-FIXED 1.5uH +/- 5% EPOXY-MOULD, 370mA 0R85 MAX, 30 Q @ 7.96 MHz, 85 MHz SRF, SURFACE	MEGGITT ELECTRONICS	3612-T-1R5-J
L46	23642/701	INDUCTOR-FIXED 2.2uH +/- 5% EPOXY-MOULD, 320mA 1R MAX, 30 Q @ 7.96 MHz, 75 MHz SRF, SURFACE MOUNTED,	MEGGITT ELECTRONICS	3612-T-2R2-J
L48	23642/727	INDUCTOR-FIXED 33uH +/- 10% EPOXY-MOULD, 300mA 1R4 MAX, 10 Q @ 2.52 MHz, 14 MHz SRF, SURFACE MOUNTED,	TDK UK LTD	NLC453232T-330K
L49	23642/701	INDUCTOR-FIXED 2.2uH +/- 5% EPOXY-MOULD, 320mA 1R MAX, 30 Q @ 7.96 MHz, 75 MHz SRF, SURFACE MOUNTED,	MEGGITT ELECTRONICS	3612-T-2R2-J
L50	23642/712	INDUCTOR-FIXED 0.082uH +/- 5% EPOXY-MOULD, 450mA 0R4 MAX, 27 Q @ 100 MHz, 900 MHz SRF, SURFACE	MEGGITT ELECTRONICS	3612-T-082-J
L51	23642/713	INDUCTOR-FIXED 0.056uH +/- 5% EPOXY-MOULD, 450mA 0R33 MAX, 26 Q @ 100 MHz, 1.1K MHz SRF, SURFACE	MEGGITT ELECTRONICS	3612-T-056-J
L54	23642/518	INDUCTOR-FIXED 0.56uH +/- 20% EPOXY-MOULD, 450mA 0R55 MAX, 30 Q @ 25.2 MHz, 180 MHz SRF, SURFACE	MEGGITT ELECTRONICS	3612-T-R56-M
L55	23642/518	INDUCTOR-FIXED 0.56uH +/- 20% EPOXY-MOULD, 450mA 0R55 MAX, 30 Q @ 25.2 MHz, 180 MHz SRF, SURFACE	MEGGITT ELECTRONICS	3612-T-R56-M

Clr. Ref.	MI part number	Description	Manufacturer	Manufacturer's part number
RF divider	**C3 (contd.)**			
R3	24811/205	RESISTOR-FIXED METAL-FILM 22K1 +/- 1% 250mW 200V 50 ppm/DEG.C, SURFACE MOUNTED, SIZE MINI-MELF,	VISHAY COMPONENTS	SMM0204-22K1-1%50ppm
R4	24811/197	RESISTOR-FIXED METAL-FILM 10K +/- 1% 250mW 200V 50 ppm/DEG.C, SURFACE MOUNTED, SIZE MINI-MELF, (8mm	VISHAY COMPONENTS	SMM0204-10K-1%50ppm
R5	24811/165	RESISTOR-FIXED METAL-FILM 475R +/- 1% 250mW 200V 50 ppm/DEG.C, SURFACE MOUNTED, SIZE MINI-MELF,	VISHAY COMPONENTS	SMM0204-475R-1%50ppm
R6	24811/197	RESISTOR-FIXED METAL-FILM 10K +/- 1% 250mW 200V 50 ppm/DEG.C, SURFACE MOUNTED, SIZE MINI-MELF, (8mm	VISHAY COMPONENTS	SMM0204-10K-1%50ppm
R7	24811/165	RESISTOR-FIXED METAL-FILM 475R +/- 1% 250mW 200V 50 ppm/DEG.C, SURFACE MOUNTED, SIZE MINI-MELF,	VISHAY COMPONENTS	SMM0204-475R-1%50ppm
R8	24811/173	RESISTOR-FIXED METAL-FILM 1K +/- 1% 250mW 200V 50 ppm/DEG.C, SURFACE MOUNTED, SIZE MINI-MELF, (8mm	VISHAY COMPONENTS	SMM0204-1K0-1%-50ppm
R9	24811/915	RESISTOR-FIXED METAL-FILM 150R +/- 1% 250mW 200V 50 ppm/DEG.C, LOW-INDUCTANCE, SURFACE MOUNTED,	VISHAY COMPONENTS	SMM0204-HF-150R-1%
R10	24811/173	RESISTOR-FIXED METAL-FILM 1K +/- 1% 250mW 200V 50 ppm/DEG.C, SURFACE MOUNTED, SIZE MINI-MELF, (8mm	VISHAY COMPONENTS	SMM0204-1K0-1%-50ppm
R11	24811/165	RESISTOR-FIXED METAL-FILM 475R +/- 1% 250mW 200V 50 ppm/DEG.C, SURFACE MOUNTED, SIZE MINI-MELF,	VISHAY COMPONENTS	SMM0204-475R-1%50ppm
R12	24811/173	RESISTOR-FIXED METAL-FILM 1K +/- 1% 250mW 200V 50 ppm/DEG.C, SURFACE MOUNTED, SIZE MINI-MELF, (8mm	VISHAY COMPONENTS	SMM0204-1K0-1%-50ppm
R13	24811/142	RESISTOR-FIXED METAL-FILM 51R1 +/- 1% 250mW 200V 50 ppm/DEG.C, SURFACE MOUNTED, SIZE MINI-MELF,	VISHAY COMPONENTS	SMM0204-51R1-1%50ppm
R14	24811/161	RESISTOR-FIXED METAL-FILM 332R +/- 1% 250mW 200V 50 ppm/DEG.C, SURFACE MOUNTED, SIZE MINI-MELF,	VISHAY COMPONENTS	SMM0204-332R-1%50ppm
R15	24811/161	RESISTOR-FIXED METAL-FILM 332R +/- 1% 250mW 200V 50 ppm/DEG.C, SURFACE MOUNTED, SIZE MINI-MELF,	VISHAY COMPONENTS	SMM0204-332R-1%50ppm
R16	24811/914	RESISTOR-FIXED METAL-FILM 130R +/- 1% 250mW 200V 50 ppm/DEG.C, LOW-INDUCTANCE, SURFACE MOUNTED,	VISHAY COMPONENTS	SMM0204-HF-130R-1%
R17	24811/908	RESISTOR-FIXED METAL-FILM 43R2 +/- 1% 250mW 200V 50 ppm/DEG.C, LOW-INDUCTANCE, SURFACE MOUNTED,	VISHAY COMPONENTS	SMM0204-HF-43R2-1%
R18	24811/923	RESISTOR-FIXED METAL-FILM 68R1 +/- 1% 250mW 200V 50 ppm/DEG.C, LOW-INDUCTANCE, SURFACE MOUNTED,	VISHAY COMPONENTS	SMM0204-HF-68R1-1%
R19	24811/165	RESISTOR-FIXED METAL-FILM 475R +/- 1% 250mW 200V 50 ppm/DEG.C, SURFACE MOUNTED, SIZE MINI-MELF,	VISHAY COMPONENTS	SMM0204-475R-1%50ppm
R20	24811/184	RESISTOR-FIXED METAL-FILM 3K01 +/- 1% 250mW 200V 50 ppm/DEG.C, SURFACE MOUNTED, SIZE MINI-MELF,	VISHAY COMPONENTS	SMM0204-3K01-1%50ppm
R21	24811/173	RESISTOR-FIXED METAL-FILM 1K +/- 1% 250mW 200V 50 ppm/DEG.C, SURFACE MOUNTED, SIZE MINI-MELF, (8mm	VISHAY COMPONENTS	SMM0204-1K0-1%-50ppm
R22	24811/165	RESISTOR-FIXED METAL-FILM 475R +/- 1% 250mW 200V 50 ppm/DEG.C, SURFACE MOUNTED, SIZE MINI-MELF,	VISHAY COMPONENTS	SMM0204-475R-1%50ppm
R23	24811/173	RESISTOR-FIXED METAL-FILM 1K +/- 1% 250mW 200V 50 ppm/DEG.C, SURFACE MOUNTED, SIZE MINI-MELF, (8mm	VISHAY COMPONENTS	SMM0204-1K0-1%-50ppm
R24	24811/165	RESISTOR-FIXED METAL-FILM 475R +/- 1% 250mW 200V 50 ppm/DEG.C, SURFACE MOUNTED, SIZE MINI-MELF,	VISHAY COMPONENTS	SMM0204-475R-1%50ppm
R25	24811/173	RESISTOR-FIXED METAL-FILM 1K +/- 1% 250mW 200V 50 ppm/DEG.C, SURFACE MOUNTED, SIZE MINI-MELF, (8mm	VISHAY COMPONENTS	SMM0204-1K0-1%-50ppm
R26	24811/165	RESISTOR-FIXED METAL-FILM 475R +/- 1% 250mW 200V 50 ppm/DEG.C, SURFACE MOUNTED, SIZE MINI-MELF,	VISHAY COMPONENTS	SMM0204-475R-1%50ppm
R27	24811/173	RESISTOR-FIXED METAL-FILM 1K +/- 1% 250mW 200V 50 ppm/DEG.C, SURFACE MOUNTED, SIZE MINI-MELF, (8mm	VISHAY COMPONENTS	SMM0204-1K0-1%-50ppm
R28	24811/165	RESISTOR-FIXED METAL-FILM 475R +/- 1% 250mW 200V 50 ppm/DEG.C, SURFACE MOUNTED, SIZE MINI-MELF,	VISHAY COMPONENTS	SMM0204-475R-1%50ppm

Cir. Ref.	MI part number	Description	Manufacturer	Manufacturer's part number
RF divider	**C3 (contd.)**			
R29	24811/165	RESISTOR-FIXED METAL-FILM 475R +/- 1% 250mW 200V 50 ppm/DEG.C, SURFACE MOUNTED, SIZE MINI-MELF,	VISHAY COMPONENTS	SMM0204-475R-1%50ppm
R30	24811/153	RESISTOR-FIXED METAL-FILM 150R +/- 1% 250mW 200V 50 ppm/DEG.C, SURFACE MOUNTED, SIZE MINI-MELF,	VISHAY COMPONENTS	SMM0204-150R-1%50ppm
R31	24811/146	RESISTOR-FIXED METAL-FILM 75R +/- 1% 250mW 200V 50 ppm/DEG.C, SURFACE MOUNTED, SIZE MINI-MELF, (8mm	VISHAY COMPONENTS	SMM0204-75R0-1%50ppm
R32	24811/165	RESISTOR-FIXED METAL-FILM 475R +/- 1% 250mW 200V 50 ppm/DEG.C, SURFACE MOUNTED, SIZE MINI-MELF,	VISHAY COMPONENTS	SMM0204-475R-1%50ppm
R33	24811/918	RESISTOR-FIXED METAL-FILM 12R1 +/- 1% 250mW 200V 50 ppm/DEG.C, LOW-INDUCTANCE, SURFACE MOUNTED,	VISHAY COMPONENTS	SMM0204-HF-12R1-1%
R34	24811/901	RESISTOR-FIXED METAL-FILM 10R +/- 1% 250mW 200V 50 ppm/DEG.C, LOW-INDUCTANCE, SURFACE MOUNTED, SIZE	VISHAY COMPONENTS	SMM0204-HF-10R-1%
R35	24811/197	RESISTOR-FIXED METAL-FILM 10K +/- 1% 250mW 200V 50 ppm/DEG.C, SURFACE MOUNTED, SIZE MINI-MELF, (8mm	VISHAY COMPONENTS	SMM0204-10K-1%50ppm
R36	24811/149	RESISTOR-FIXED METAL-FILM 100R +/- 1% 250mW 200V 50 ppm/DEG.C, SURFACE MOUNTED, SIZE MINI-MELF,	VISHAY COMPONENTS	SMM0204-100R-1%50ppm
R37	24811/165	RESISTOR-FIXED METAL-FILM 475R +/- 1% 250mW 200V 50 ppm/DEG.C, SURFACE MOUNTED, SIZE MINI-MELF,	VISHAY COMPONENTS	SMM0204-475R-1%50ppm
R38	24811/173	RESISTOR-FIXED METAL-FILM 1K +/- 1% 250mW 200V 50 ppm/DEG.C, SURFACE MOUNTED, SIZE MINI-MELF, (8mm	VISHAY COMPONENTS	SMM0204-1K0-1%-50ppm
R39	24811/165	RESISTOR-FIXED METAL-FILM 475R +/- 1% 250mW 200V 50 ppm/DEG.C, SURFACE MOUNTED, SIZE MINI-MELF,	VISHAY COMPONENTS	SMM0204-475R-1%50ppm
R40	24811/173	RESISTOR-FIXED METAL-FILM 1K +/- 1% 250mW 200V 50 ppm/DEG.C, SURFACE MOUNTED, SIZE MINI-MELF, (8mm	VISHAY COMPONENTS	SMM0204-1K0-1%-50ppm
R41	24811/173	RESISTOR-FIXED METAL-FILM 1K +/- 1% 250mW 200V 50 ppm/DEG.C, SURFACE MOUNTED, SIZE MINI-MELF, (8mm	VISHAY COMPONENTS	SMM0204-1K0-1%-50ppm
R42	24811/165	RESISTOR-FIXED METAL-FILM 475R +/- 1% 250mW 200V 50 ppm/DEG.C, SURFACE MOUNTED, SIZE MINI-MELF,	VISHAY COMPONENTS	SMM0204-475R-1%50ppm
R43	24811/173	RESISTOR-FIXED METAL-FILM 1K +/- 1% 250mW 200V 50 ppm/DEG.C, SURFACE MOUNTED, SIZE MINI-MELF, (8mm	VISHAY COMPONENTS	SMM0204-1K0-1%-50ppm
R44	24811/165	RESISTOR-FIXED METAL-FILM 475R +/- 1% 250mW 200V 50 ppm/DEG.C, SURFACE MOUNTED, SIZE MINI-MELF,	VISHAY COMPONENTS	SMM0204-475R-1%50ppm
R49	24811/923	RESISTOR-FIXED METAL-FILM 68R1 +/- 1% 250mW 200V 50 ppm/DEG.C, LOW-INDUCTANCE, SURFACE MOUNTED,	VISHAY COMPONENTS	SMM0204-HF-68R1-1%
R50	24811/914	RESISTOR-FIXED METAL-FILM 130R +/- 1% 250mW 200V 50 ppm/DEG.C, LOW-INDUCTANCE, SURFACE MOUNTED,	VISHAY COMPONENTS	SMM0204-HF-130R-1%
R51	24811/165	RESISTOR-FIXED METAL-FILM 475R +/- 1% 250mW 200V 50 ppm/DEG.C, SURFACE MOUNTED, SIZE MINI-MELF,	VISHAY COMPONENTS	SMM0204-475R-1%50ppm
R52	24811/161	RESISTOR-FIXED METAL-FILM 332R +/- 1% 250mW 200V 50 ppm/DEG.C, SURFACE MOUNTED, SIZE MINI-MELF,	VISHAY COMPONENTS	SMM0204-332R-1%50ppm
T1	43590/232	WOUND-PART TRANSFORMER, RING-CORE, 6:6 TURNS, TWISTED BIFILAR WOUND, MOUNTED ON 6-PIN TOROID	AMETHYST DESIGNS LTD	AD5313
TR1	28453/829	TRANSISTOR NPN BIPOLAR BC848B... 30V 200MHz 200mW 100mA 290hFE @ 2mA, NOISE 2dB @ 1KHz, MARKING CODE	PHILIPS	BC848B
TR2	28487/809	TRANSISTOR NPN BIPOLAR BFR93A... 12V 5GHz 250mW 35mA 40hFE MIN @ 30mA, MARKING CODE R2, SURFACE	PHILIPS	BFR93A
TR3	28453/829	TRANSISTOR NPN BIPOLAR BC848B... 30V 200MHz 200mW 100mA 290hFE @ 2mA, NOISE 2dB @ 1KHz, MARKING CODE	PHILIPS	BC848B

Cir. Ref.	MI part number	Description	Manufacturer	Manufacturer's part number

Bypass board C4

When ordering, prefix circuit reference with C4.

	44830/106	Complete unit	Issue 001	
C1 to C9	26386/875	CAPACITOR-FIXED CERAMIC 10nF +/-10% 50V X7R/2C1, MULTILAYER, SURFACE-MOUNTED, SIZE 0805, NICKEL	ROHM ELECTRONICS LTD	MCH21-5C-103-KP
C10 to C13	26386/899	CAPACITOR-FIXED CERAMIC 100nF +/-10% 50V X7R/2C1, MULTILAYER, SURFACE-MOUNTED, SIZE 1206, NICKEL	ROHM ELECTRONICS LTD	MCH31-5C-104-KP
C14	26386/760	CAPACITOR-FIXED CERAMIC 220nF +/-10% 50V X7R MULTILAYER, SURFACE-MOUNTED, SIZE 1210, NICKEL	PHILIPS	1210-2R-224-K9-BBC
C15	26386/760	CAPACITOR-FIXED CERAMIC 220nF +/-10% 50V X7R MULTILAYER, SURFACE-MOUNTED, SIZE 1210, NICKEL	PHILIPS	1210-2R-224-K9-BBC
C16	26386/875	CAPACITOR-FIXED CERAMIC 10nF +/-10% 50V X7R/2C1, MULTILAYER, SURFACE-MOUNTED, SIZE 0805, NICKEL	ROHM ELECTRONICS LTD	MCH21-5C-103-KP
C17 to C20	26386/760	CAPACITOR-FIXED CERAMIC 220nF +/-10% 50V X7R MULTILAYER, SURFACE-MOUNTED, SIZE 1210, NICKEL	PHILIPS	1210-2R-224-K9-BBC
D1 to D4	28383/962	DIODE PIN, BAR60... TRIPLE, 100V 0.25pF 1.05Vf @ 100mA, T-CIRCUIT, MARKING CODE 60, SURFACE	SIEMENS LTD	BAR60
D5 to D7	28383/932	DIODE PIN, HSMP-3810... 250mW 100V 1A 0.35pF Rs 4R0 MAX @ 100mA, MARKING CODE E0, LOW PROFILE,	HEWLETT-PACKARD	HSMP-3810-L31
L1 to L4	23642/511	INDUCTOR-FIXED 0.12uH +/- 20% EPOXY-MOULD, 450mA 0R22 MAX, 30 Q @ 25.2 MHz, 500 MHz SRF, SURFACE	MEGGITT ELECTRONICS	3612-T-R12-M
L5	23642/726	INDUCTOR-FIXED 100uH +/- 10% EPOXY-MOULD, 110mA 5R6 MAX, 20 Q @ 0.796 MHz, 8.5 MHz SRF, SURFACE	MEGGITT ELECTRONICS	3613-A-101-K
L6	23642/726	INDUCTOR-FIXED 100uH +/- 10% EPOXY-MOULD, 110mA 5R6 MAX, 20 Q @ 0.796 MHz, 8.5 MHz SRF, SURFACE	MEGGITT ELECTRONICS	3613-A-101-K
R1	24811/162	RESISTOR-FIXED METAL-FILM 365R +/- 1% 250mW 200V 50 ppm/DEG.C, SURFACE MOUNTED, SIZE MINI-MELF,	VISHAY COMPONENTS	SMM0204-365R-1%50ppm
R2	24811/155	RESISTOR-FIXED METAL-FILM 182R +/- 1% 250mW 200V 50 ppm/DEG.C, SURFACE MOUNTED, SIZE MINI-MELF,	VISHAY COMPONENTS	SMM0204-182R-1%50ppm
R3 to R5	24811/162	RESISTOR-FIXED METAL-FILM 365R +/- 1% 250mW 200V 50 ppm/DEG.C, SURFACE MOUNTED, SIZE MINI-MELF,	VISHAY COMPONENTS	SMM0204-365R-1%50ppm
R6	24811/155	RESISTOR-FIXED METAL-FILM 182R +/- 1% 250mW 200V 50 ppm/DEG.C, SURFACE MOUNTED, SIZE MINI-MELF,	VISHAY COMPONENTS	SMM0204-182R-1%50ppm
R7	24811/162	RESISTOR-FIXED METAL-FILM 365R +/- 1% 250mW 200V 50 ppm/DEG.C, SURFACE MOUNTED, SIZE MINI-MELF,	VISHAY COMPONENTS	SMM0204-365R-1%50ppm
R8	24811/928	RESISTOR-FIXED METAL-FILM 121R +/- 1% 250mW 200V 50 ppm/DEG.C, LOW-INDUCTANCE, SURFACE MOUNTED,	VISHAY COMPONENTS	SMM0204-HF-121R-1%
R9	24811/909	RESISTOR-FIXED METAL-FILM 51R1 +/- 1% 250mW 200V 50 ppm/DEG.C, LOW-INDUCTANCE, SURFACE MOUNTED,	VISHAY COMPONENTS	SMM0204-HF-51R1-1%
R10	24811/928	RESISTOR-FIXED METAL-FILM 121R +/- 1% 250mW 200V 50 ppm/DEG.C, LOW-INDUCTANCE, SURFACE MOUNTED,	VISHAY COMPONENTS	SMM0204-HF-121R-1%
R11	24811/162	RESISTOR-FIXED METAL-FILM 365R +/- 1% 250mW 200V 50 ppm/DEG.C, SURFACE MOUNTED, SIZE MINI-MELF,	VISHAY COMPONENTS	SMM0204-365R-1%50ppm

Cir. Ref.	MI part number	Description	Manufacturer	Manufacturer's part number
Bypass board C4 (contd.)				
R12	24811/162	RESISTOR-FIXED METAL-FILM 365R +/- 1% 250mW 200V 50 ppm/DEG.C, SURFACE MOUNTED, SIZE MINI-MELF,	VISHAY COMPONENTS	SMM0204-365R-1%50ppm
R13	24811/155	RESISTOR-FIXED METAL-FILM 182R +/- 1% 250mW 200V 50 ppm/DEG.C, SURFACE MOUNTED, SIZE MINI-MELF,	VISHAY COMPONENTS	SMM0204-182R-1%50ppm
R14	24811/162	RESISTOR-FIXED METAL-FILM 365R +/- 1% 250mW 200V 50 ppm/DEG.C, SURFACE MOUNTED, SIZE MINI-MELF,	VISHAY COMPONENTS	SMM0204-365R-1%50ppm
R15	24811/162	RESISTOR-FIXED METAL-FILM 365R +/- 1% 250mW 200V 50 ppm/DEG.C, SURFACE MOUNTED, SIZE MINI-MELF,	VISHAY COMPONENTS	SMM0204-365R-1%50ppm
R16	24811/162	RESISTOR-FIXED METAL-FILM 365R +/- 1% 250mW 200V 50 ppm/DEG.C, SURFACE MOUNTED, SIZE MINI-MELF,	VISHAY COMPONENTS	SMM0204-365R-1%50ppm
R17	24811/162	RESISTOR-FIXED METAL-FILM 365R +/- 1% 250mW 200V 50 ppm/DEG.C, SURFACE MOUNTED, SIZE MINI-MELF,	VISHAY COMPONENTS	SMM0204-365R-1%50ppm

Cir. Ref.	MI part number	Description	Manufacturer	Manufacturer's part number

BFO C5

When ordering, prefix circuit reference with C5.

	44830-107	Complete unit	Issue 003	
C1	26386/899	CAPACITOR-FIXED CERAMIC 100nF +/-10% 50V X7R/2C1, MULTILAYER, SURFACE-MOUNTED, SIZE 1206, NICKEL	ROHM ELECTRONICS LTD	MCH31-5C-104-KP
C2	26386/875	CAPACITOR-FIXED CERAMIC 10nF +/-10% 50V X7R/2C1, MULTILAYER, SURFACE-MOUNTED, SIZE 0805, NICKEL	ROHM ELECTRONICS LTD	MCH21-5C-103-KP
C3	26451/009	CAPACITOR-FIXED ALUMINIUM 47uF +/-20% 16V ELECTROLYTIC, SURFACE-MOUNTED, SIZE 6.6 x 6.6mm,	PANASONIC INDUSTRIAL	ECE-V-1CA-470P
C4	26386/899	CAPACITOR-FIXED CERAMIC 100nF +/-10% 50V X7R/2C1, MULTILAYER, SURFACE-MOUNTED, SIZE 1206, NICKEL	ROHM ELECTRONICS LTD	MCH31-5C-104-KP
C5 to C8	26386/875	CAPACITOR-FIXED CERAMIC 10nF +/-10% 50V X7R/2C1, MULTILAYER, SURFACE-MOUNTED, SIZE 0805, NICKEL	ROHM ELECTRONICS LTD	MCH21-5C-103-KP
C9	26386/899	CAPACITOR-FIXED CERAMIC 100nF +/-10% 50V X7R/2C1, MULTILAYER, SURFACE-MOUNTED, SIZE 1206, NICKEL	ROHM ELECTRONICS LTD	MCH31-5C-104-KP
C10	26386/899	CAPACITOR-FIXED CERAMIC 100nF +/-10% 50V X7R/2C1, MULTILAYER, SURFACE-MOUNTED, SIZE 1206, NICKEL	ROHM ELECTRONICS LTD	MCH31-5C-104-KP
C11	26451/009	CAPACITOR-FIXED ALUMINIUM 47uF +/-20% 16V ELECTROLYTIC, SURFACE-MOUNTED, SIZE 6.6 x 6.6mm,	PANASONIC INDUSTRIAL	ECE-V-1CA-470P
C12	26386/899	CAPACITOR-FIXED CERAMIC 100nF +/-10% 50V X7R/2C1, MULTILAYER, SURFACE-MOUNTED, SIZE 1206, NICKEL	ROHM ELECTRONICS LTD	MCH31-5C-104-KP
C13 to C15	26386/875	CAPACITOR-FIXED CERAMIC 10nF +/-10% 50V X7R/2C1, MULTILAYER, SURFACE-MOUNTED, SIZE 0805, NICKEL	ROHM ELECTRONICS LTD	MCH21-5C-103-KP
C16	26386/764	CAPACITOR-FIXED CERAMIC 47pF +/-5% 50V 60 ppm/DEG.C, HIGH-Q, SINGLELAYER, SURFACE-MOUNTED,	AVX LTD	0805-5K-470-JAW
C17	26386/973	CAPACITOR-FIXED CERAMIC 3.3pF +/-0.1pF 50V 60 ppm/DEG.C, HIGH-Q, SINGLELAYER, SURFACE-MOUNTED,	AVX LTD	0805-5K-3R3-BAW-TR
C18	26386/971	CAPACITOR-FIXED CERAMIC 2.2pF +/-0.1pF 50V 60 ppm/DEG.C, HIGH-Q, SINGLELAYER, SURFACE-MOUNTED,	AVX LTD	0805-5K-2R2-BAW-TR
C19	26386/780	CAPACITOR-FIXED CERAMIC 82pF +/-5% 25V 60 ppm/DEG.C, HIGH-Q, SINGLELAYER, SURFACE-MOUNTED,	AVX LTD	0805-3K-820-JAW
C20	26386/897	CAPACITOR-FIXED CERAMIC 4.7pF +/-0.1pF 50V 60 ppm/DEG.C, HIGH-Q, SINGLELAYER, SURFACE-MOUNTED,	AVX LTD	0805-5K4R7-BAW-TR
C21	26386/764	CAPACITOR-FIXED CERAMIC 47pF +/-5% 50V 60 ppm/DEG.C, HIGH-Q, SINGLELAYER, SURFACE-MOUNTED,	AVX LTD	0805-5K-470-JAW
C22	26386/973	CAPACITOR-FIXED CERAMIC 3.3pF +/-0.1pF 50V 60 ppm/DEG.C, HIGH-Q, SINGLELAYER, SURFACE-MOUNTED,	AVX LTD	0805-5K-3R3-BAW-TR
C23	26386/762	CAPACITOR-FIXED CERAMIC 22pF +/-5% 50V 60 ppm/DEG.C, HIGH-Q, SINGLELAYER, SURFACE-MOUNTED,	AVX LTD	0805-5K-220-JAW
C24	26386/969	CAPACITOR-FIXED CERAMIC 1pF +/- 0.1pF 50V 60 ppm/DEG.C, HIGH-Q, SINGLELAYER, SURFACE-MOUNTED,	AVX LTD	0805-5K-1R0-BAW-TR
C25	26386/762	CAPACITOR-FIXED CERAMIC 22pF +/-5% 50V 60 ppm/DEG.C, HIGH-Q, SINGLELAYER, SURFACE-MOUNTED,	AVX LTD	0805-5K-220-JAW
C26	26386/973	CAPACITOR-FIXED CERAMIC 3.3pF +/-0.1pF 50V 60 ppm/DEG.C, HIGH-Q, SINGLELAYER, SURFACE-MOUNTED,	AVX LTD	0805-5K-3R3-BAW-TR
C27	26386/766	CAPACITOR-FIXED CERAMIC 15pF +/-5% 100V 60 ppm/DEG.C, HIGH-Q, SINGLELAYER, SURFACE-MOUNTED,	AVX LTD	0805-1K-150-JAW-TR
C28	26386/875	CAPACITOR-FIXED CERAMIC 10nF +/-10% 50V X7R/2C1, MULTILAYER, SURFACE-MOUNTED, SIZE 0805, NICKEL	ROHM ELECTRONICS LTD	MCH21-5C-103-KP

Cir. Ref.	MI part number	Description	Manufacturer	Manufacturer's part number
BFO C5 (contd.)				
IC1	28531/015	RF-MIXER DOUBLE-BALANCED, DIODE RING, RMS-2... 5-1000MHz, 50R 1 dBm RF-1dB COMPRESS, 9.5 dB LOSS,	MINI-CIRCUITS	RMS-2
IC2	28461/447	IC-ANALOGUE MICROWAVE-AMP MSA-0886... 7.8V 36mA GAIN 22.5dB @1GHz, 25dB BNDWIDTH DC-5GHz, BIPOLAR,	HEWLETT-PACKARD	MSA-0886-TR1
IC3	28469/563	IC-DIGITAL DIVIDER uPB585G... DIVIDE BY 4, 2.5GHz, PRESCALER, MONOLITHIC, 8 PIN, SMALL-OUTLINE.	NEC ELECTRONICS LTD	uPB585G
IC4	28461/450	IC-ANALOGUE MICROWAVE-AMP MSA-0486... 5.25V 50mA GAIN 8dB @ 1GHz, 3dB BANDWIDTH DC-3.2GHz, BIPOLAR,	HEWLETT-PACKARD	MSA-0486-TR1
L1	23642/516	INDUCTOR-FIXED 0.022uH +/- 10% EPOXY-MOULD, 450mA 0R2 MAX, 23 Q @ 100 MHz, 1.7K MHz SRF, SURFACE	MEGGITT ELECTRONICS	3612-T-022-K
L2	23642/728	INDUCTOR-FIXED 68uH +/- 10% EPOXY-MOULD, 220mA 2R6 MAX, 10 Q @ 2.52 MHz, 10 MHz SRF, SURFACE MOUNTED,	TDK UK LTD	NLC453232T-680K
L3	23642/516	INDUCTOR-FIXED 0.022uH +/- 10% EPOXY-MOULD, 450mA 0R2 MAX, 23 Q @ 100 MHz, 1.7K MHz SRF, SURFACE	MEGGITT ELECTRONICS	3612-T-022-K
L4	23642/728	INDUCTOR-FIXED 68uH +/- 10% EPOXY-MOULD, 220mA 2R6 MAX, 10 Q @ 2.52 MHz, 10 MHz SRF, SURFACE MOUNTED,	TDK UK LTD	NLC453232T-680K
L5	23642/511	INDUCTOR-FIXED 0.12uH +/- 20% EPOXY-MOULD, 450mA 0R22 MAX, 30 Q @ 25.2 MHz, 500 MHz SRF, SURFACE	MEGGITT ELECTRONICS	3612-T-R12-M
L6	23642/511	INDUCTOR-FIXED 0.12uH +/- 20% EPOXY-MOULD, 450mA 0R22 MAX, 30 Q @ 25.2 MHz, 500 MHz SRF, SURFACE	MEGGITT ELECTRONICS	3612-T-R12-M
L7	23642/519	INDUCTOR-FIXED 0.068uH +/- 5% EPOXY-MOULD, 450mA 0R36 MAX, 27 Q @ 100 MHz, 1K MHz SRF, SURFACE	MEGGITT ELECTRONICS	3612-T-068-J
L8	23642/516	INDUCTOR-FIXED 0.022uH +/- 10% EPOXY-MOULD, 450mA 0R2 MAX, 23 Q @ 100 MHz, 1.7K MHz SRF, SURFACE	MEGGITT ELECTRONICS	3612-T-022-K
R1	24811/141	RESISTOR-FIXED METAL-FILM 47R5 +/- 1% 250mW 200V 50 ppm/DEG.C, SURFACE MOUNTED, SIZE MINI-MELF,	VISHAY COMPONENTS	SMM0204-47R5-1%50ppm
R2	24811/150	RESISTOR-FIXED METAL-FILM 110R +/- 1% 250mW 200V 50 ppm/DEG.C, SURFACE MOUNTED, SIZE MINI-MELF,	VISHAY COMPONENTS	SMM0204-110R-1%50ppm
R3	24811/151	RESISTOR-FIXED METAL-FILM 121R +/- 1% 250mW 200V 50 ppm/DEG.C, SURFACE MOUNTED, SIZE MINI-MELF,	VISHAY COMPONENTS	SMM0204-121R-1%50ppm
R4	24811/142	RESISTOR-FIXED METAL-FILM 51R1 +/- 1% 250mW 200V 50 ppm/DEG.C, SURFACE MOUNTED, SIZE MINI-MELF,	VISHAY COMPONENTS	SMM0204-51R1-1%50ppm
R5	24811/151	RESISTOR-FIXED METAL-FILM 121R +/- 1% 250mW 200V 50 ppm/DEG.C, SURFACE MOUNTED, SIZE MINI-MELF,	VISHAY COMPONENTS	SMM0204-121R-1%50ppm
R6	24811/153	RESISTOR-FIXED METAL-FILM 150R +/- 1% 250mW 200V 50 ppm/DEG.C, SURFACE MOUNTED, SIZE MINI-MELF,	VISHAY COMPONENTS	SMM0204-150R-1%50ppm
R7	24811/156	RESISTOR-FIXED METAL-FILM 200R +/- 1% 250mW 200V 50 ppm/DEG.C, SURFACE MOUNTED, SIZE MINI-MELF,	VISHAY COMPONENTS	SMM0204-200R-1%50ppm

Cir. Ref.	MI part number	Description	Manufacturer	Manufacturer's part number
RF tray interconnection PCB (signal generator)				**C6**
		When ordering, prefix circuit reference with C6.		
	44830-108	Complete unit	Issue 003	
C1 to C4	26386/875	CAPACITOR-FIXED CERAMIC 10nF +/-10% 50V X7R/2C1, MULTILAYER, SURFACE-MOUNTED, SIZE 0805, NICKEL	ROHM ELECTRONICS LTD	MCH21-5C-103-KP
C5 to C8	26451/009	CAPACITOR-FIXED ALUMINIUM 47uF +/-20% 16V ELECTROLYTIC, SURFACE-MOUNTED, SIZE 6.6 x 6.6mm,	PANASONIC INDUSTRIAL	ECE-V-1CA-470P
C9	26386/899	CAPACITOR-FIXED CERAMIC 100nF +/-10% 50V X7R/2C1, MULTILAYER, SURFACE-MOUNTED, SIZE 1206, NICKEL	ROHM ELECTRONICS LTD	MCH31-5C-104-KP
IC1	28462/638	IC-DIGITAL FLIP-FLOP/D-TYPE 74HC74... 2 BIT, DUAL, POS EDGE TRIGGER, PLUS SET & CLEAR, CMOS-H/SPEED,	PHILIPS	74HC74D
IC2	28465/055	IC-DIGITAL DECODER/DEMULTIPLEX 74HC138... 3 INPUT, 8 BIT, SINGLE, INVERTING, 3 BIT ADDRESS,	PHILIPS	74HC138D
IC3	28462/157	IC-DIGITAL FLIP-FLOP/D-TYPE 74HC377... OCTAL, POS EDGE TRIGGER WITH DATA ENABLE, CMOS-H/SPEED, 20	PHILIPS	74HC377D
IC4	28462/157	IC-DIGITAL FLIP-FLOP/D-TYPE 74HC377... OCTAL, POS EDGE TRIGGER WITH DATA ENABLE, CMOS-H/SPEED, 20	PHILIPS	74HC377D
IC5	28461/411	IC-ANALOGUE OPERATIONAL AMP TL071... SINGLE, JFET INPUT, LOW NOISE, 8 PIN, SMALL-OUTLINE.	MOTOROLA INC.	TL071CD
IC6	28461/411	IC-ANALOGUE OPERATIONAL AMP TL071... SINGLE, JFET INPUT, LOW NOISE, 8 PIN, SMALL-OUTLINE.	MOTOROLA INC.	TL071CD
L1 to L4	23642/512	INDUCTOR-FIXED 22uH +/- 5% EPOXY-MOULD, 110mA 3R7 MAX, 30 Q @ 2.5 MHz, 25 MHz SRF, SURFACE MOUNTED,	MEGGITT ELECTRONICS	3612-T-220-J
PLA	23437/053	CONNECTOR MULTIWAY, PCB HEADER, 14 WAY, RIGHT ANGLED, 2-ROW, 2.54mm GRID, TO ACCEPT LATCHING	BERG ELECTRONICS	75867-302
R1	24811/177	RESISTOR-FIXED METAL-FILM 1K5 +/- 1% 250mW 200V 50 ppm/DEG.C, SURFACE MOUNTED, SIZE MINI-MELF, (8mm	VISHAY COMPONENTS	SMM0204-1K5-1%50ppm
R2	24811/177	RESISTOR-FIXED METAL-FILM 1K5 +/- 1% 250mW 200V 50 ppm/DEG.C, SURFACE MOUNTED, SIZE MINI-MELF, (8mm	VISHAY COMPONENTS	SMM0204-1K5-1%50ppm
R3	24811/197	RESISTOR-FIXED METAL-FILM 10K +/- 1% 250mW 200V 50 ppm/DEG.C, SURFACE MOUNTED, SIZE MINI-MELF, (8mm	VISHAY COMPONENTS	SMM0204-10K-1%50ppm
R4	24811/201	RESISTOR-FIXED METAL-FILM 15K +/- 1% 250mW 200V 50 ppm/DEG.C, SURFACE MOUNTED, SIZE MINI-MELF, (8mm	VISHAY COMPONENTS	SMM0204-15K-1%50ppm
R5	24811/154	RESISTOR-FIXED METAL-FILM 162R +/- 1% 250mW 200V 50 ppm/DEG.C, SURFACE MOUNTED, SIZE MINI-MELF,	VISHAY COMPONENTS	SMM0204-162R-1%50ppm
R6	24811/154	RESISTOR-FIXED METAL-FILM 162R +/- 1% 250mW 200V 50 ppm/DEG.C, SURFACE MOUNTED, SIZE MINI-MELF,	VISHAY COMPONENTS	SMM0204-162R-1%50ppm
R7	24811/181	RESISTOR-FIXED METAL-FILM 2K21 +/- 1% 250mW 200V 50 ppm/DEG.C, SURFACE MOUNTED, SIZE MINI-MELF,	VISHAY COMPONENTS	SMM0204-2K21-1%50ppm
R8	24811/154	RESISTOR-FIXED METAL-FILM 162R +/- 1% 250mW 200V 50 ppm/DEG.C, SURFACE MOUNTED, SIZE MINI-MELF,	VISHAY COMPONENTS	SMM0204-162R-1%50ppm

Cir. Ref.	MI part number	Description	Manufacturer	Manufacturer's part number
RF tray interconnection PCB (signal generator) C6 (contd.)				
R9	24811/154	RESISTOR-FIXED METAL-FILM 162R +/- 1% 250mW 200V 50 ppm/DEG.C, SURFACE MOUNTED, SIZE MINI-MELF,	VISHAY COMPONENTS	SMM0204-162R-1%50ppm
R10	24811/181	RESISTOR-FIXED METAL-FILM 2K21 +/- 1% 250mW 200V 50 ppm/DEG.C, SURFACE MOUNTED, SIZE MINI-MELF,	VISHAY COMPONENTS	SMM0204-2K21-1%50ppm
R11	24811/190	RESISTOR-FIXED METAL-FILM 5K11 +/- 1% 250mW 200V 50 ppm/DEG.C, SURFACE MOUNTED, SIZE MINI-MELF,	VISHAY COMPONENTS	SMM0204-5K11-1%50ppm
R12	24811/178	RESISTOR-FIXED METAL-FILM 1K62 +/- 1% 250mW 200V 50 ppm/DEG.C, SURFACE MOUNTED, SIZE MINI-MELF,	VISHAY COMPONENTS	SMM0204-1K62-1%50ppm
R13	24811/177	RESISTOR-FIXED METAL-FILM 1K5 +/- 1% 250mW 200V 50 ppm/DEG.C, SURFACE MOUNTED, SIZE MINI-MELF, (8mm	VISHAY COMPONENTS	SMM0204-1K5-1%50ppm
R14	24811/137	RESISTOR-FIXED METAL-FILM 33R2 +/- 1% 250mW 200V 50 ppm/DEG.C, SURFACE MOUNTED, SIZE MINI-MELF,	VISHAY COMPONENTS	SMM0204-33R2-1%50ppm
R15	24811/137	RESISTOR-FIXED METAL-FILM 33R2 +/- 1% 250mW 200V 50 ppm/DEG.C, SURFACE MOUNTED, SIZE MINI-MELF,	VISHAY COMPONENTS	SMM0204-33R2-1%50ppm
R16	24811/173	RESISTOR-FIXED METAL-FILM 1K +/- 1% 250mW 200V 50 ppm/DEG.C, SURFACE MOUNTED, SIZE MINI-MELF, (8mm	VISHAY COMPONENTS	SMM0204-1K0-1%-50ppm
TR1	28435/229	TRANSISTOR PNP BIPOLAR BCX51... 45V 50MHz 1W 1A 40hFE @ 250mA, SURFACE MOUNTED, SOT-89, (12mm TAPE	PHILIPS	BCX51
TR2	28455/302	TRANSISTOR NPN BIPOLAR BCX54... 45V 130MHz 1W 1A 40hFE MIN @ 150mA, MARKING CODE BA, SURFACE	PHILIPS	BCX54
TR3	28435/229	TRANSISTOR PNP BIPOLAR BCX51... 45V 50MHz 1W 1A 40hFE @ 250mA, SURFACE MOUNTED, SOT-89, (12mm TAPE	PHILIPS	BCX51
TR4	28455/302	TRANSISTOR NPN BIPOLAR BCX54... 45V 130MHz 1W 1A 40hFE MIN @ 150mA, MARKING CODE BA, SURFACE	PHILIPS	BCX54
TR5	28435/229	TRANSISTOR PNP BIPOLAR BCX51... 45V 50MHz 1W 1A 40hFE @ 250mA, SURFACE MOUNTED, SOT-89, (12mm TAPE	PHILIPS	BCX51

Interconnections

The following table shows the MI part number of the major interconnection assemblies used in the Service Monitor. The **From** and **To** columns are only to identify each assembly; and have no significance regarding signal direction. They are arranged in alphabetical order, with boards and other modules taking precedece over chassis mounted components. The configuration of each end of the assemblies is shown in the **Termination** columns.

The overall connection diagrams in chapter 7 of this manual provide information which will help to identify interconnections.

Table 6-1 Replaceable interconnecting leads and cables

From	Termination	To	Termination	Part Number
A3 PLA	2 pin in line	A9 PLB	2 pin in line	†43138-751 Cable A
A3 PLB	2 pin in line	A10 PLC	2 pin in line	43138-657
A3 PLC	Single pin	Feed through	Tail	43138-124
A3 PLE	2 pin in line	Feed through	Tails	43138-472
A4 PLB	2 pin in line	B1 PLF	3 pin in line	†43138-751 Cable C
A4 PLC	2 pin in line	B2 PLT	3 pin in line	†43138-751 Cable B
A6 PLB	Tail	Feed through C33		23442-549
Feed through C33	Tail	B1 PLD Pin 7 (and 5 to board ground)		†43138-751 cable H
A7 PLB	2 pin in line	A8 PLC	2 pin in line	43138-416
A8 PLB A9 PLF	2 pin in line 2 pin in line	} B2 PLC	7 pin in line	†43138-751 Cable D
A9 PLC	2 pin in line	B1 PLG	4 pin in line	†43138-751 Cable G
A9 PLD	2 pin in line	A10 PLB	2 pin in line	43138-416
A10 PLE A11 PLC	2 pin in line 3 pin in line	} B1 PLE	5 pin in line	†43138-751 Cable F
A20 A21	Multi-pin Multi-pin	} B2 PLL	Multi-pin	43138-500
A2 PLA	4 pin in line	RF tray	Tails	43138-406
A4 PLC	8 pin in line	RF tray	Tails	43138-407
A4 PLF	4 pin in line	RF tray,	Tails	43138-503
A6 PLA	5 pin in line	RF tray	Tails	43138-130
RF tray (A6)	SMA male	RF tray (C4)	SMA male	43138-456
A7 PLA	Multi-pin	RF tray	Cut ribbon	43137-511
A8 PLA	6 pin in line	RF tray	Tails	43138-404
A9 PLA	7 pin in line	RF tray	Tails	43138-405
A9	SMA male	C5	Trimmed	43138749
A10 PLA	6 pin in line	RF tray A9	Tails 2 pin in line	43138-409
A11	SMA male	Antenna Input	BNC female	43138-437
A11 PLA	Multi-pin	RF tray	Cut ribbon	43130-186

continued.../...

Table 6-1 Replaceable interconnecting leads and cables *(continued)*

From	Termination	To	Termination	Part Number
A11	SMA male	SIG GEN OUT on front panel,	BNC female	43138-437
A11	Tail	A20	SMA male	43138-436
A20	SMA male	RF tray (A2)	SMA male	43138-421
A21	SMA male	RF tray (A6)	SMA male	43138-421
RF tray RF harness				‡43138-751
B1 PLA	Multi-pin	B2PLK	Multi-pin	43129-828
B1 PLB	Multi-pin	B2PLM	Multi-pin	43129-828
B1 PLC	3 pin in line	AF GEN OUT on front panel,	Tails	43138-656
B1 PLD	5 pin in line	C6 PLC C6 PLD	3 pin in line	Part of 43138-750
B1 PLH	6 pin in line	Variable controls on front panel	Tails	43138-429
B1 PLJ	9 pin in line	Accessory socket on front panel	DIN panel socket	43138-389
B1 PLK	7 pin in line	Rear panel SKC Rear panel SKD Loudspeaker	Tails	43138-433
B1 PLN	SMB female	AF IN on front panel	Tails	43138-655
B2 PLA	3 pin in line	External standard input	Tail	43138-474
B2-PLB	7 pin in line	XTAL oscillator	Tails	43138-761
B2 PLF	Multi-pin	Keyboard on front panel.	Multi-pin	43138-423
B2 PLH	6 pin in line	Rotary Control	5 pin in line	43138-425
20 dB In/Out load	SMA male	A11	SMA male	43138-435
B2 PLJ	Multi-pin	RS232 PORT	RS232 panel male	43138-450
B2 PLN		RF tray		See notes below
B2 PLS	7 pin in line	PSU	7 pin in line	43138-430
B2 PLY	3 pin in line	C6	Tails	Part of 43138-750
PSU	3 pin in line	This is a complete assembly *including* the ON/OFF switch		43138-739
PSU	7 pin in line			43133-537
C1 PLB	3 pin in line		Tails	43138-781
C1 PLC	4 pin in line	C2 PLD	3 pin in line	43138-744
		C2 PLE	4 pin in line	

continued.../...

Table 6-1 Replaceable interconnecting leads and cables *(continued)*

From	Termination	To	Termination	Part Number
C2 PLC	6 pin in line		Tails	43138-746
C2 PLF	7 pin in line		Tails	43138-747
C2 PLG	2 pin in line		Tails	43138-782
C2 PLH	3 pin in line		Tails	43138-780
C3 PLA	5 pin in line		Tails	43138-742
C3 PLB	7 pin in line		Tails	43138-747
C4 PLA	4 pin in line		Tails	43138-740
C5 PLA	5 pin in line		Tails	43138-741
PSU positive input PSU negative input PSU chassis	3 push on recepticles	DC Fuse, Chassis, back panel Chassis, back panel,	Tail Tail Tail	43138-473

Note

1. **Items marked † are components of the RF tray RF harness, part number 43138-751, marked ‡. These component cables are available as individual items by quoting the cable reference and the part number.**

   e.g. Cable C of part number 43138-751

2. **The ribbon cable which connects the front of the RF tray to the rear of the RF tray, and also provides the connection to the microprocessor board B2 at PLN, is part of assembly 44991-208. This contains the printed circuit connection boards which interface with the RF tray. The ribbon cable and PCB assembly is available under the above part number but this is not considered to be a user replaceable item.**

Table 6-1 Replaceable interconnecting leads and cables (Options)

From	Termination	To	Termination	Part Number
B4 Conn 1		B1 PLC		43138/600
B4 Conn 3		B1 PLN		43138/599
B4 Conn 5 to 10		B1 PLP		43138/602
B3 PLB	pin in line	B1 PLR	5 pin in line	†43138/778 Cable A
B3 PLC	pin in line	B1 PLS	pin in line	†43138/778 Cable D
B3 PLD	pin in line	B1 PLT	pin in line	†43138/778 Cable C
B3 PLE	pin in line	B2 PLW	pin in line	†43138/778 Cable B
B3 PLA B12 PLA	Multi-pin Multi-pin	B2 PLE	Multi-pin	43138/777
B7 PLA or B10PLA	Multi-pin	B2 PLG	Multi-pin	43137-888
B3/1 PLL	5 pin in line	Lithium battery holder	Tails	43138/802
B2 PLE	Multi-pin			
B4 PLA	3 pin in line	AF GEN OUT on front panel,	Tails	43138-656
B4 SKA	SMB female	AF IN on front panel	Tails	43138-655

Note

1. **†Part number 43138-778 is a complete harness made up of the 4 cables.**

Miscellaneous mechanical parts

The mechanical parts of the Service Monitor which may require replacement are listed below and identified in Fig. 6-2.

Table 6-2 Miscellaneous mechanical parts

Item No (On exploded drawing)	MI part number	Description
1 See note below.	L416	Instrument cover*, complete with:- Side bumpers** (4) Rear feet/bumpers** (4); Screws, M4, 12 mm** (8); RF gasket**; (fitted internally) Warning label** Carrying handle† Handle clamp† (2) Handle trim† (2) Screw, M4, 10 mm† (2). (for item 11)
2	35907/675	Fan cover
3	21837/473	Screw, M4, 35 mm (for item 5)
4	21833/005	Screw, case retaining, M3, 8 mm.
5	41700/756	Carrying handle†
6	37591/668	Handle trim†
7	21857/463	Screw, M4, 10 mm† (for item 11)
8	22315/584	Handle clamp†
9	21857/462	Screw, M4, 20 mm (for item 13)
10	22315/690	Adjustable foot, two position
11	21882/110	Nut, M4 (for item 12)
12	21833/009	Screw, M4, 20 mm (for item 16)
13	37591/649	Front handle
14	35890/266	Front bezel casting
15	21262/702	Screw, (for item 19)
16	37591/452	Collet (for item 20)
17	37591/397	Large knob
18	21815/354	Screw, M3 (for item 22)
19	37591/610	Small knob
20 See note below.	22821/021	Spring ‡
21 See note below.	37591/684	Push rod ‡
22	23184/131	Grommet

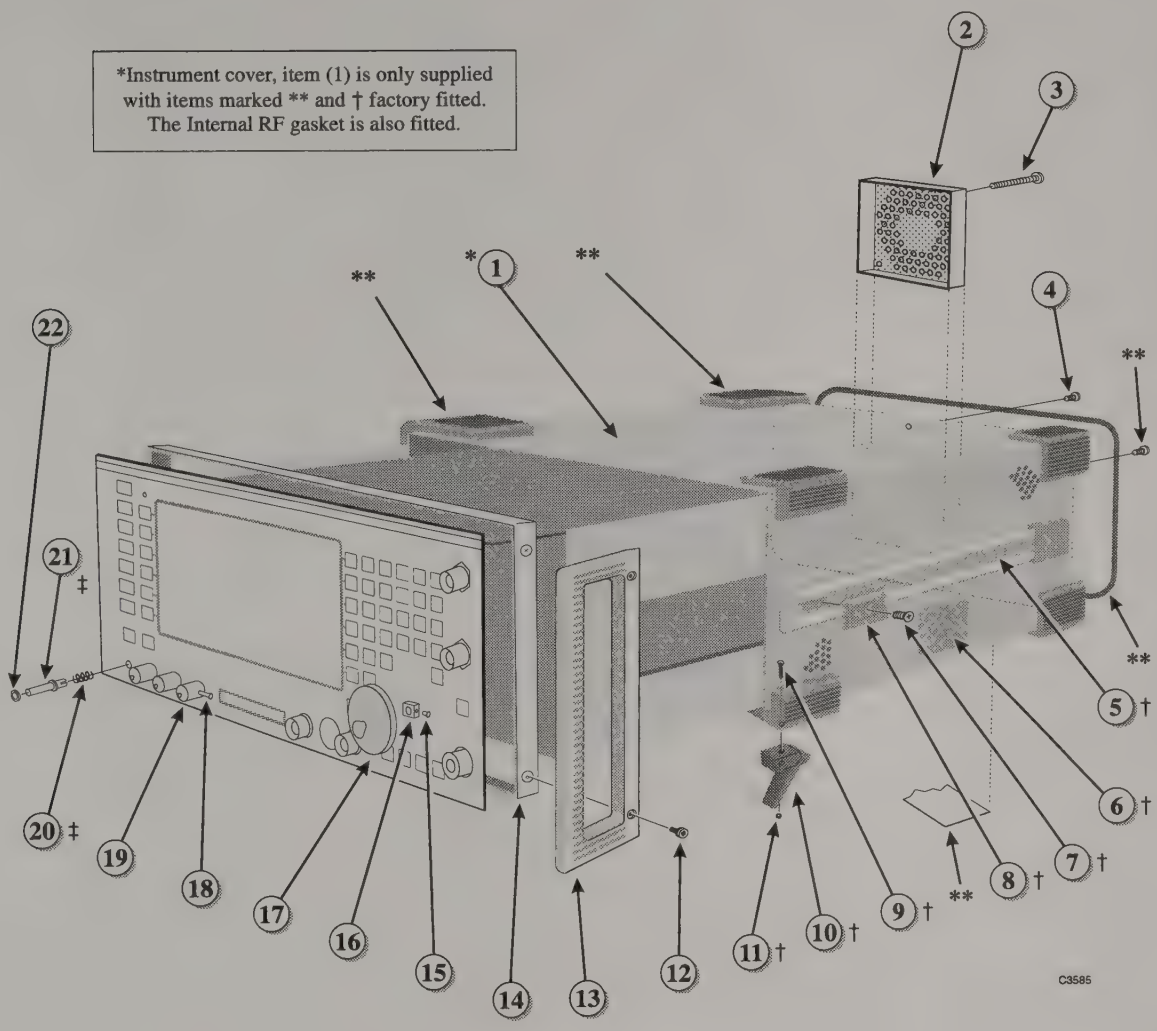

Fig. 6-2 Miscellaneous Mechanical parts

Note

Items 20 (Spring), and 21 (Push rod).
These two items, indicated in the above list and on the exploded drawing Fig. 6-2 by (‡), can only be replaced after removing the instrument cover. The power ON/OFF switch must also be removed from its mounting to facilitate fitting them.

Note

Item 1 (L416).
The instrument cover has attachments which are assembled using factory processes. These attachments, indicated in the above list, and on the exploded drawing Fig. 6-2 by (**), are not supplied as individual items.
When a replacement instrument case is ordered, this will be supplied as a composite item, with items mentioned above (indicated by **) already fitted.
The replacement instrument cover will also have the items marked † already fitted, but these are also available as individual items.

Chapter 7
SERVICING DIAGRAMS

Contents

Circuit Notes **7-2**

Symbols 7-3

PCB layouts 7-3

List of figures

Fig. 7-1 Overall connection diagram 7-5

Fig. 7-2 RF tray Interconnections 7-6

Fig. 7-3 RF tray interconnection (Receiver) 7-7

Fig. 7-4 B3/1 connections RF in/out tray Interconnections 7-8

Fig. 7-5 RF tray interconnection (RF generator) 7-9

Fig. 7-6 Options interconnections 7-10

Fig. 7-7 RF tray Interconnections board 7-11

Fig. 7-8 AA1 Component layout of RF oscillator 7-12

Fig. 7-9 AA1 RF oscillator 7-13

Fig. 7-10 A2 Component layout of input mixer 7-14

Fig. 7-11 A2 Input mixer 7-15

Fig. 7-12 A3 Component layout of 2nd and 3rd mixer 7-16

Fig. 7-13 A3 2nd and 3rd mixer 7-17

Fig. 7-14 A4/1 Component layout of 10.7 MHz IF amplifier and Log. amplifier 7-18

Fig. 7-15 A4/1 10.7 MHz IF amplifier and Log. amplifier 7-19

Fig. 7-16 A4/1 10.7 MHz IF amplifier and Log. amplifier 7-21

Fig. 7-17 A4/1 10.7 MHz IF amplifier and Log. amplifier 7-23

Fig. 7-18 A6/1 Component layout of RF output amplifier and AM modulator 7-24

Fig. 7-19 A6/1 RF output amplifier and AM modulator 7-25

Fig. 7-20 A7/1 Component layout of 1st local oscillator control 7-26

Fig. 7-21 A7/1 1st local oscillator control 7-27

Fig. 7-22 A8/1 Component layout of 1st local oscillator 7-28

Fig. 7-23 A8/1 1st local oscillator 7-29

Fig. 7-24 A8/1 1st local oscillator 7-31

Fig. 7-25 A9/1 Component layout of 2nd and 3rd local oscillators 7-32

Fig. 7-26 A9/1 2nd and 3rd local oscillators 7-33

Fig. 7-27 A9/1 2nd and 3rd local oscillators 7-35

Fig. 7-28 A10 Component layout of 2nd and 3rd local oscillator control 7-36

Fig. 7-29 A10 2nd and 3rd local oscillator control 7-37

Fig. 7-30 A11/1 Component layout of input /output switching 7-38

Fig. 7-31 A11/1 Input/output switching 7-39

Fig. 7-32 A11/1 Input/output switching 7-41

Fig. 7-33 A15 Component layout of single sideband demodulator 7-42

Fig. 7-34 A15 Single sideband demodulator 7-43

Fig. 7-35 A20 Component layout of RF generator output attenuator 7-44

Fig. 7-36 A20 RF generator output attenuator 7-45

Fig. 7-37 A21 Component layout of Input attenuator 7-46

Fig. 7-38 A21 Input attenuator 7-47

Fig. 7-39 AF3 Component layout of VCO Sub-board 7-48

Fig. 7-40 AF3 VCO Sub-board 7-49

Fig. 7-41 B1/2 Component layout of Audio processor - top side 7-50

Fig. 7-42 B1/2 Audio processor 7-51

Fig. 7-43 B1/2 Component layout of audio processor board - under side 7-52

contd./...

List of figures *(continued)*

Fig. 7-44	B1/2	Audio processor	7-53
Fig. 7-45	B1/2	Audio processor	7-55
Fig. 7-46	B1/2	Audio processor	7-57
Fig. 7-47	B1/2	Audio processor	7-59
Fig. 7-48	B1/2	Audio processor	7-61
Fig. 7-49	B1/2	Audio processor	7-63
Fig. 7-50	B1/2	Audio processor	7-65
Fig. 7-51	B1/2	Audio processor	7-67
Fig. 7-52	B2/1	Component layout of microprocessor board	7-68
Fig. 7-53	B2/1	Microprocessor	7-69
Fig. 7-54	B2/1	Microprocessor	7-71
Fig. 7-55	B2/1	Microprocessor	7-73
Fig. 7-56	B2/1	Microprocessor	7-75
Fig. 7-57	B2/1	Microprocessor	7-77
Fig. 7-58	B3/1	Component layout of cellular radio systems board	7-78
Fig. 7-59	B3/1	Cellular radio systems board	7-79
Fig. 7-60	B3/1	Cellular radio systems board	7-81
Fig. 7-61	B3/1	Cellular radio systems board	7-83
Fig. 7-62	B4	Component layout of 600 Ω audio input/output interface	7-84
Fig. 7-63	B4	600 Ω audio input/output interface	7-85
Fig. 7-64	B7	Component layout of GPIB interface	7-86
Fig. 7-65	B7	GPIB interface	7-87
Fig. 7-66	B10	Component layout of parallel interface	7-88
Fig. 7-67	B10	Parallel interface	7-89
Fig. 7-68	B11	Component layout of light-weight power head interface	7-90
Fig. 7-69	B11	Light-weight power head interface	7-91
Fig. 7-70	B12	Component layout of memory card and date/time stamp	7-92
Fig. 7-71	B12	Memory card and date/time stamp	7-93
Fig. 7-72	B13	Component layout of CCITT filter	7-94
Fig. 7-73	B13	CCITT filter	7-95
Fig. 7-74	B13/1	Component layout of CMESS filter	7-96
Fig. 7-75	B13/1	CMESS filter	7-97
Fig. 7-76	C1	Component layout of RF generator control	7-98
Fig. 7-77	C1	RF generator control	7-99
Fig. 7-78	C2	Component layout of RF oscillator	7-100
Fig. 7-79	C2	RF oscillator	7-101
Fig. 7-80	C3	Component layout of RF divider inc AF3 VCO	7-102
Fig. 7-81	C3	RF divider inc AF3 VCO	7-103
Fig. 7-82	C4	Component layout of Bypass board	7-104
Fig. 7-83	C4	Bypass board	7-105
Fig. 7-84	C5	Component layout of BFO board	7-106
Fig. 7-85	C5	BFO board	7-107
Fig. 7-86	C6	Component layout of RF tray interconnection PCB	7-108
Fig. 7-87	C6	RF tray interconnection PCB	7-109
Fig. 7-88		Keyboard	7-111

Circuit Notes

Symbols

Symbols are to BS 3939 with the following additions :

Static sensitive component - see Precautions, Page iv.

Test point

Edge connector

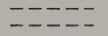

Ferrite bead

PCB layouts

PCB layouts are shown as viewed from the component side. Where components are fitted to both sides of a board, both sides are shown. Top side means the side overprinted with type designation and number, issue numbers etc; in most cases this will carry the most components and all large componts. The under side will usually have the least components and a low profile.

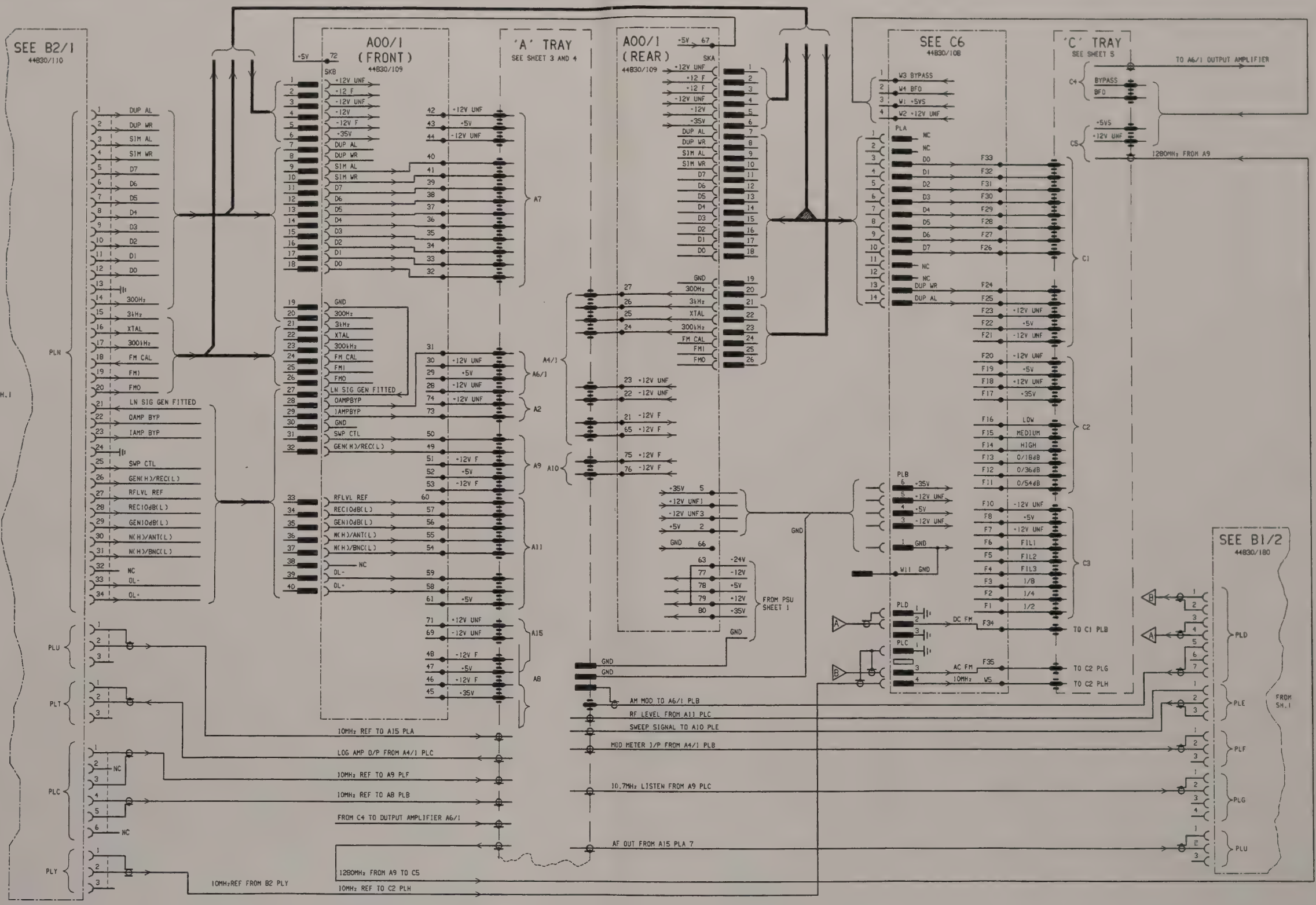

Overall connection

Drg. No. Z44991/229 Sheet 2 of 6 Issue 1

Fig. 7-2 RF tray Interconnections

Circuit diagram

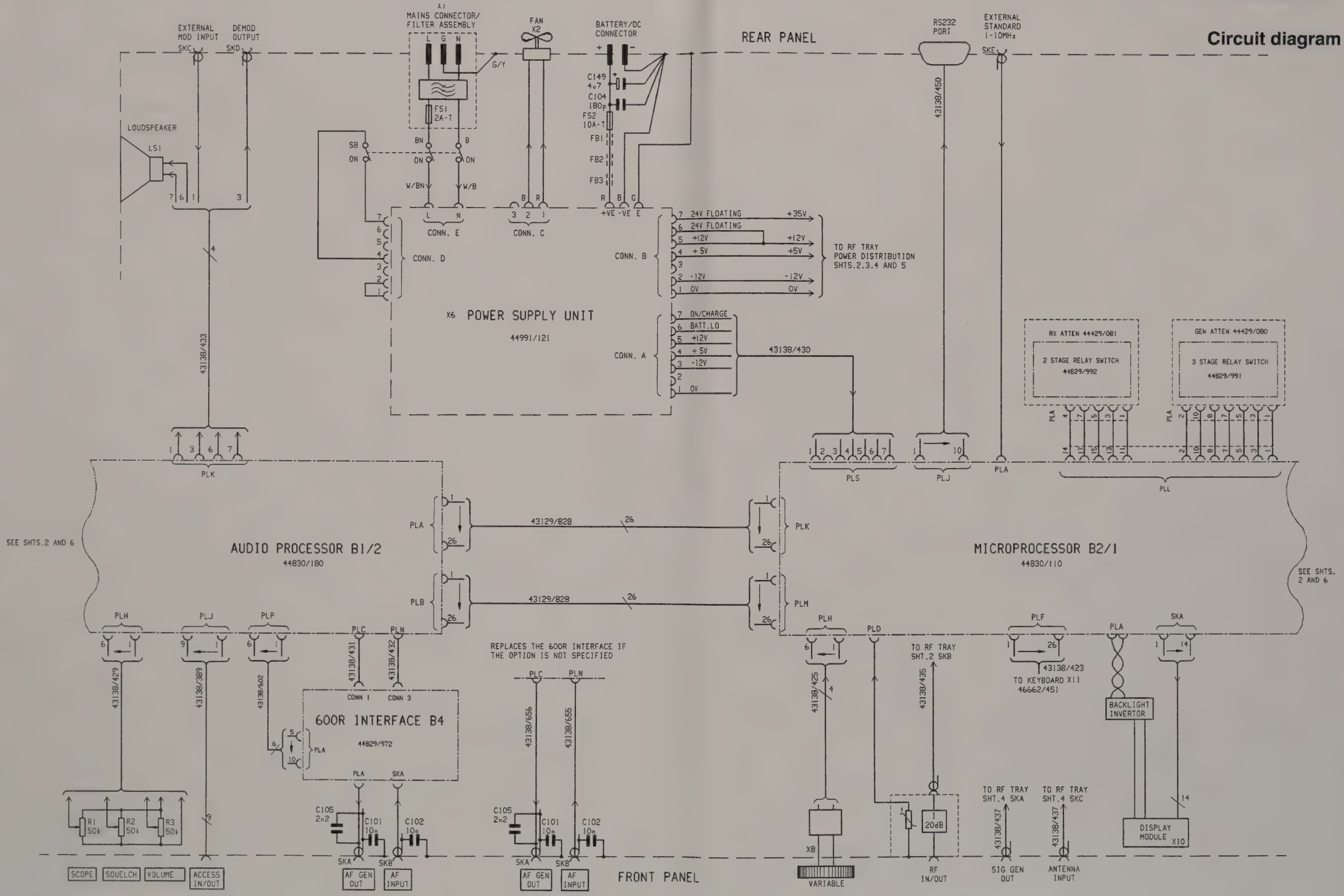

Drg. No. Z44991/229 Sheet 1 of 6 Issue 1

Fig. 7-1 Overall connection diagram

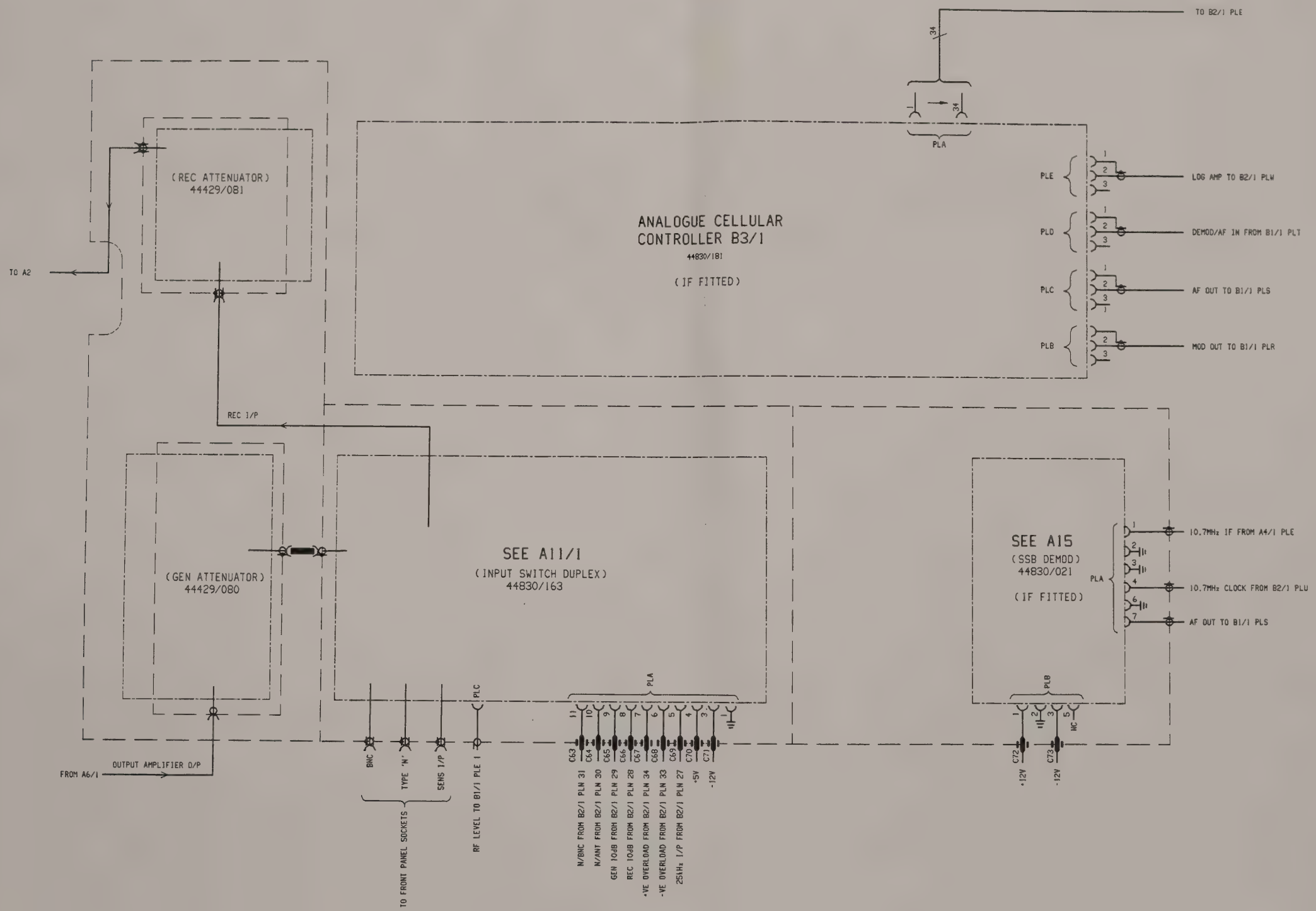

RF tray interconnections (Receiver)

Drg. No. Z44991/229 Sheet 4 of 6 Issue 1

Fig. 7-4 B3/1 connections RF in/out tray Interconnections

Circuit diagram

NOTE.

1. ALL FEED THROUGH CAPACITORS 1n5 UNLESS OTHERWISE STATED.

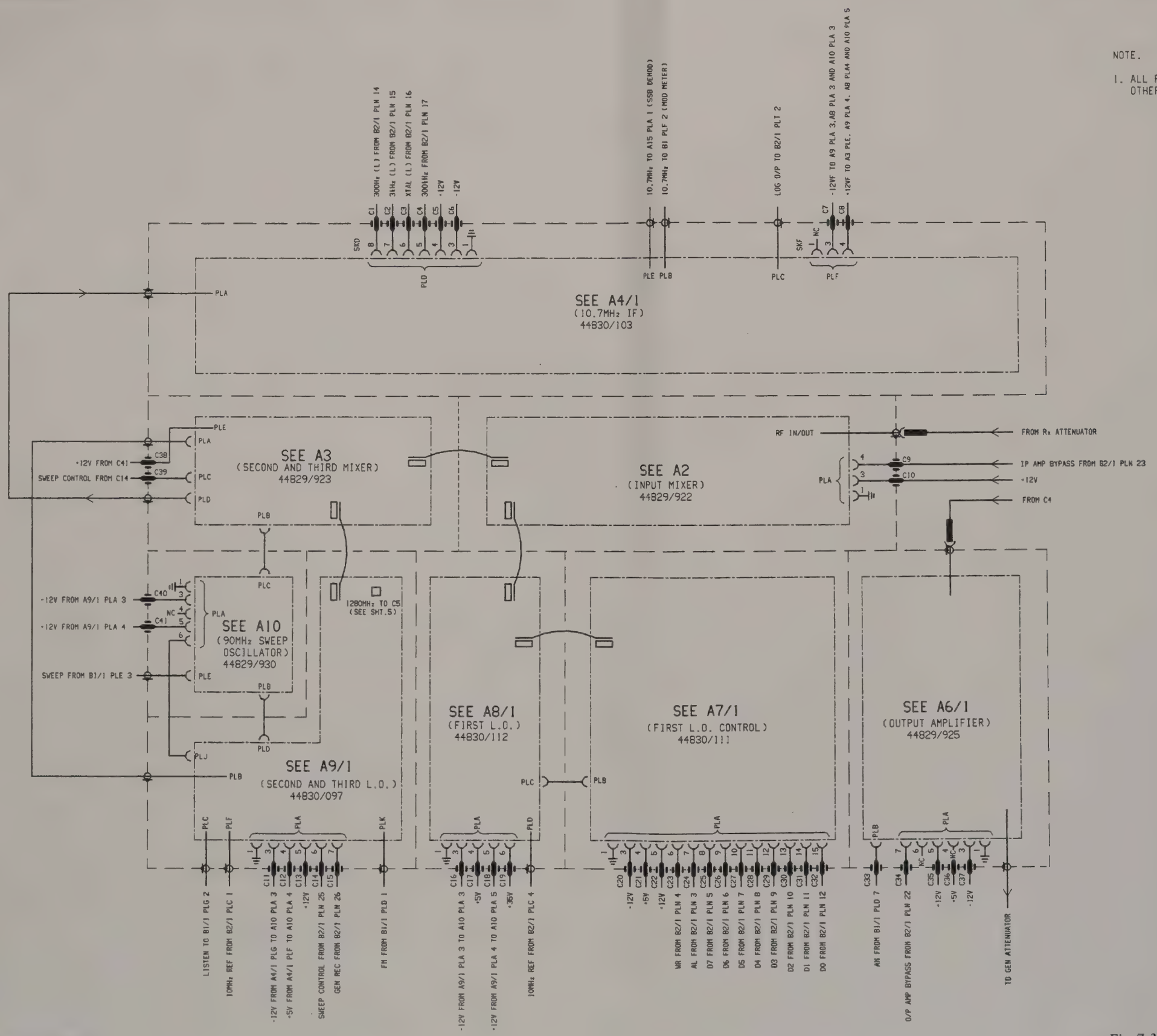

Drg. No. Z44991/229 Sheet 3 of 6 Issue 1

Fig. 7-3 RF tray interconnection (Receiver)

Circuit diagram

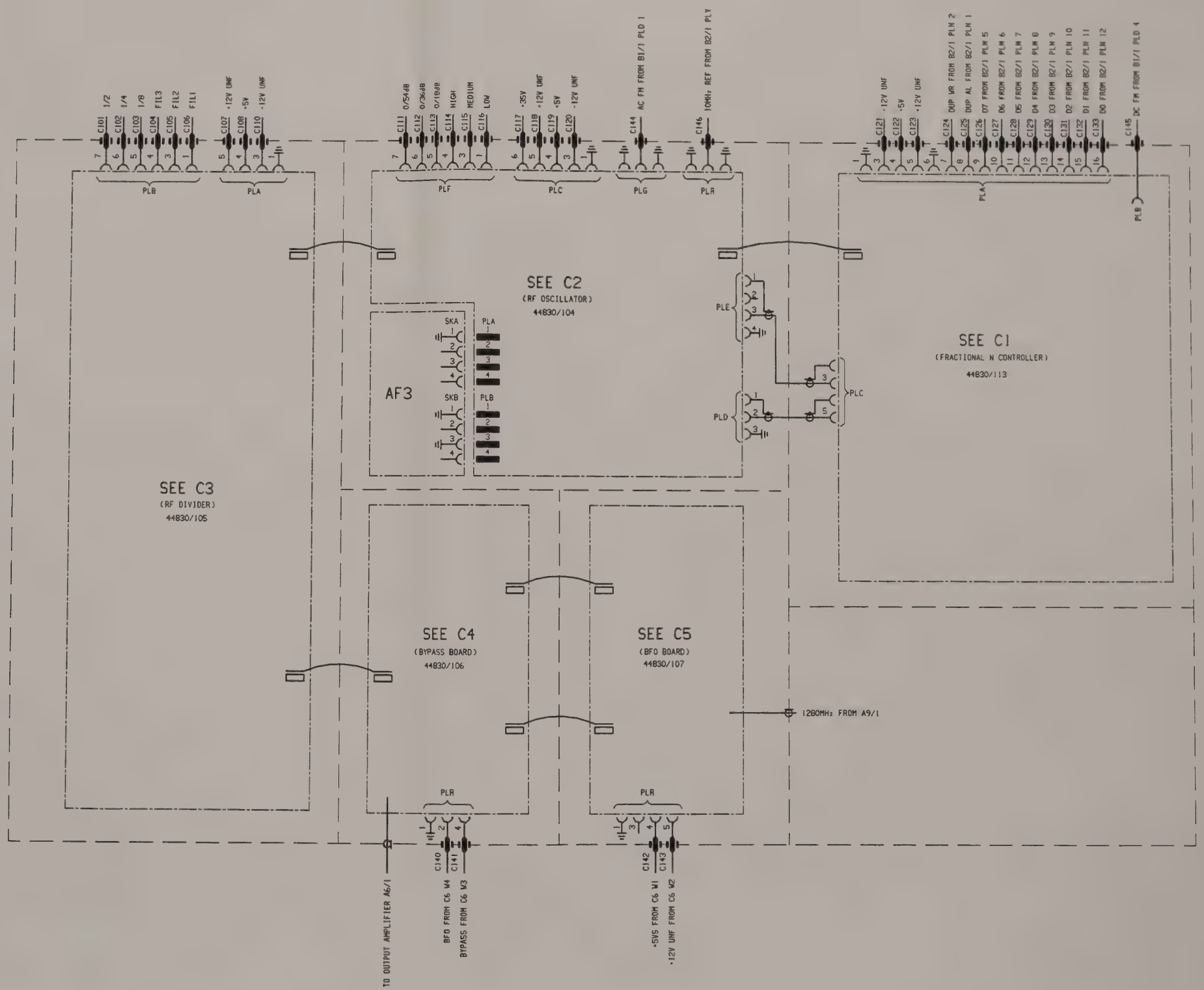

Drg. No. Z44991/229 Sheet 5 of 6 Issue 1

Fig. 7-5 RF tray interconnection (RF generator)

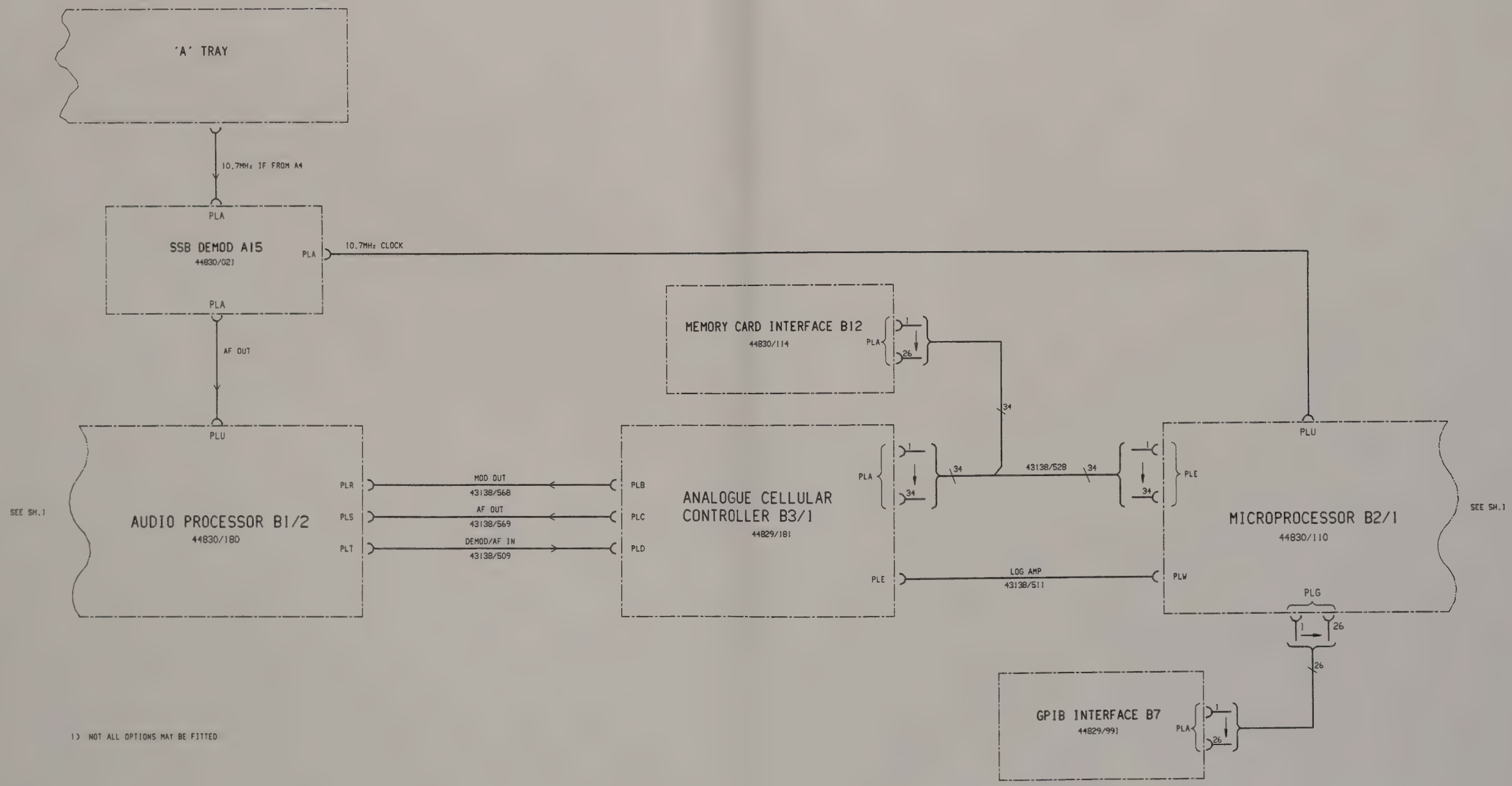

1) NOT ALL OPTIONS MAY BE FITTED

RF tray interconnections (RF generator)

Drg. No. E44991/229, Sheet 6 of 6 Issue 1

Fig. 7-6 Options interconnections

Circuit diagram

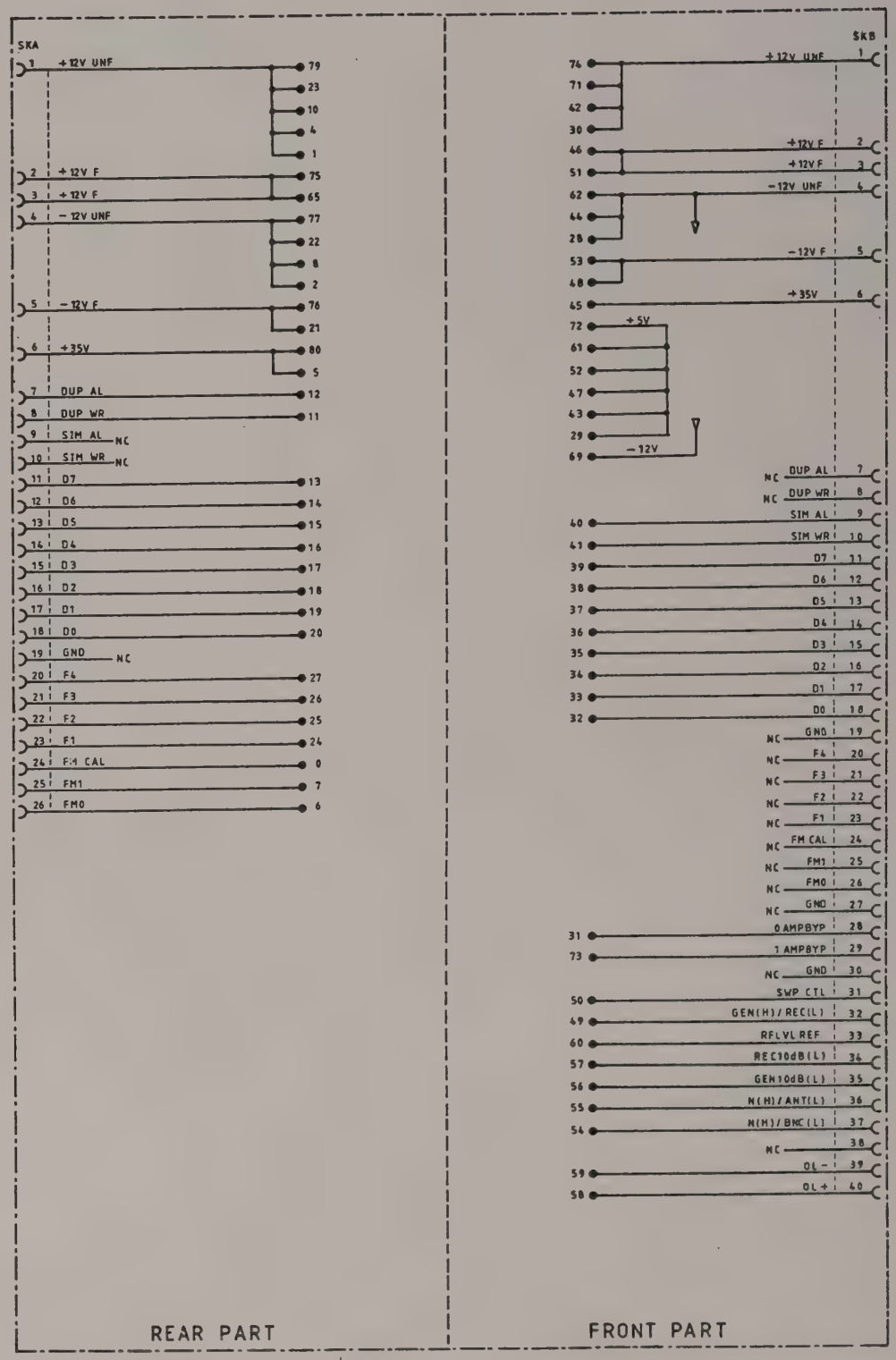

Drg. No. Z44830/109 Sheet 1 of 1 Issue 1

Fig. 7-7 RF tray Interconnections board

AA1

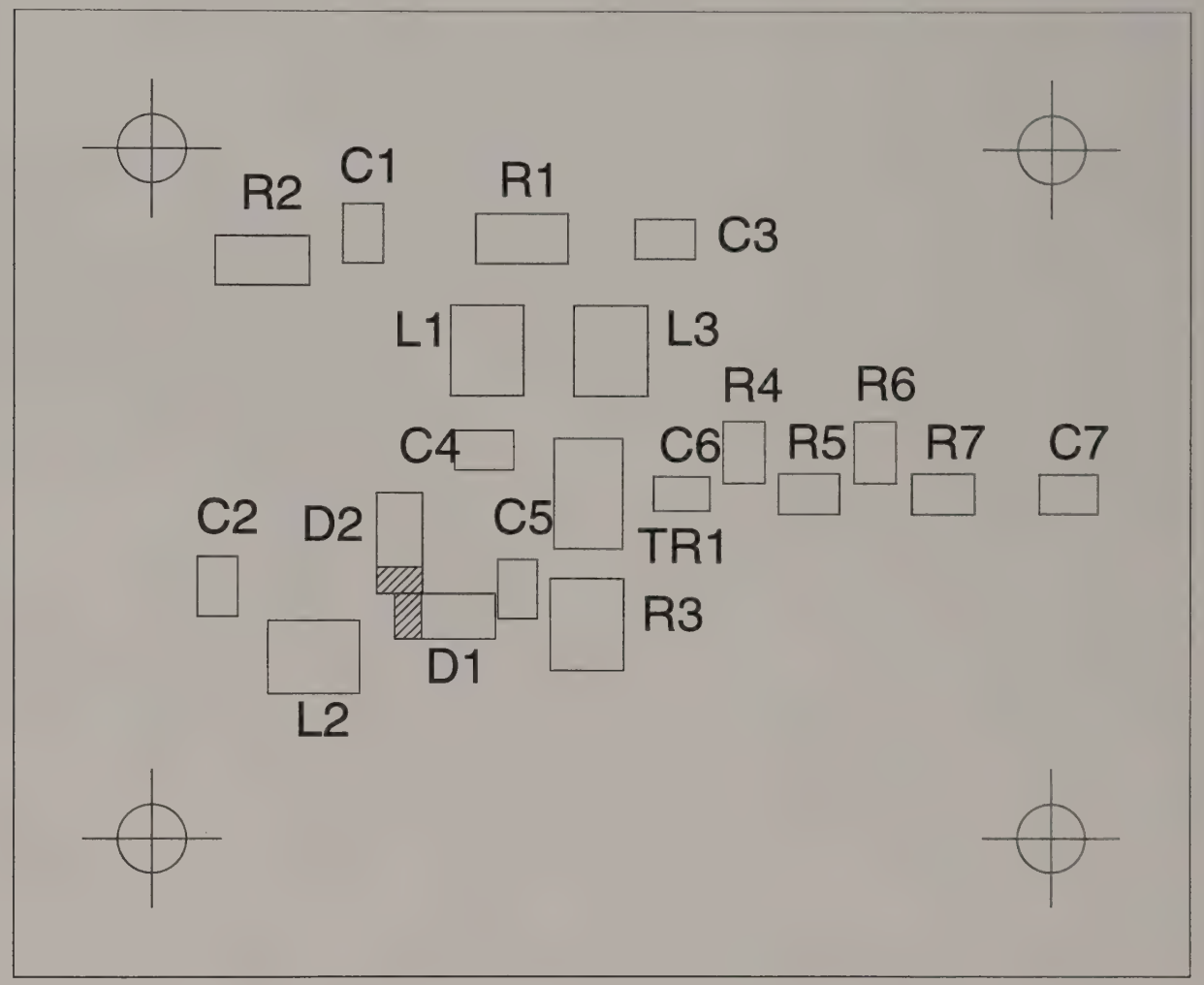

RF tray interconnection board

Drg. No. E44830/160 Sheet 1 of 1 Issue 1

Fig. 7-8 AA1 Component layout of RF oscillator

Circuit diagram AA1

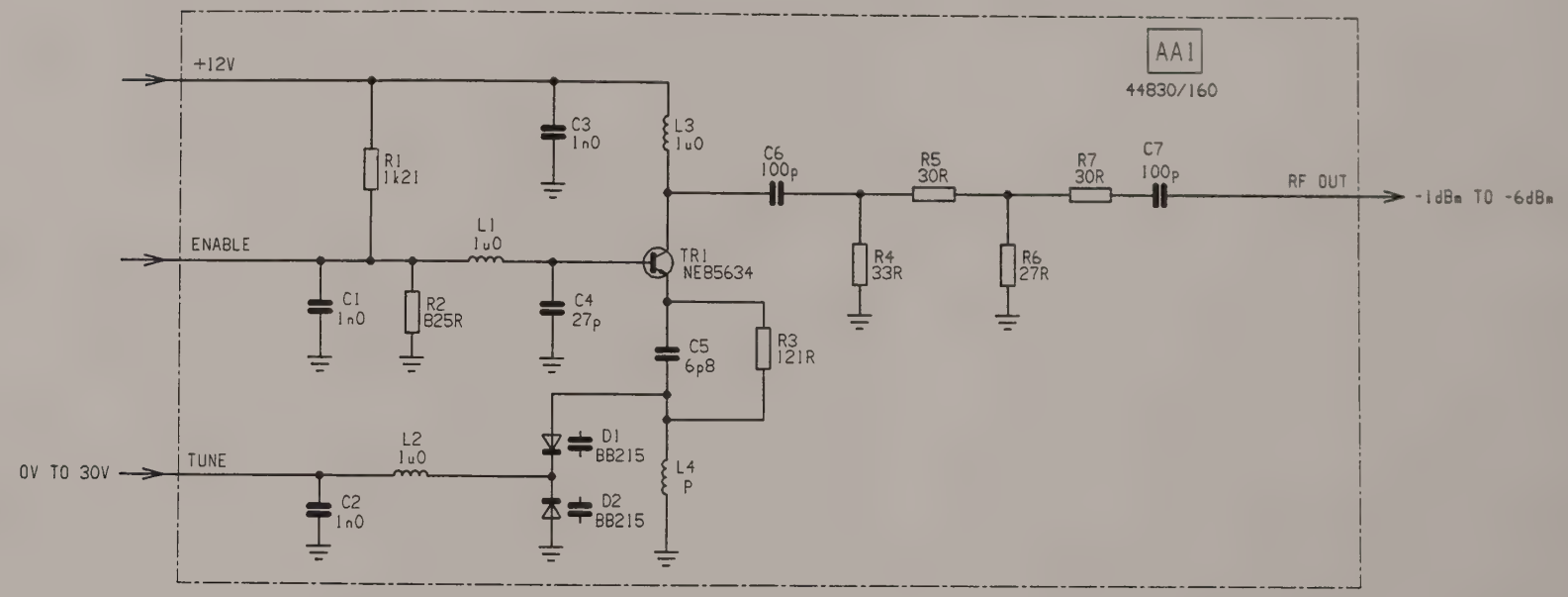

Drg. No. Z44830/160 Sheet 1 of 1 Issue 1

Fig. 7-9 AA1 RF oscillator

A2

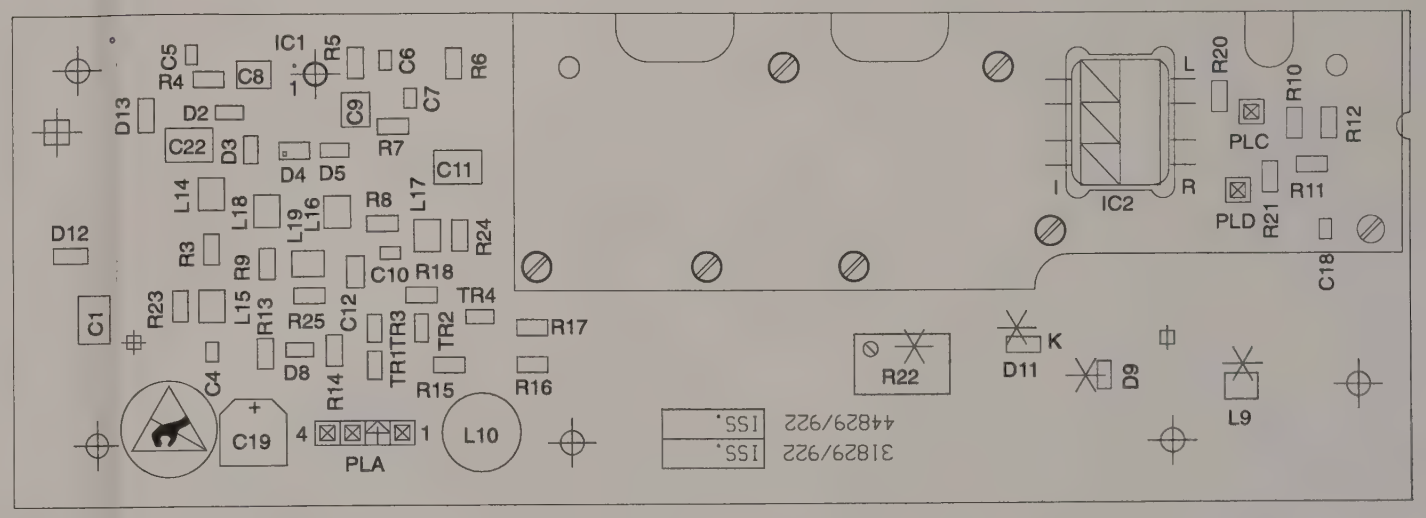

TOP SIDE

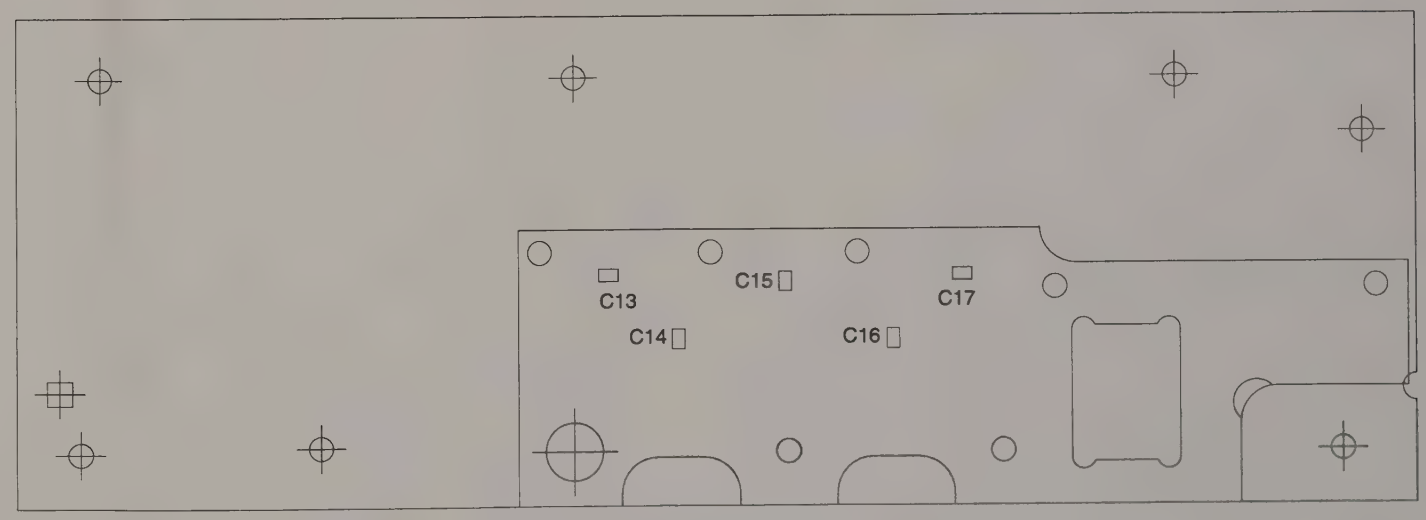

UNDER SIDE

RF oscillator AA1

Drg. No. E44829/922

Fig. 7-10 A2 Component layout of input mixer

Circuit diagram A2

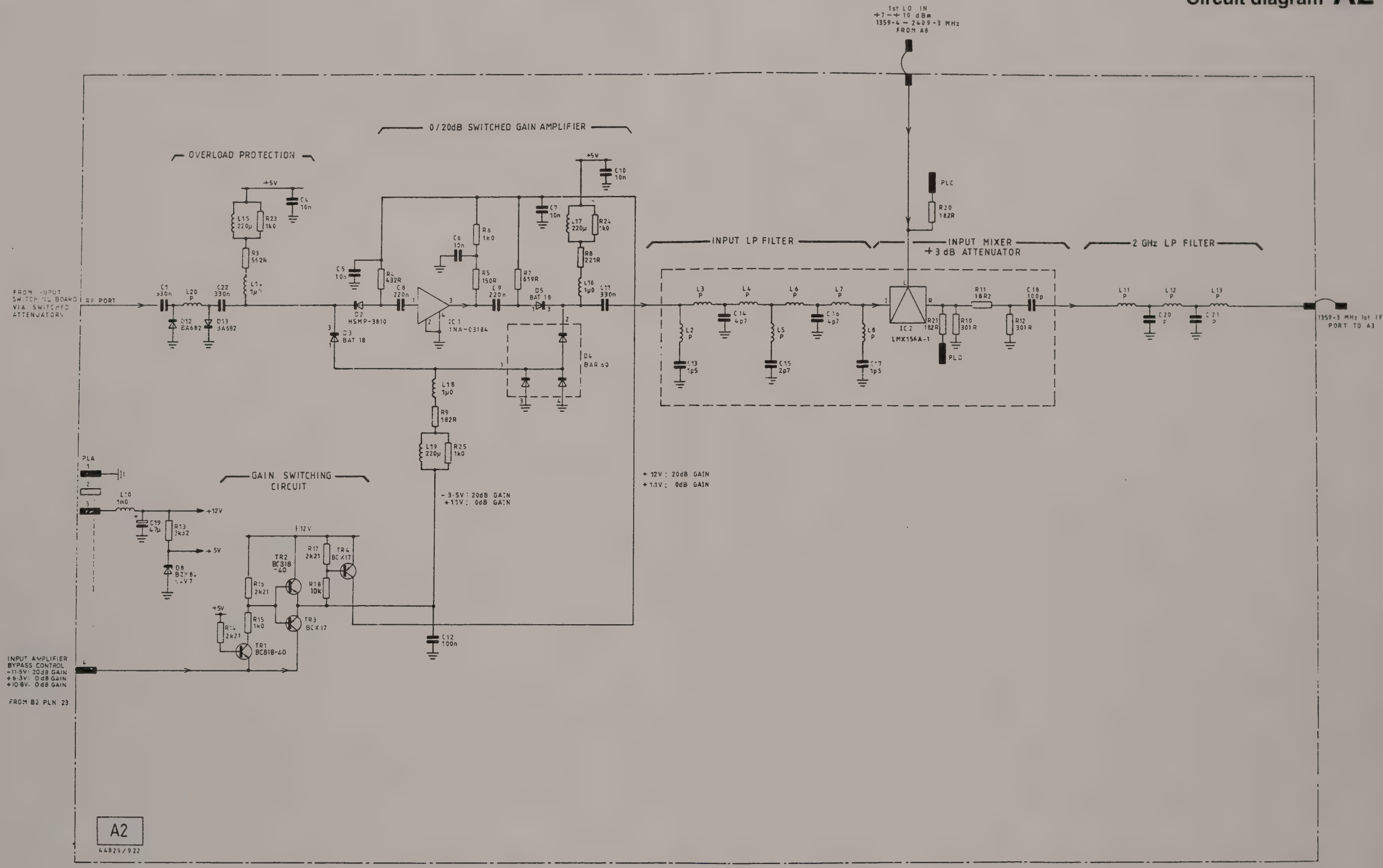

Drg. No. Z44829/922 Sheet 1 of 1 Issue 6

Fig. 7-11 A2 Input mixer

A3

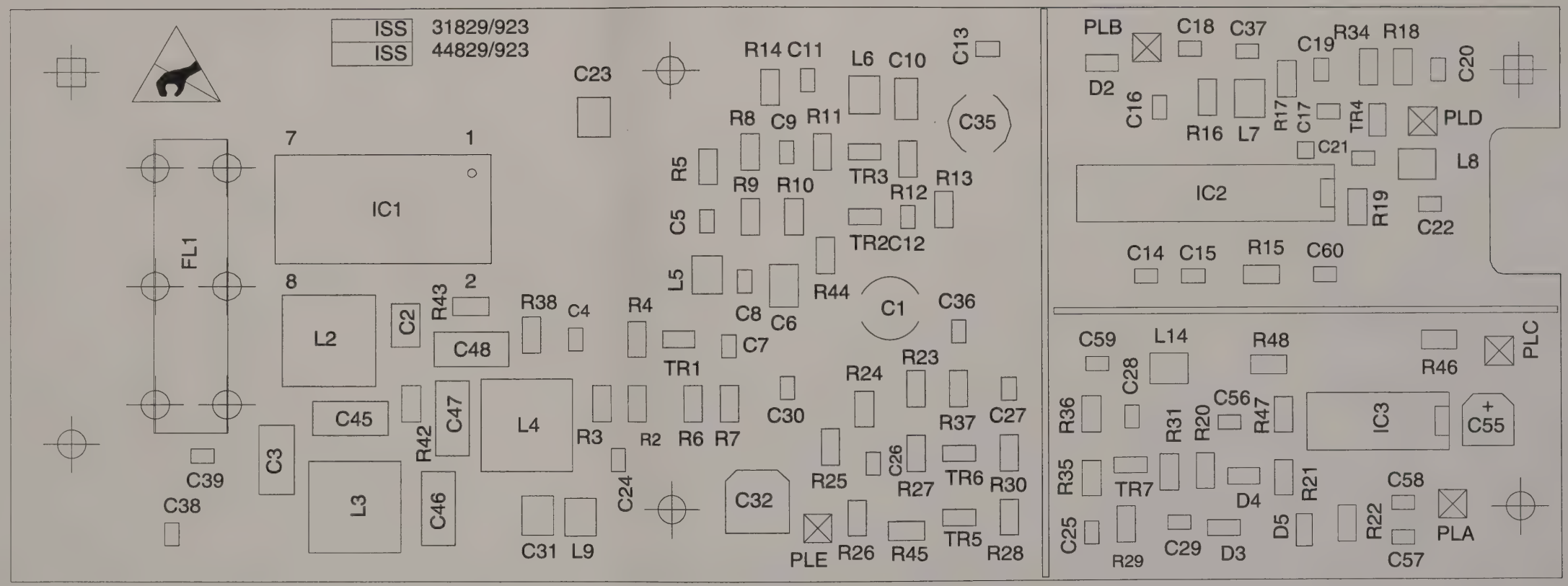

Input mixer A2

Drg. No. E44829/923

Fig. 7-12 A3 Component layout of 2nd and 3rd mixer

Circuit diagram A3

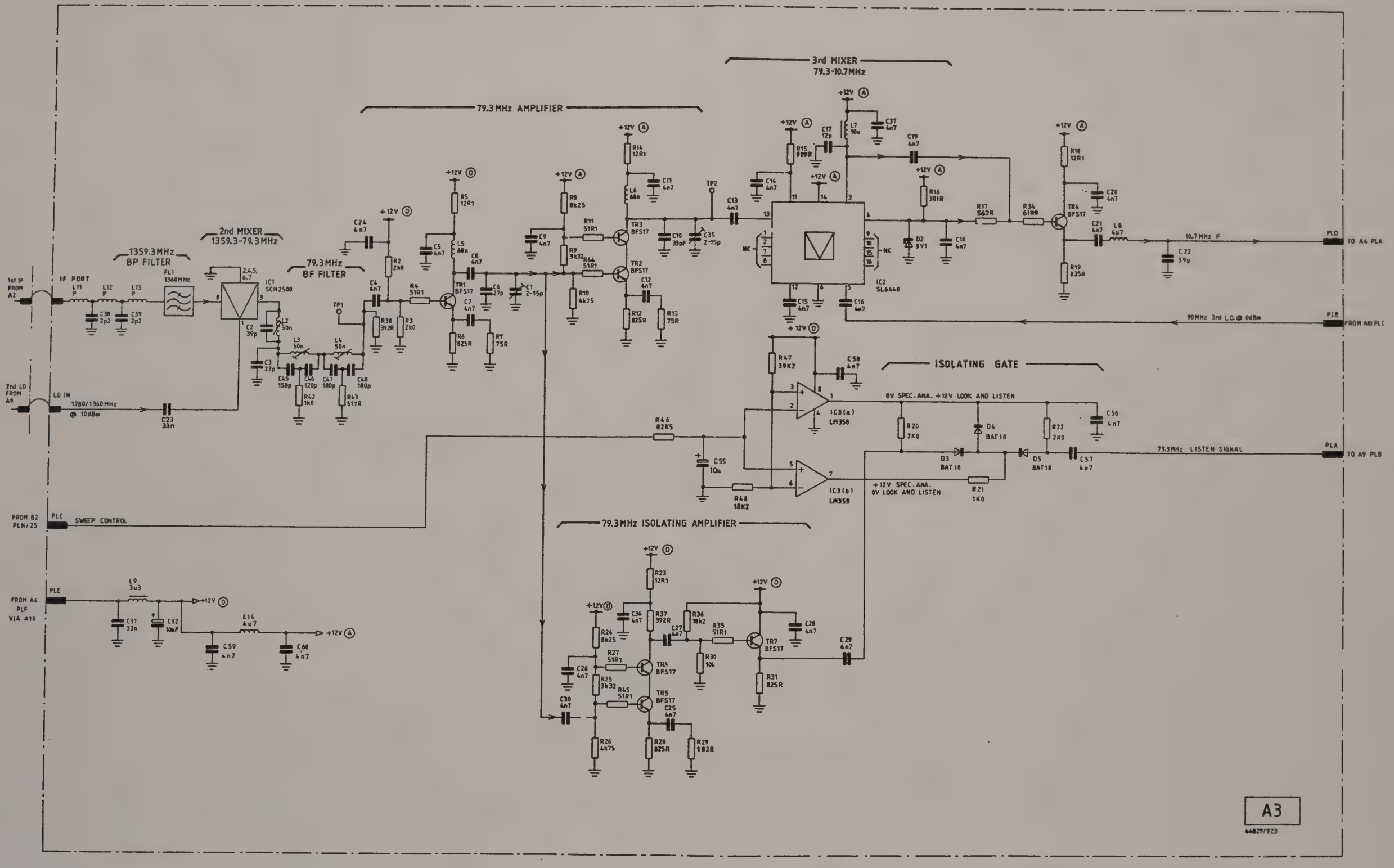

Drg. No. Z44829/923 Sheet 1 of 1 Issue 12

Fig. 7-13 A3 2nd and 3rd mixer

A4/1

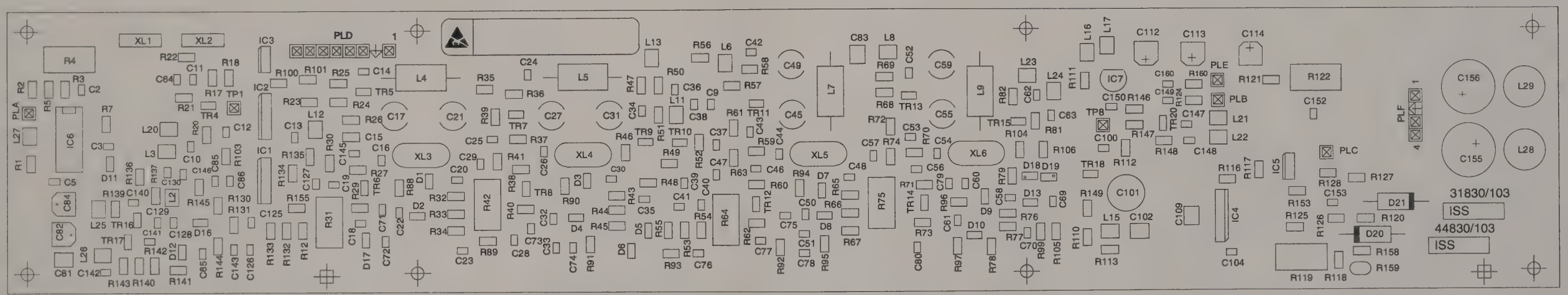

2nd and 3rd mixer A3

Drg. No. E44830/103 Issue 1

Fig. 7-14 A4/1 Component layout of 10.7 MHz IF amplifier and Log. amplifier

Circuit diagram A4/1

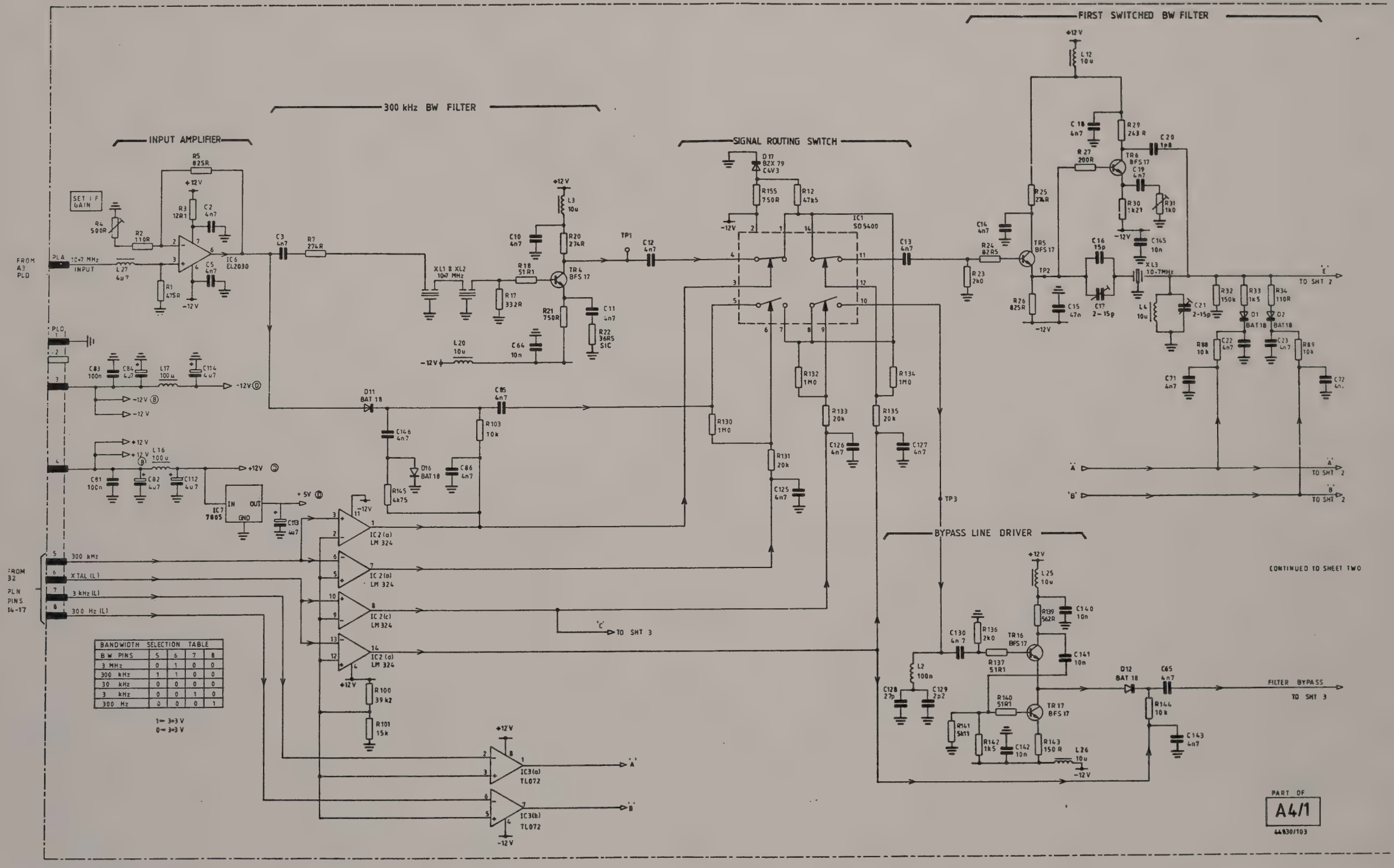

Drg. No. Z44830/103 Sheet 1 of 3 Issue 2

Fig. 7-15 A4/1 10.7 MHz IF amplifier and Log. amplifier

10.7 MHz IF amplifier and Log. amplifier **A4/1**

Circuit diagram A4/1

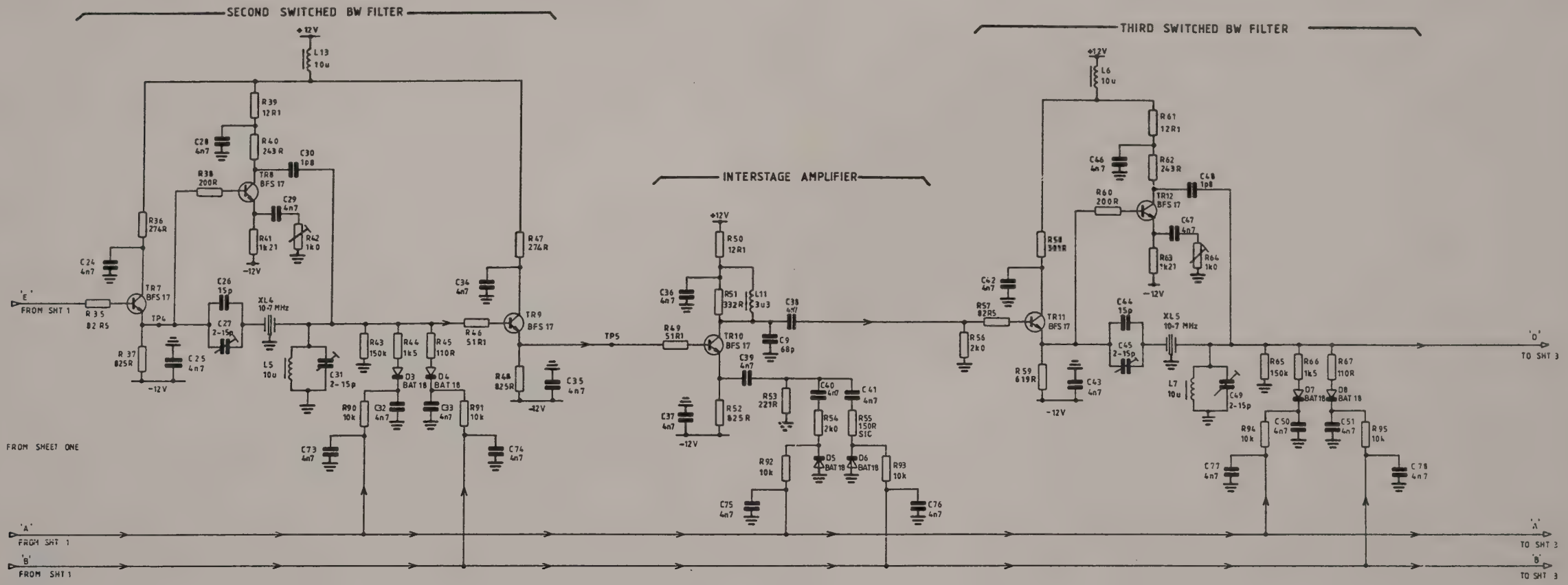

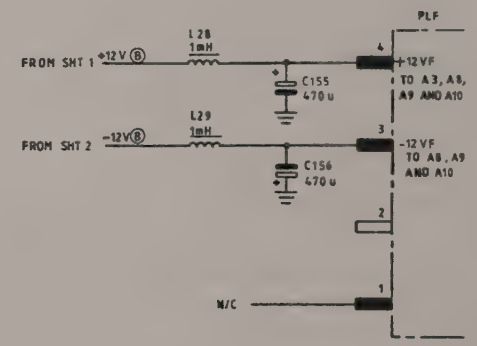

Drg. No. Z448830/103 Sheet 2 of 3 Issue 1

Fig. 7-16 A4/1 10.7 MHz IF amplifier and Log. amplifier

10.7 MHz IF amplifier and Log. amplifier **A4/1**

Circuit diagram A4/1

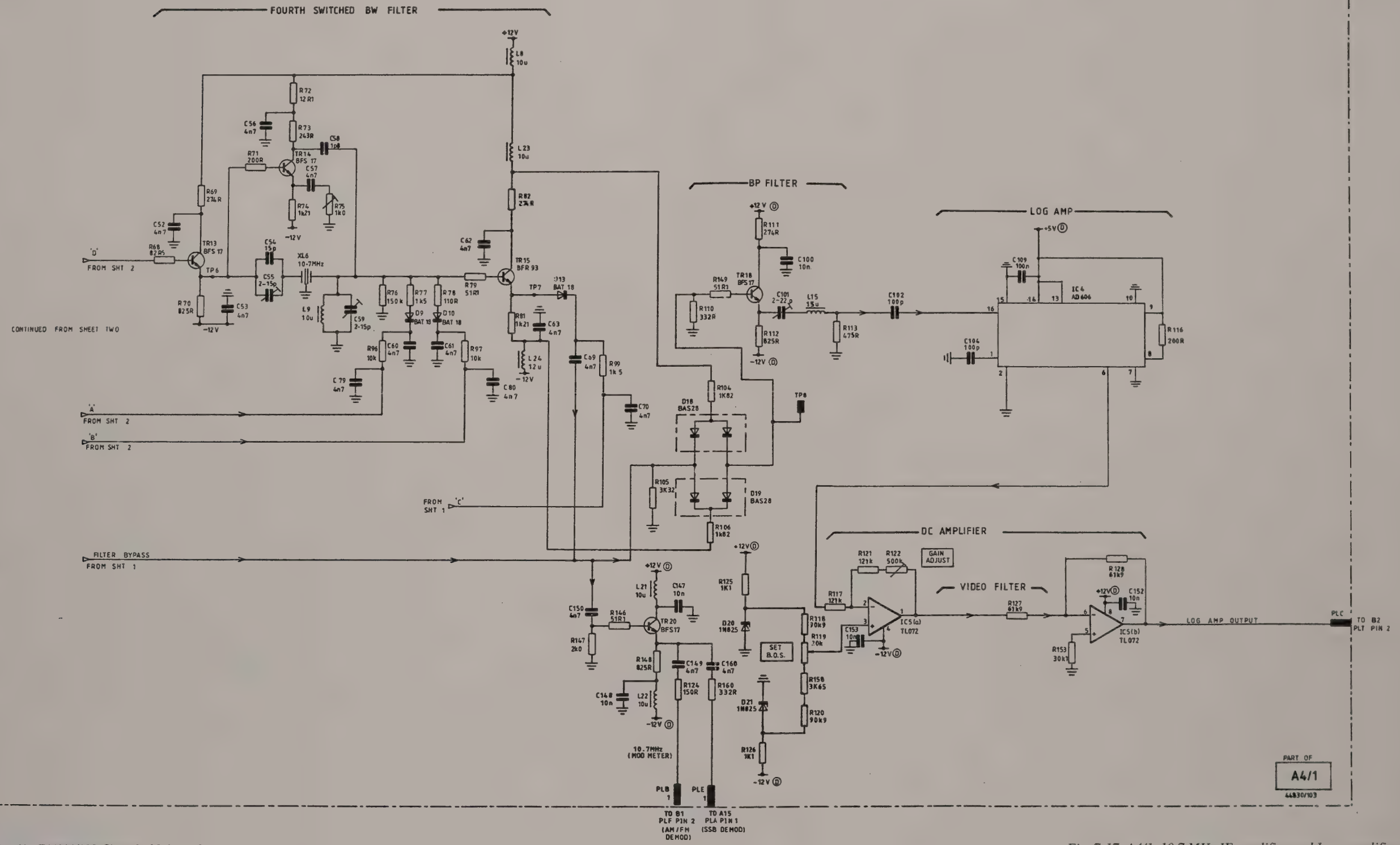

Drg. No. Z44830/103 Sheet 3 of 3 Issue 2

Fig. 7-17 A4/1 10.7 MHz IF amplifier and Log. amplifier

A6/1

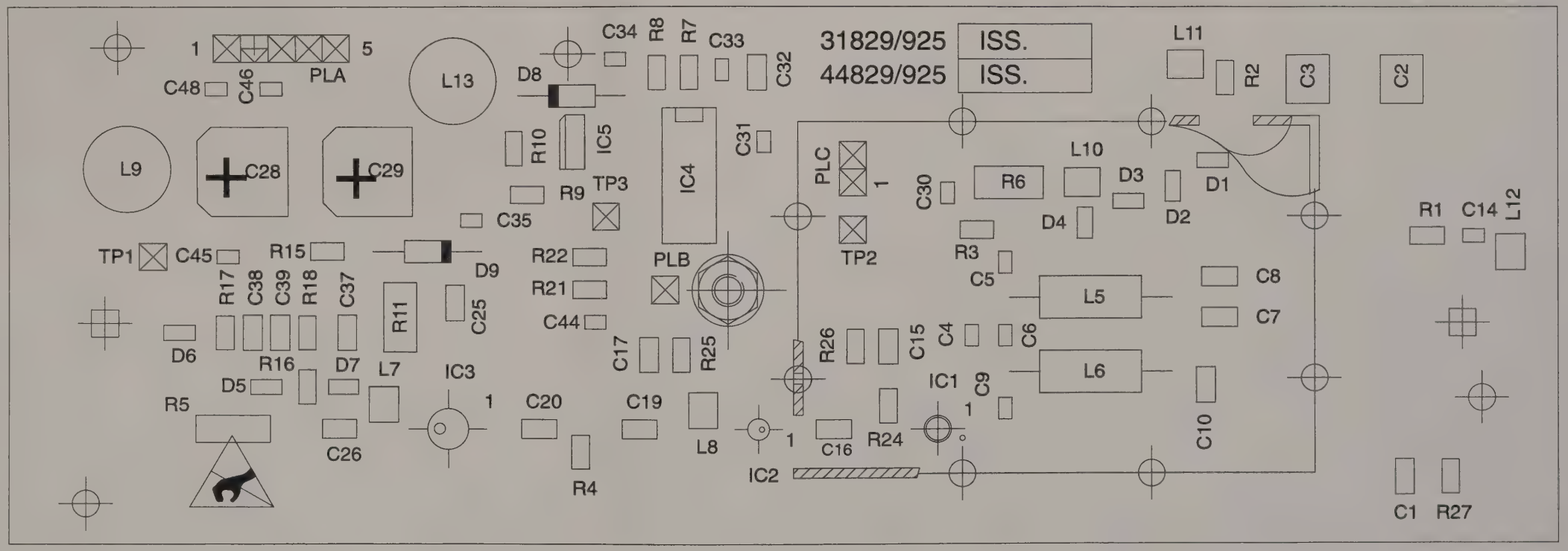

10.7 MHz IF amplifier and Log. amplifier A4/1

Drg. No. E44829/925

Fig. 7-18 A6/1 Component layout of RF output amplifier and AM modulator

Circuit diagram A6/1

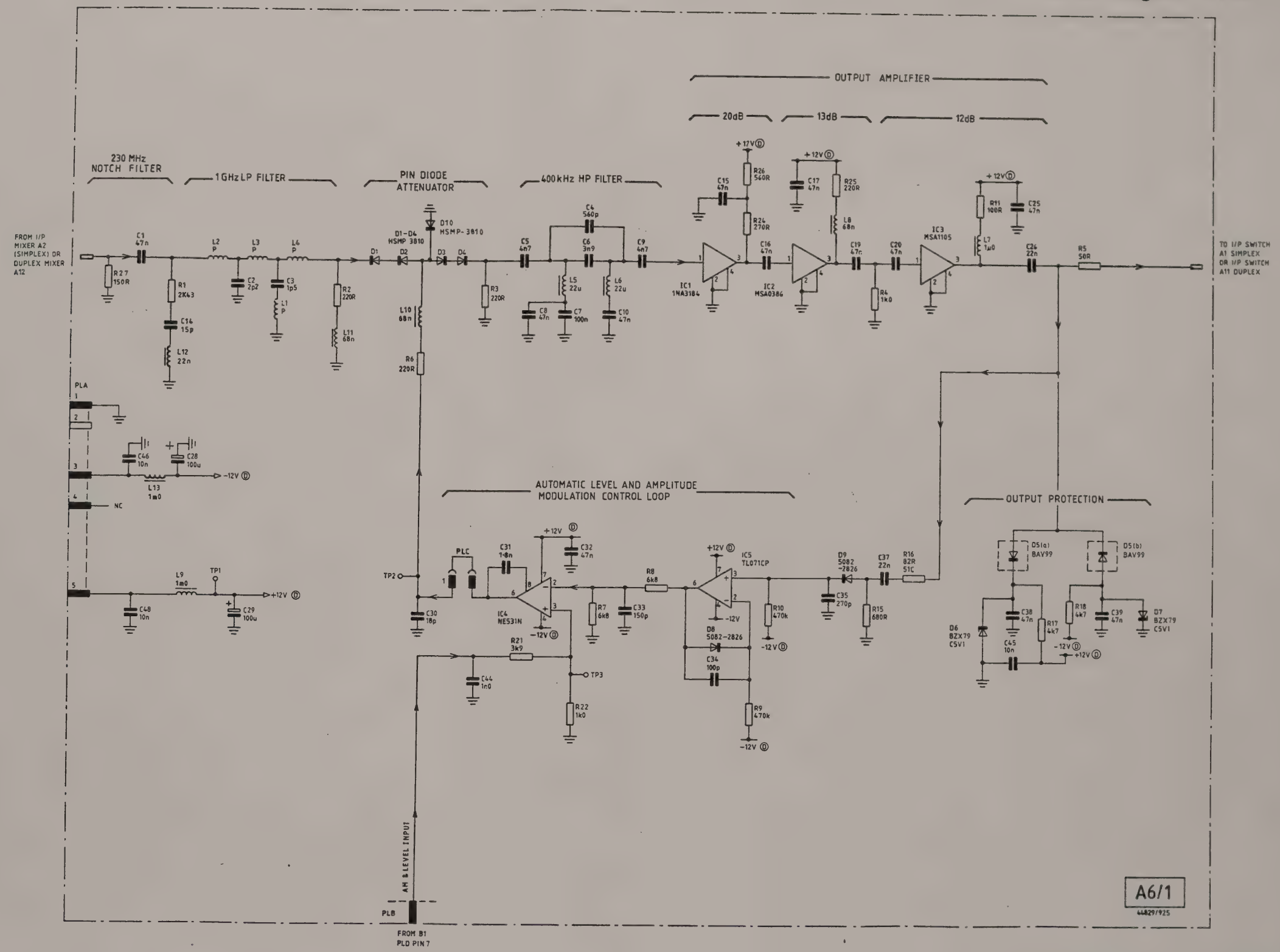

Drg. No. Z44829/925 Sheet 1 of 1 Issue 4

Fig. 7-19 A6/1 RF output amplifier and AM modulator

A7/1

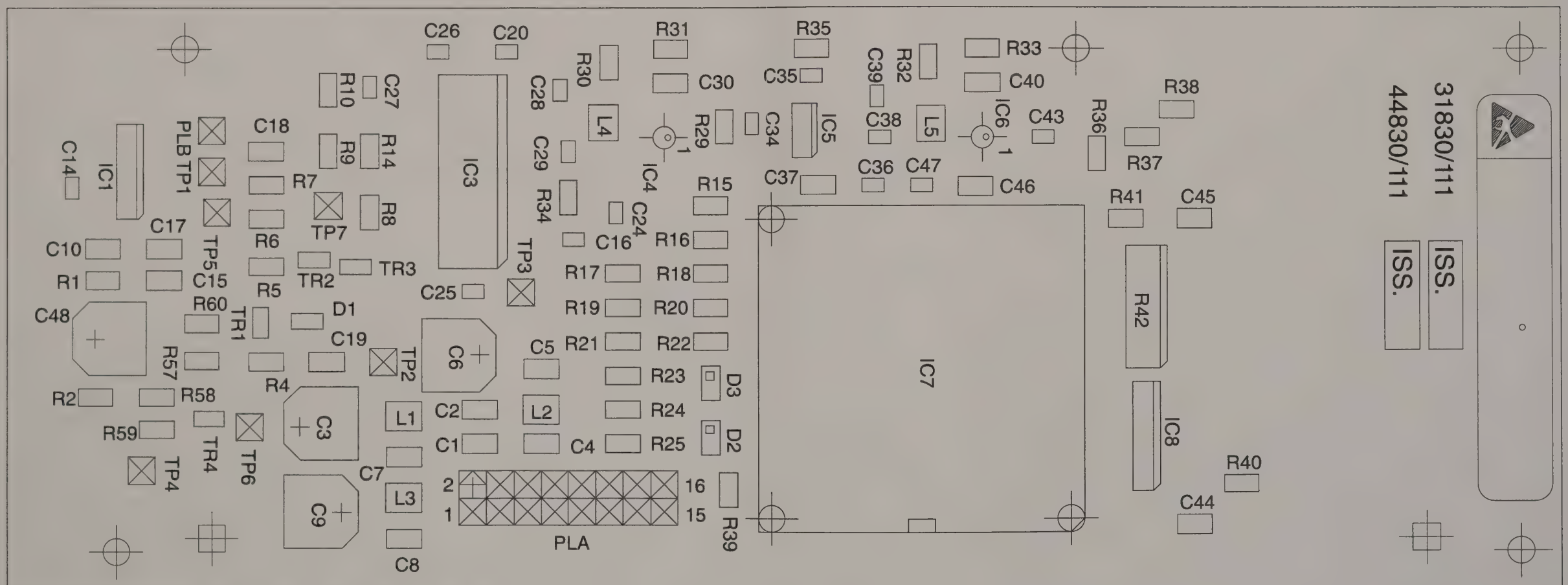

RF output amplifier and AM modulator A6/1

Drg. No. E44830/111

Fig. 7-20 A7/1 Component layout of 1st local oscillator control

Circuit diagram A7/1

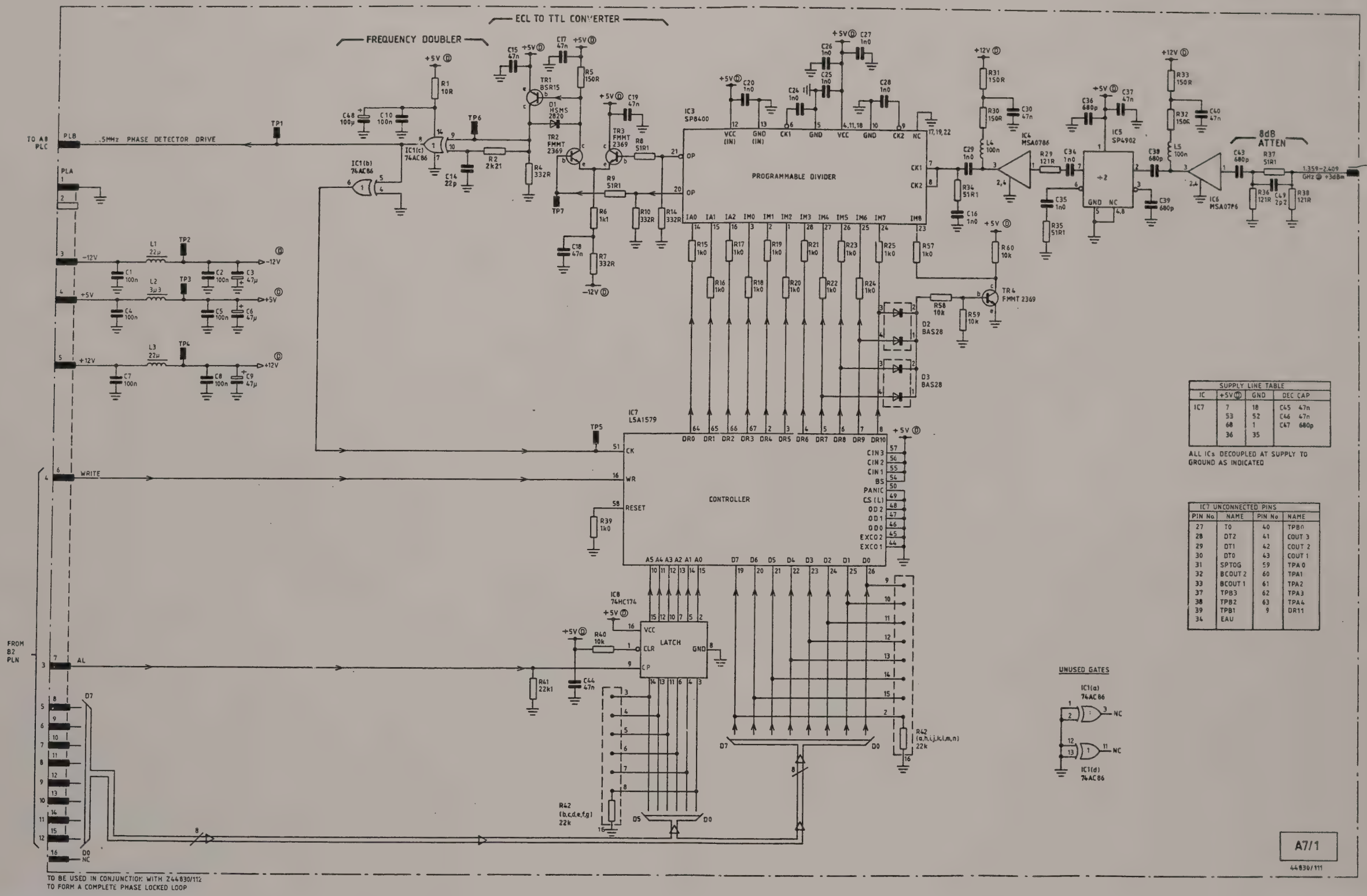

Drg. No. Z44830/111 Sheet 1 of 1 Issue 2

Fig. 7-21 A7/1 1st local oscillator control

A8/1

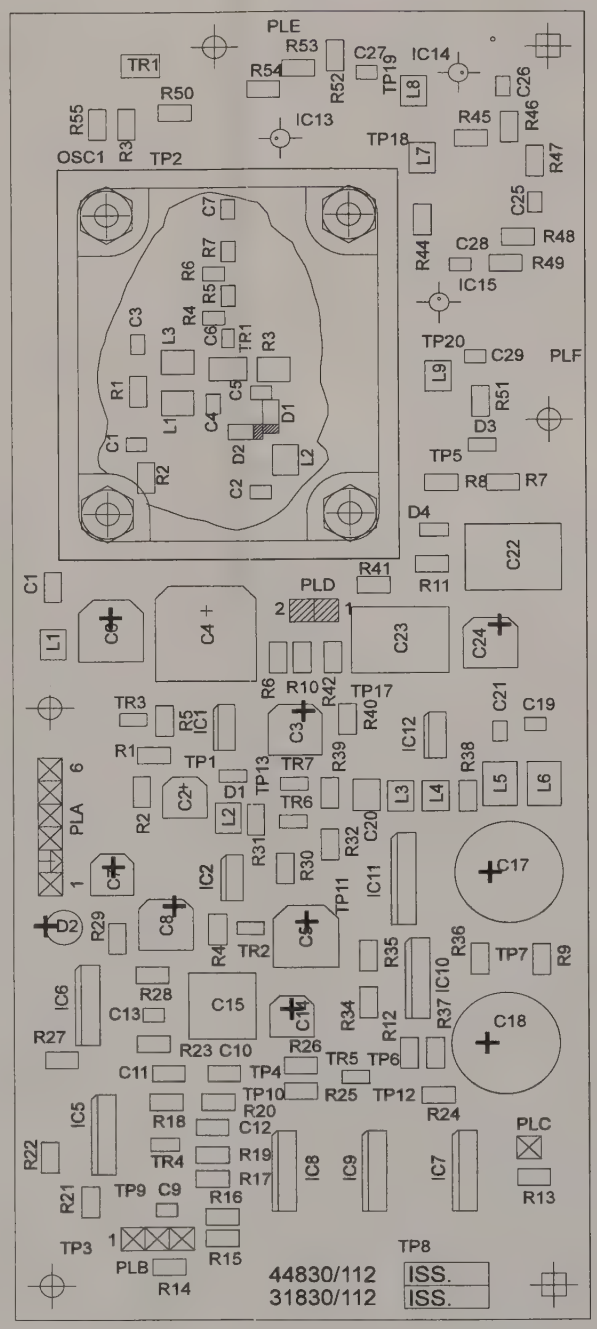

TOP SIDE

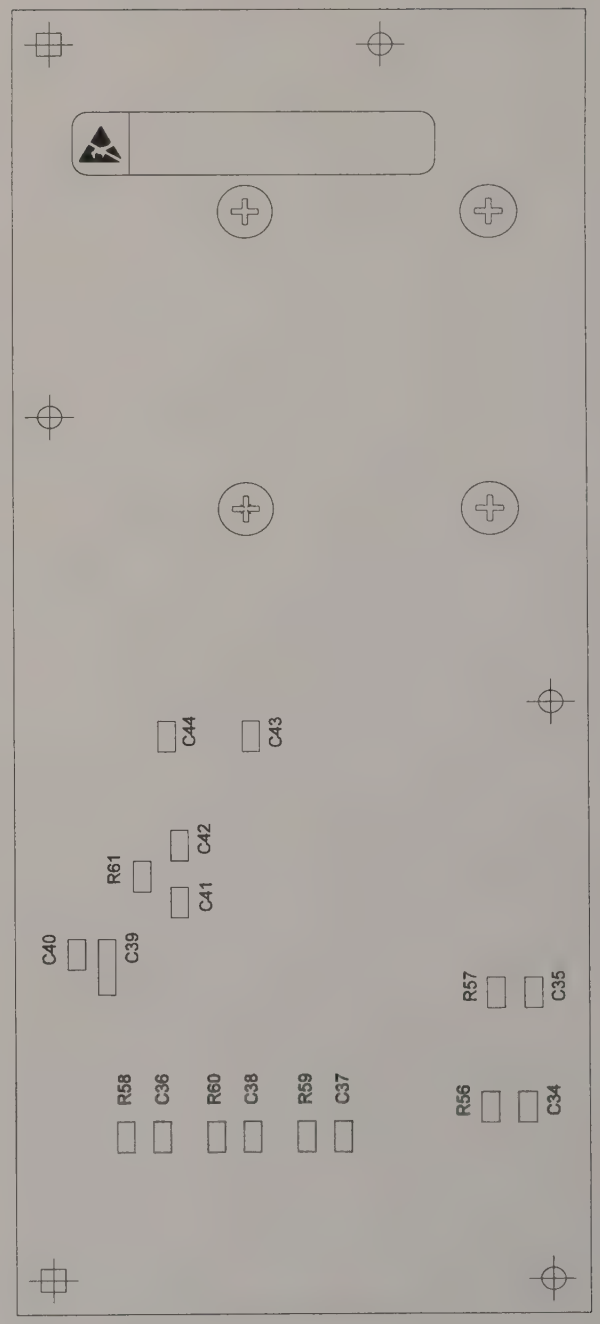

UNDER SIDE

1st local oscillator control A7/1

Drg. No. E44830/112 Issue 3

Fig. 7-22 A8/1 Component layout of 1st local oscillator

Circuit diagram A8/1

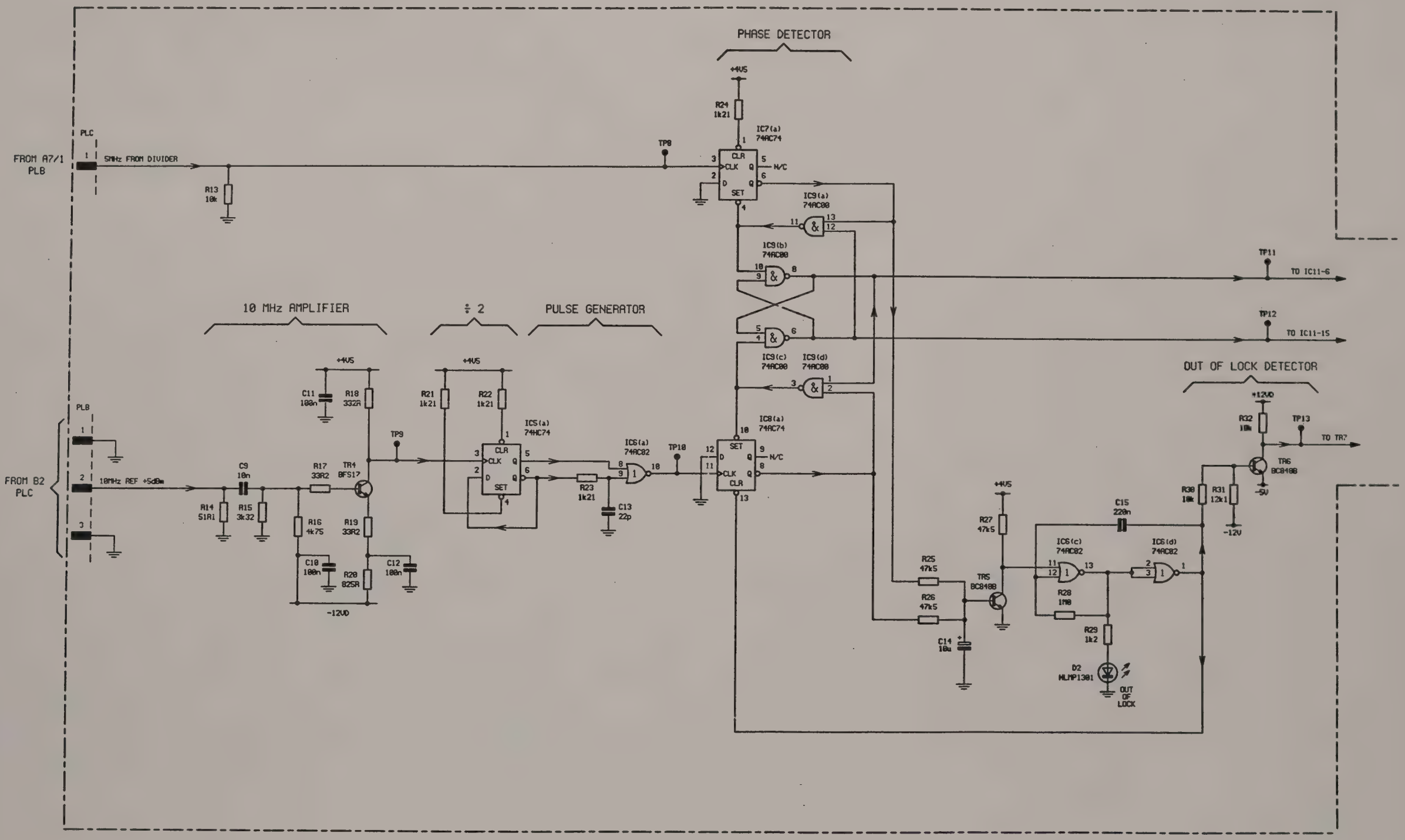

Drg. No. Z44830/112 Sheet 1 of 2 Issue 1

Fig. 7-23 A8/1 1st local oscillator

1st local oscillator **A8/1**

Circuit diagram A8/1

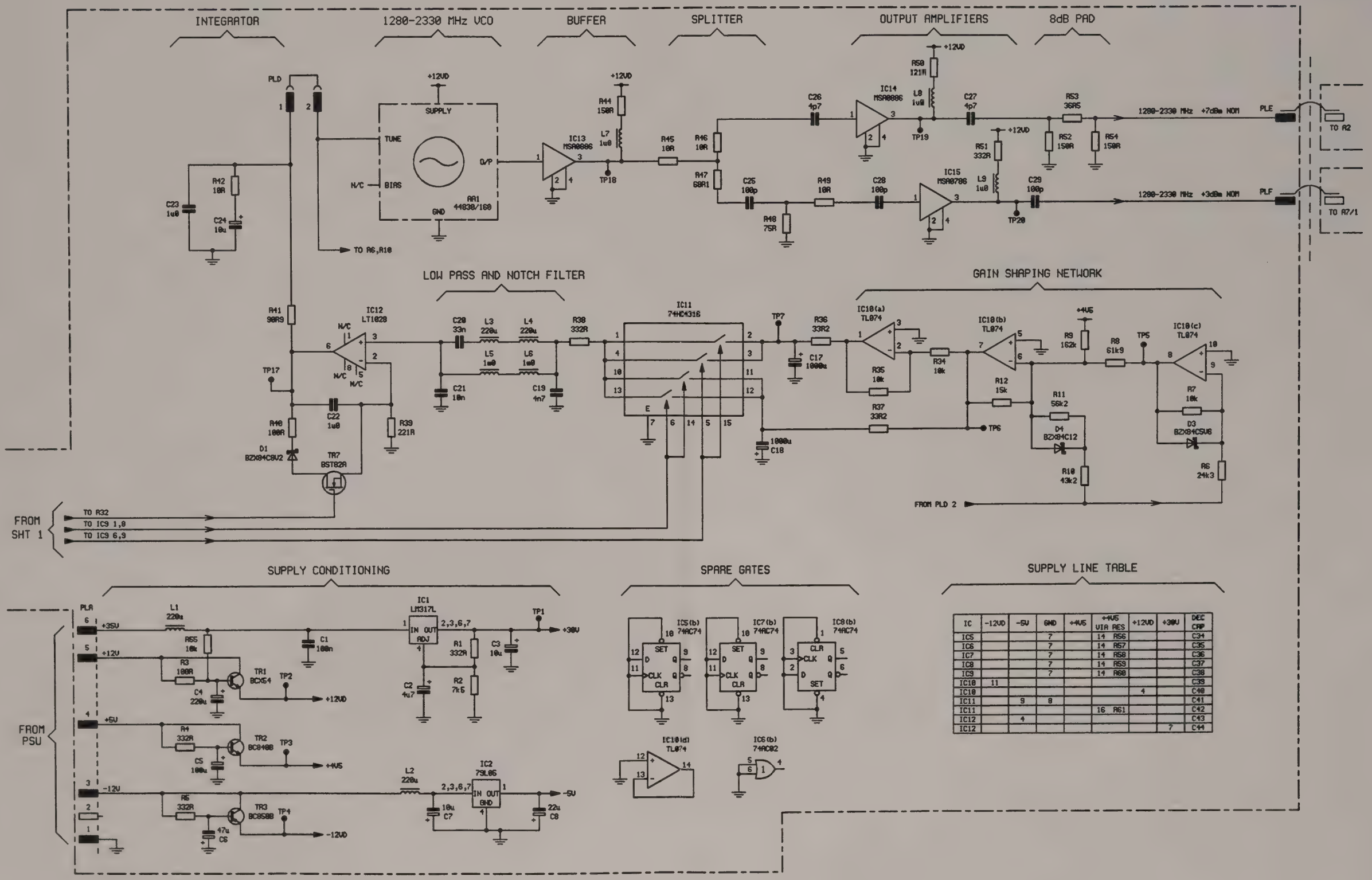

IC	-12VD	-5V	GND	+4V5	+4V5 VIA RES	+12VD	+30V	DEC CAP
IC5			7		14 R56			C34
IC6			7		14 R57			C35
IC7			7		14 R58			C36
IC8			7		14 R59			C37
IC9			7		14 R60			C38
IC10	11							C39
IC10						4		C40
IC11		9	8					C41
IC11					16 R61			C42
IC12		4						C43
IC12							7	C44

Drg. No. Z44830/112 Sheet 2 of 2 Issue 3

Fig. 7-24 A8/1 1st local oscillator

A9/1

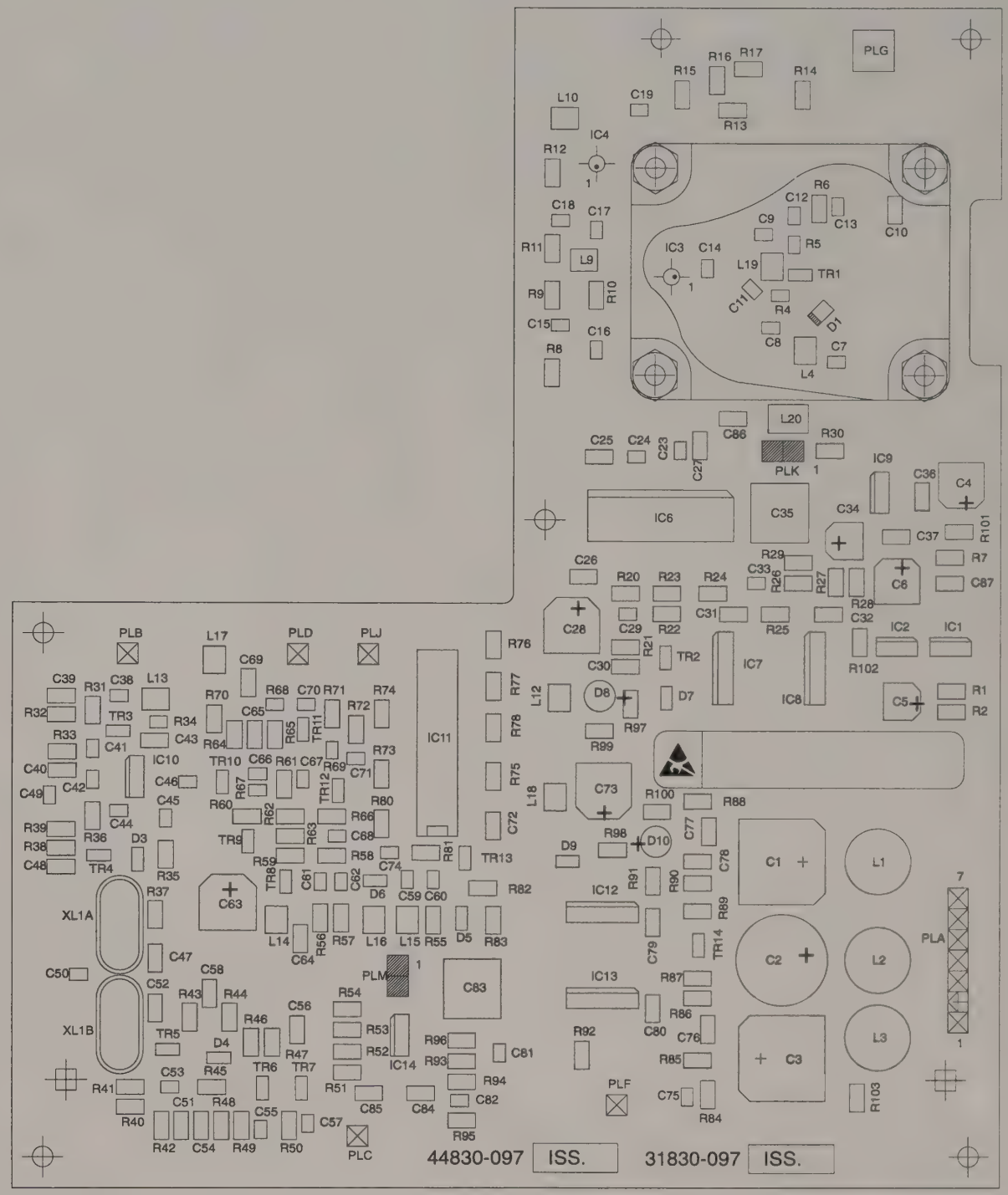

1st local oscillator A8/1

Drg. No. E44830/097 Issue 3

Fig. 7-25 A9/1 Component layout of 2nd and 3rd local oscillators

Circuit diagram A9/1

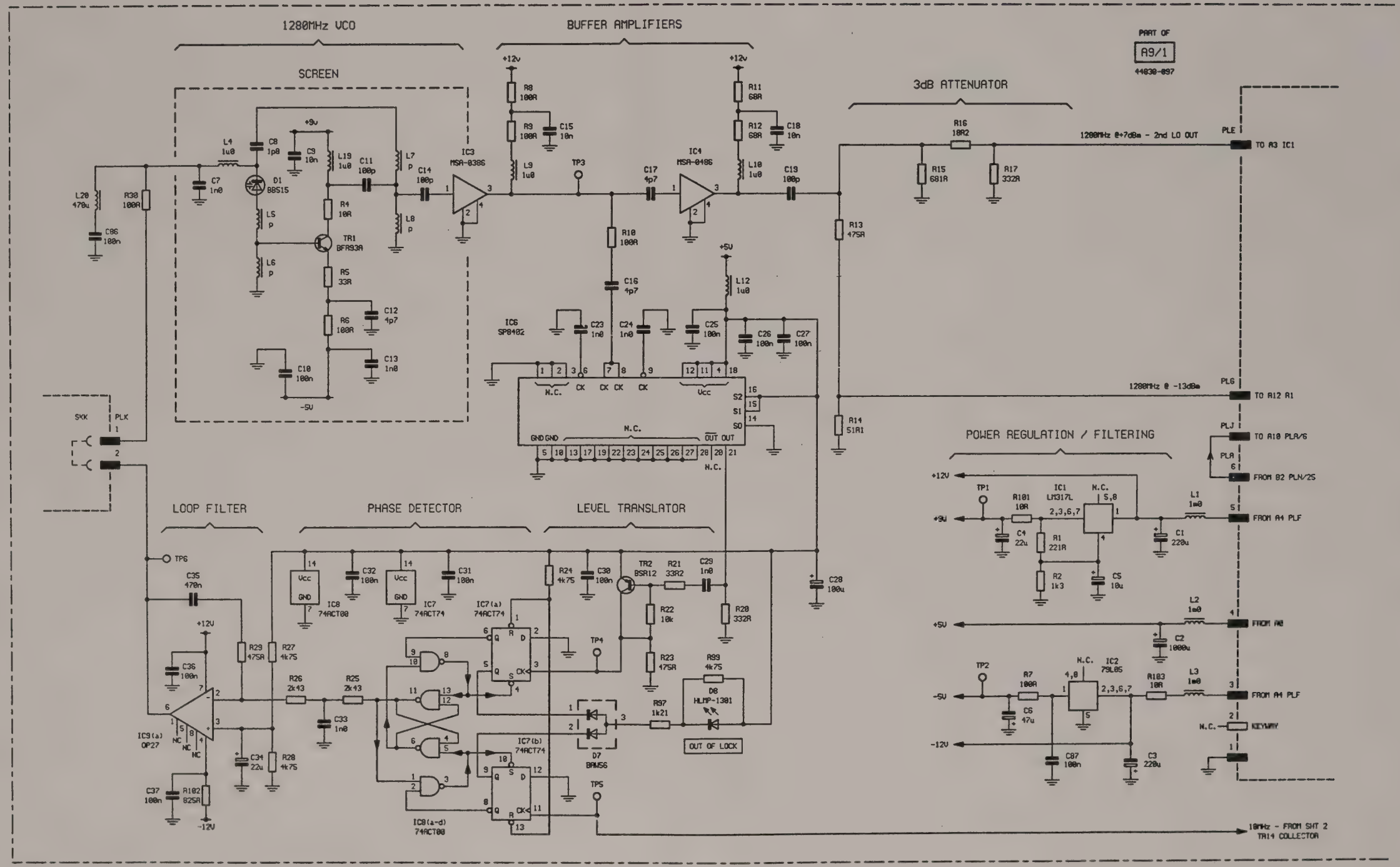

Drg. No. Z44830/097 Sheet 1 of 2 Issue 3

Fig. 7-26 A9/1 2nd and 3rd local oscillators

2nd and 3rd local oscillators **A9/1**

Circuit diagram A9/1

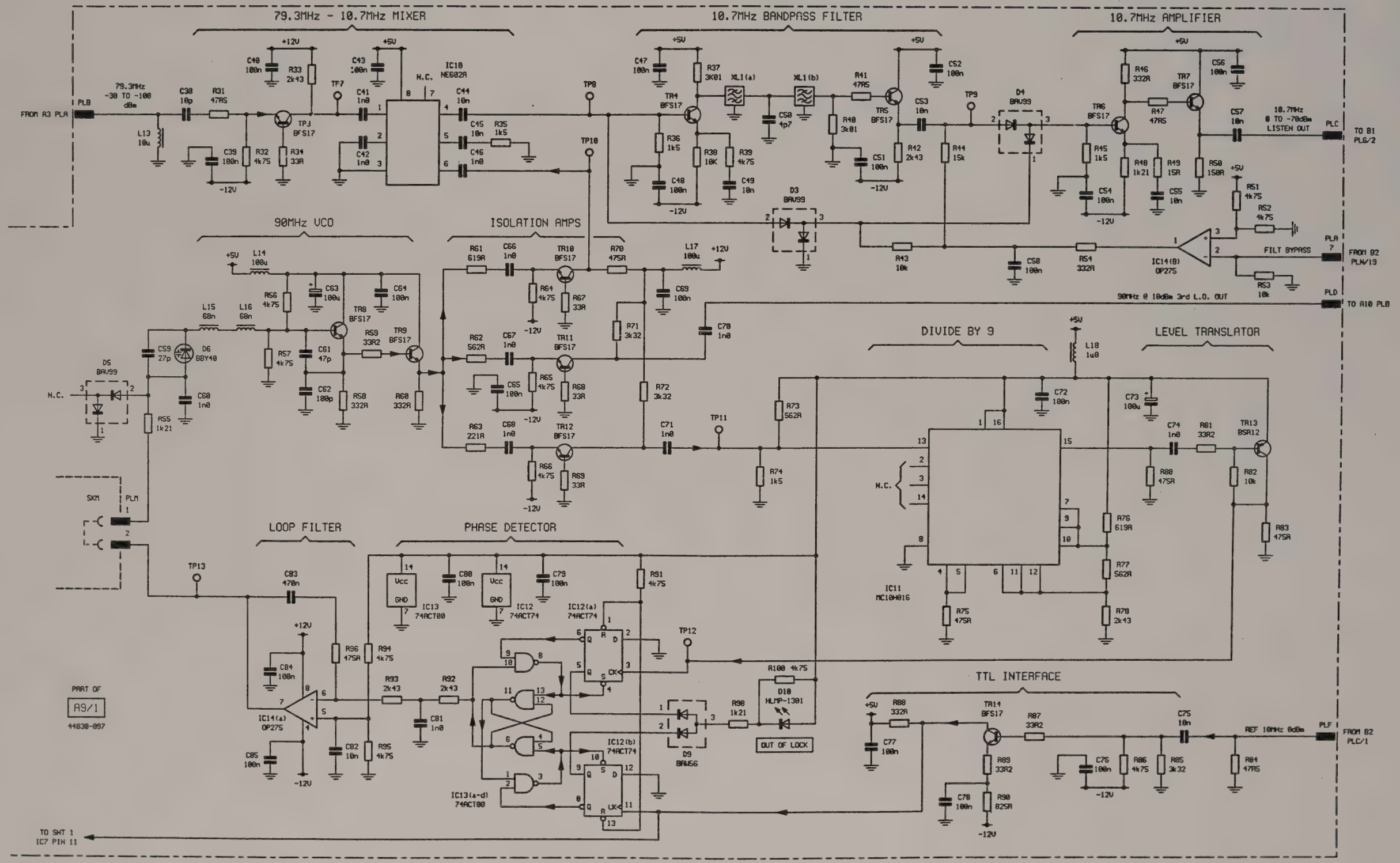

Drg. No. Z44830/097 Sheet 2 of 2 Issue 4

Fig. 7-27 A9/1 2nd and 3rd local oscillators

A10

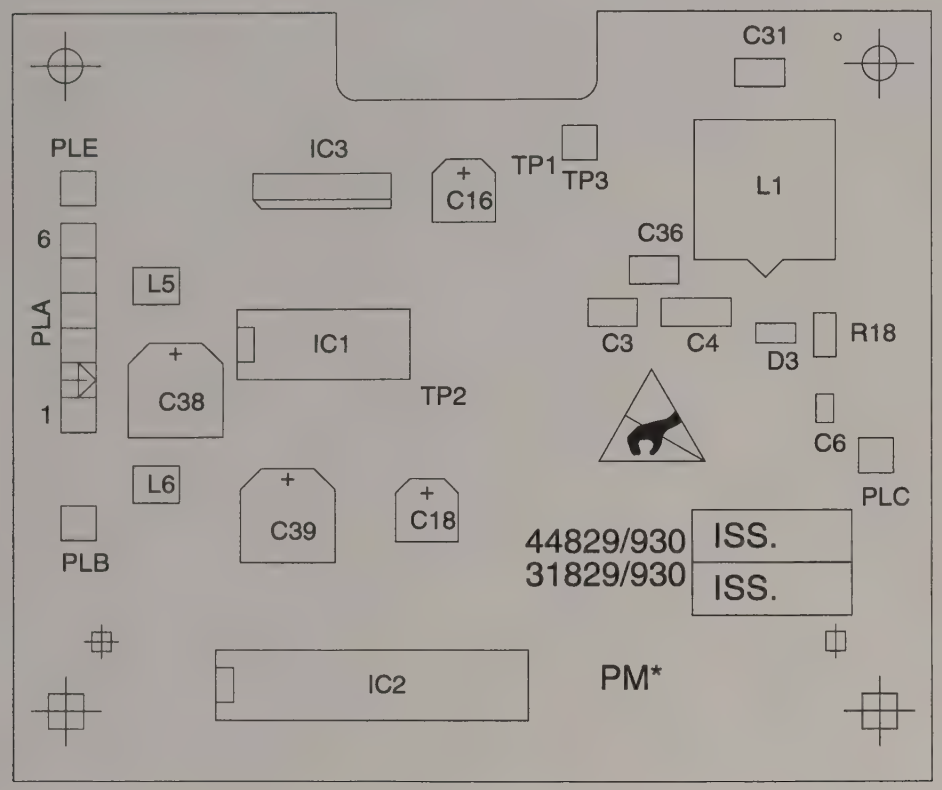

TOP SIDE

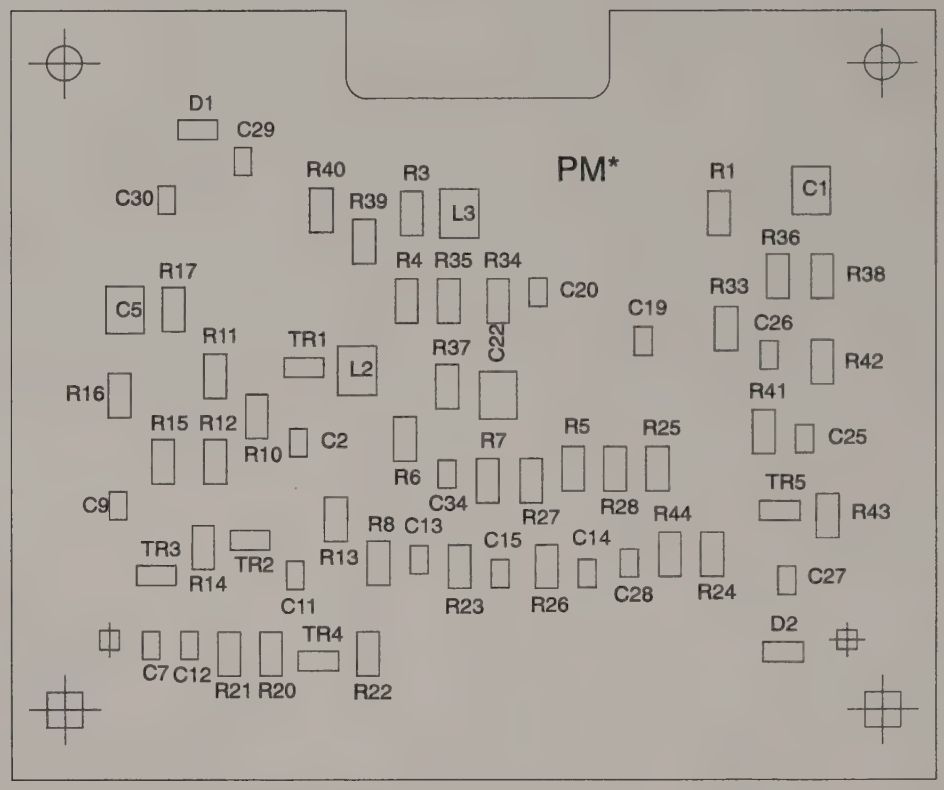

UNDER SIDE

2nd and 3rd local oscillators A9/1

Drg. No. E44829/930

Fig. 7-28 A10 Component layout of 2nd and 3rd local oscillator control

Circuit diagram A10

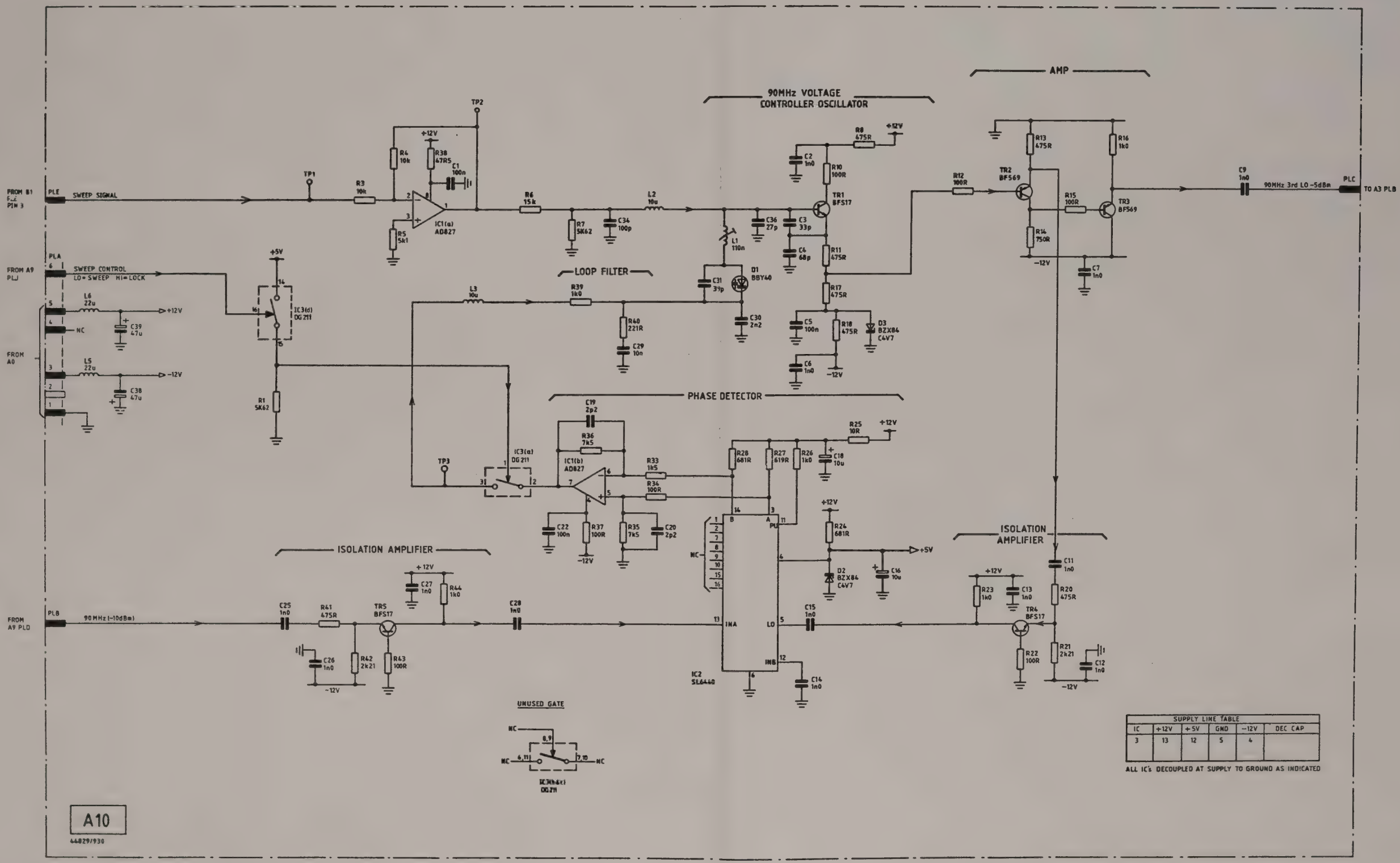

SUPPLY LINE TABLE					
IC	+12V	+5V	GND	-12V	DEC CAP
3	13	12	5	4	

ALL IC's DECOUPLED AT SUPPLY TO GROUND AS INDICATED

Drg. No. Z44829/930 Sheet 1 of 1 Issue 4

Fig. 7-29 A10 2nd and 3rd local oscillator control

A11/1

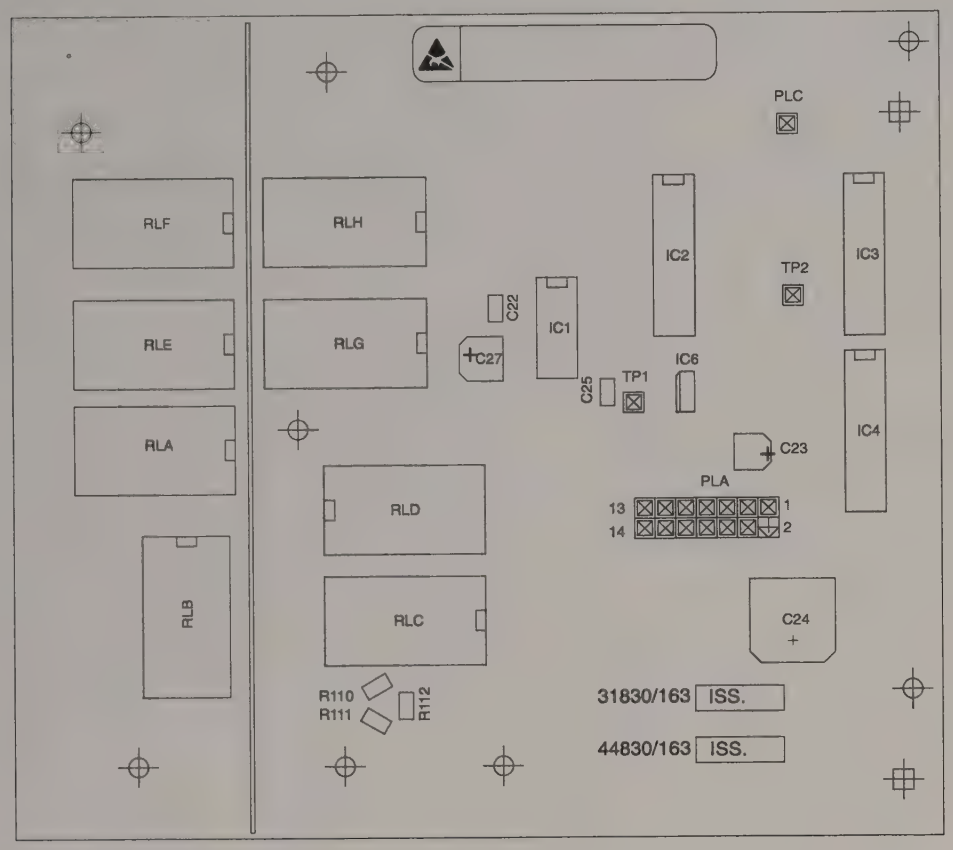

TOP SIDE

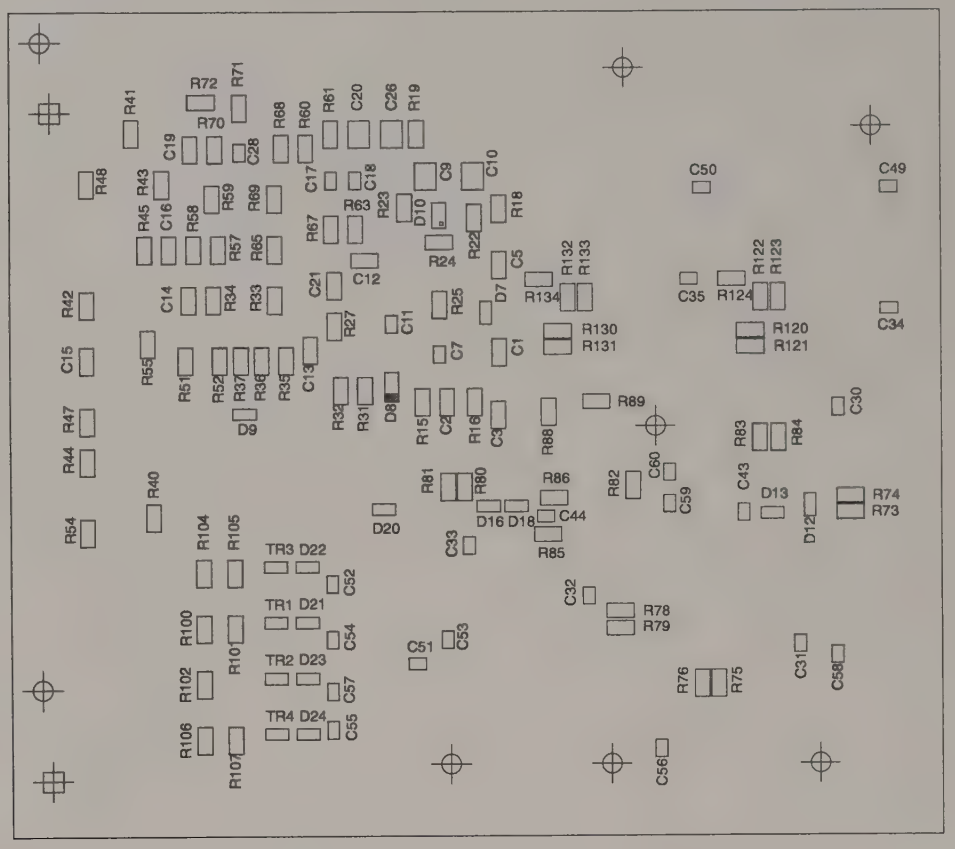

UNDER SIDE

2nd and 3rd local oscillator control A10

Drg. No. E44830/163 Issue 1

Fig. 7-30 A11/1 Component layout of input /output switching

Circuit diagram A11/1

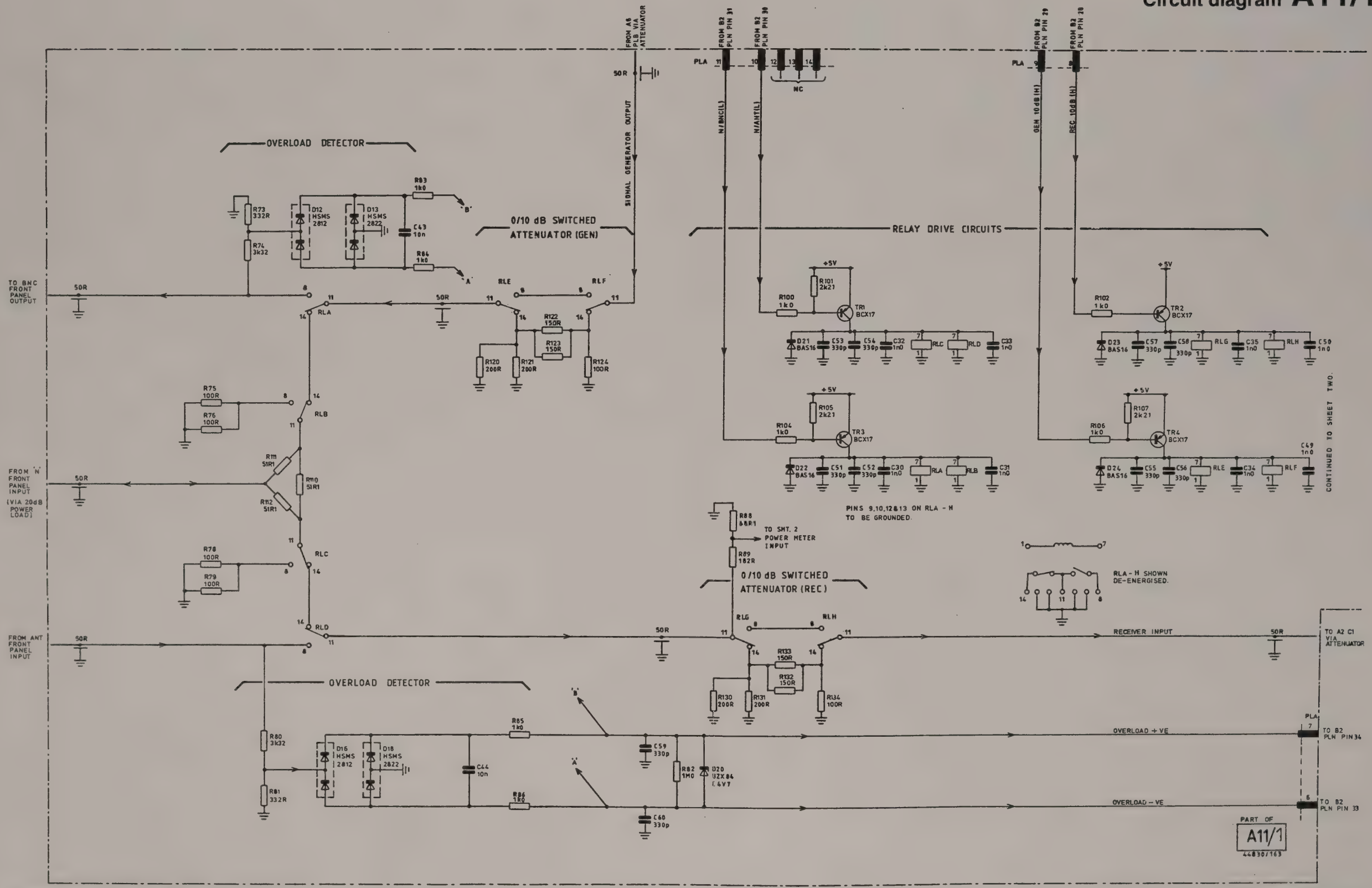

Drg. No. Z44830/163 Sheet 1 of 2, Issue 1

Fig. 7-31 A11/1 Input/output switching

Input/output switching **A11/1**

Circuit diagram A11/1

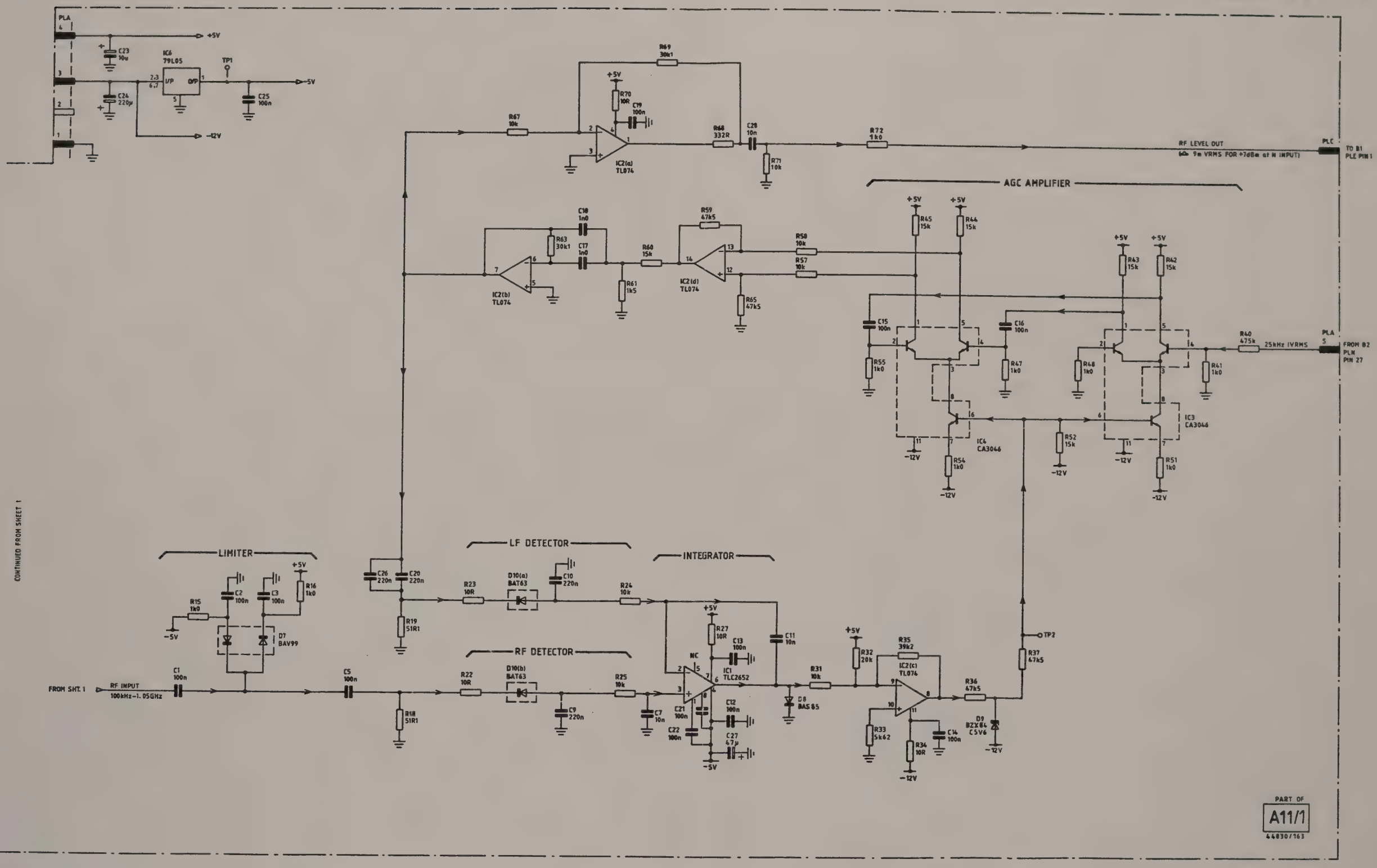

Drg. No. Z44830/163 Sheet 2 of 2 Issue 1

Fig. 7-32 A11/1 Input/output switching

A15

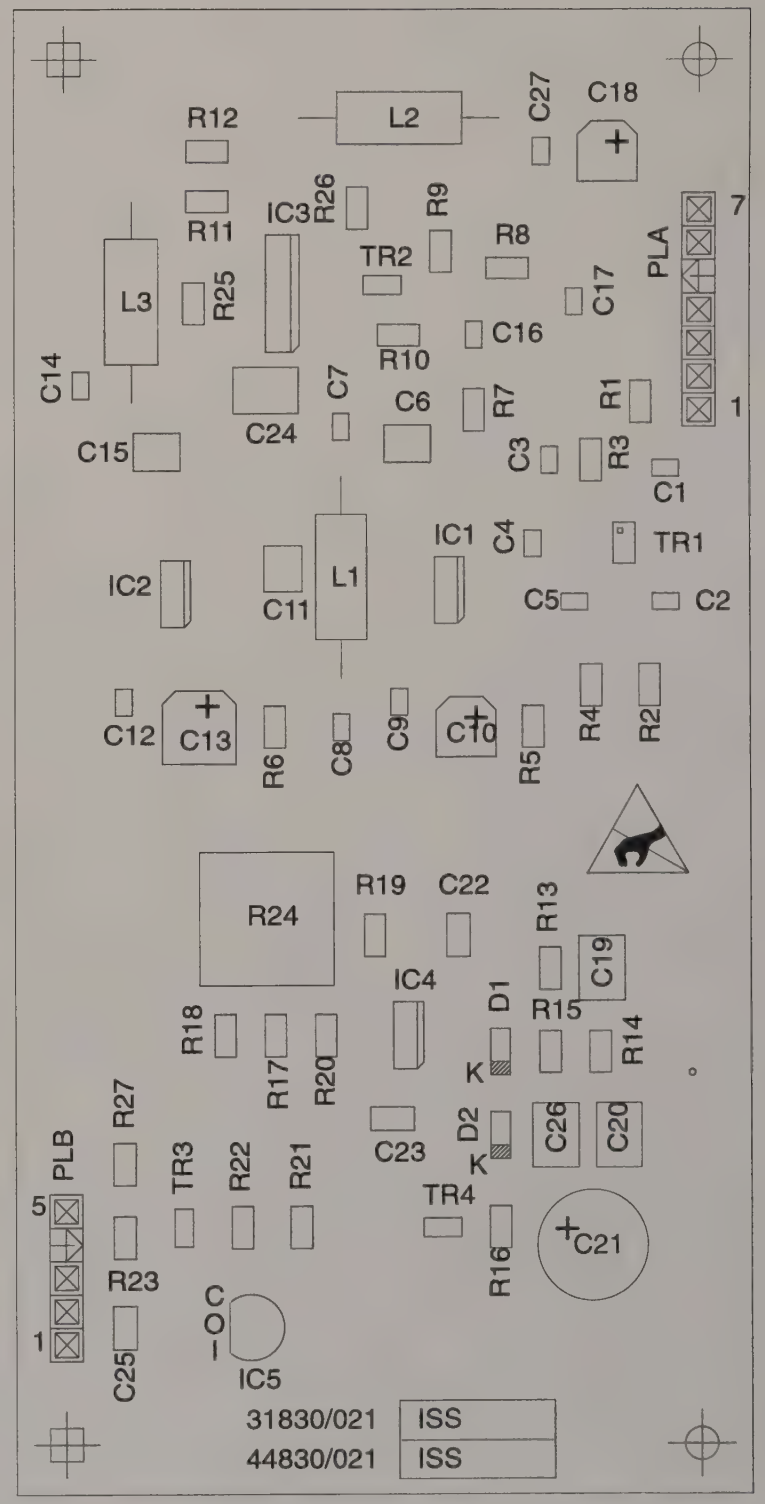

Fig. 7-33 A15 Component layout of single sideband demodulator

Input/output switching **A11/1**

Drg. No. E44830/021 Issue 1

Circuit diagram A15

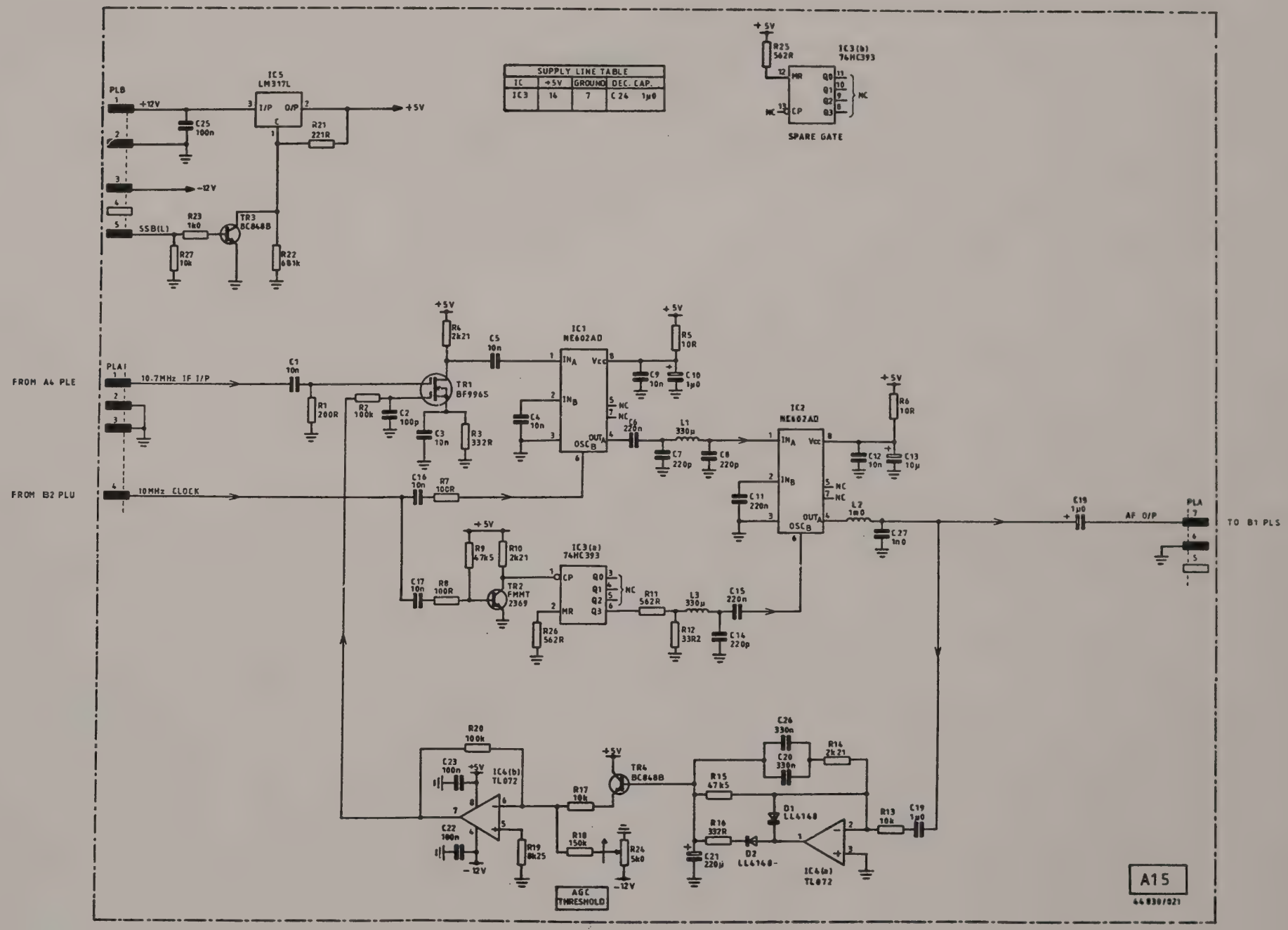

Drg. No. Z44830/021 Sheet 1 of 1 Issue 1

Fig. 7-34 A15 Single sideband demodulator

A20

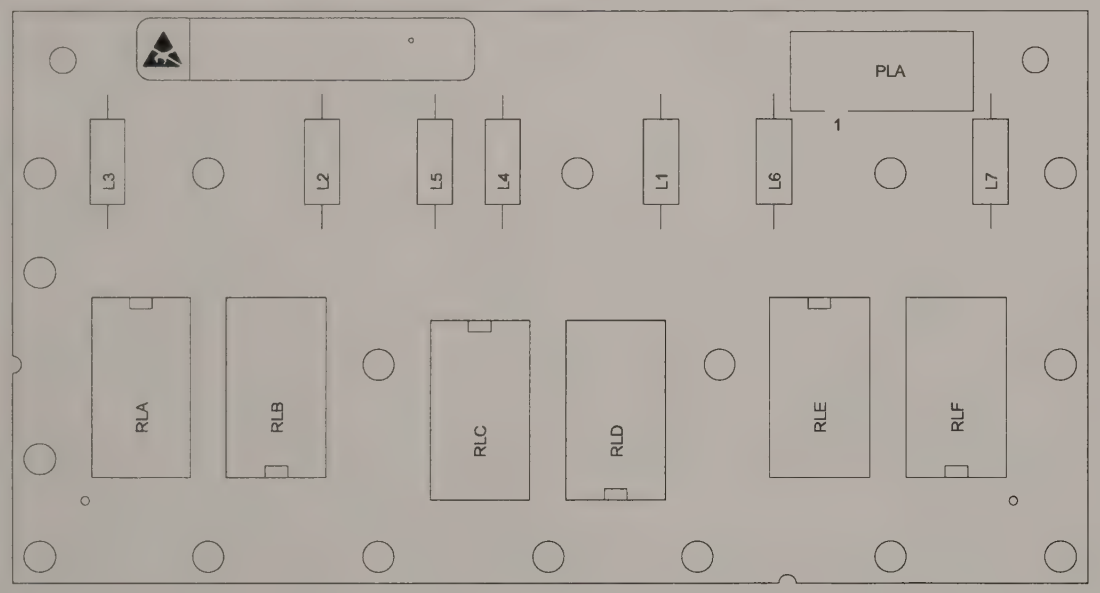

TOP SIDE

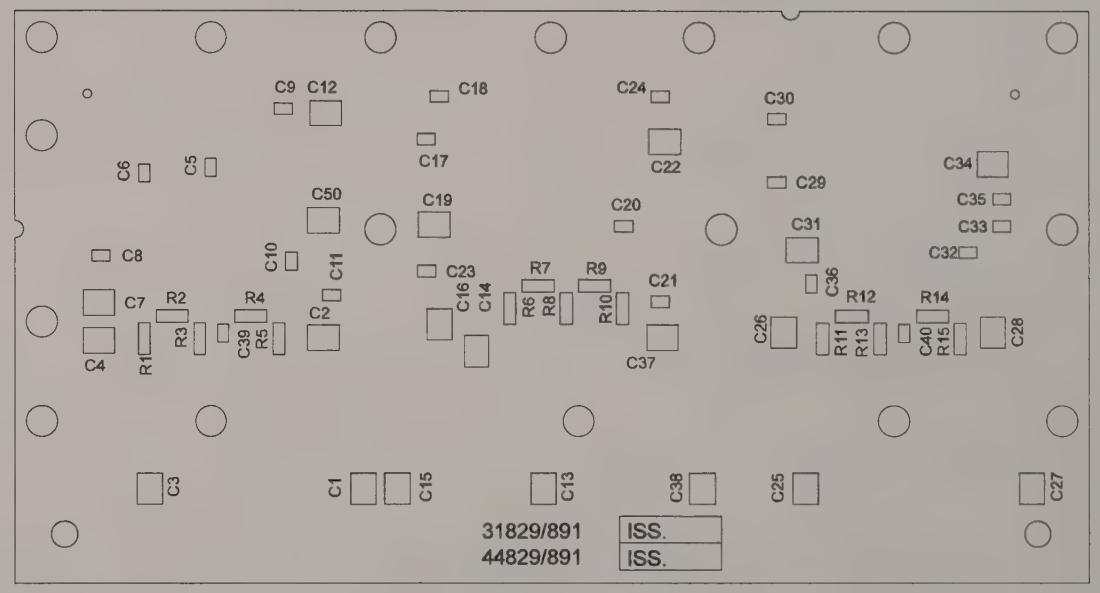

UNDER SIDE

Single sideband demodulator A15

Drg. No. E44429/080

Fig. 7-35 A20 Component layout of RF generator output attenuator

Circuit diagram A20

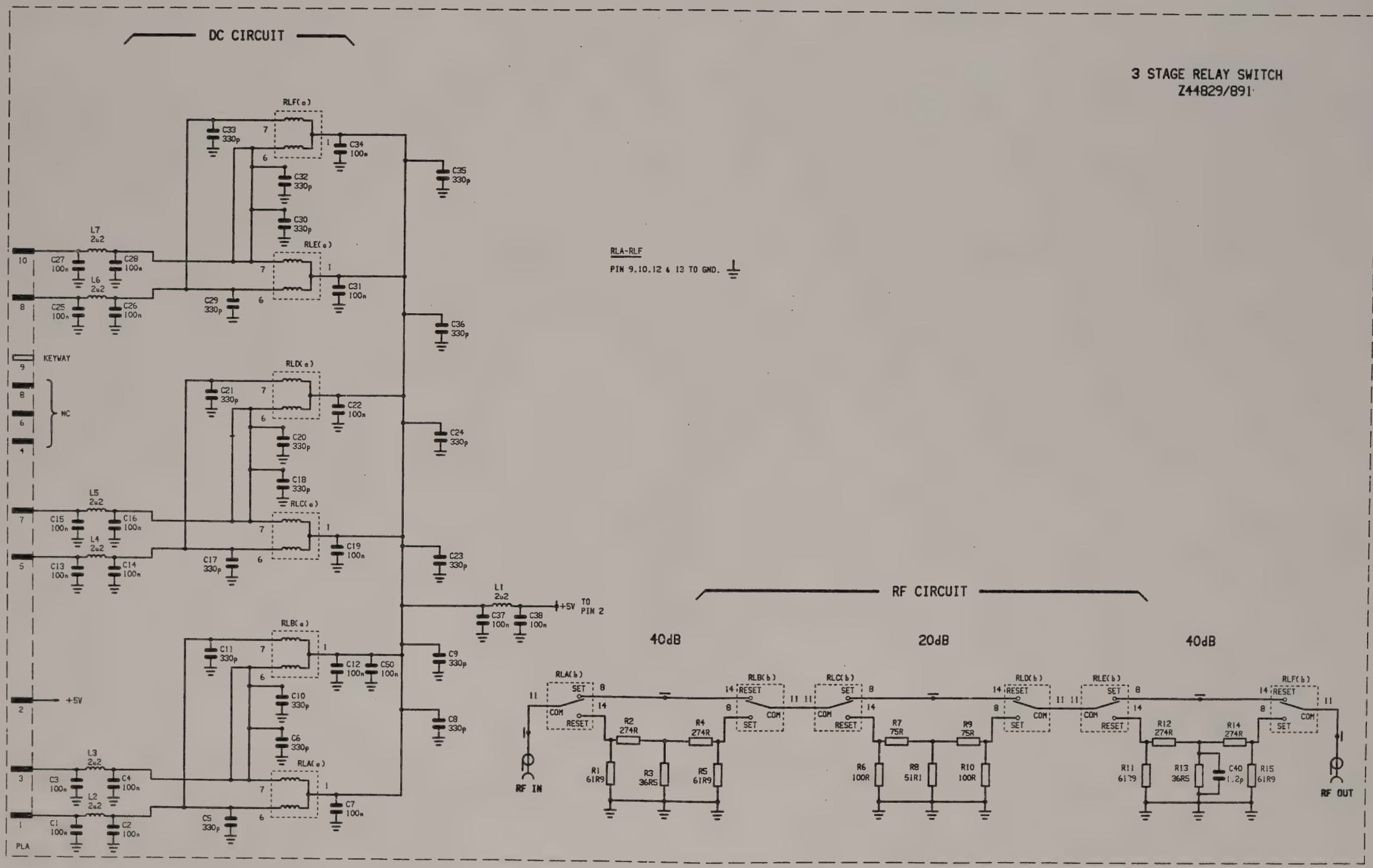

Drg. No. Z44429/080 Sheet 1 of 1 Issue 1

Fig. 7-36 A20 RF generator output attenuator

A21

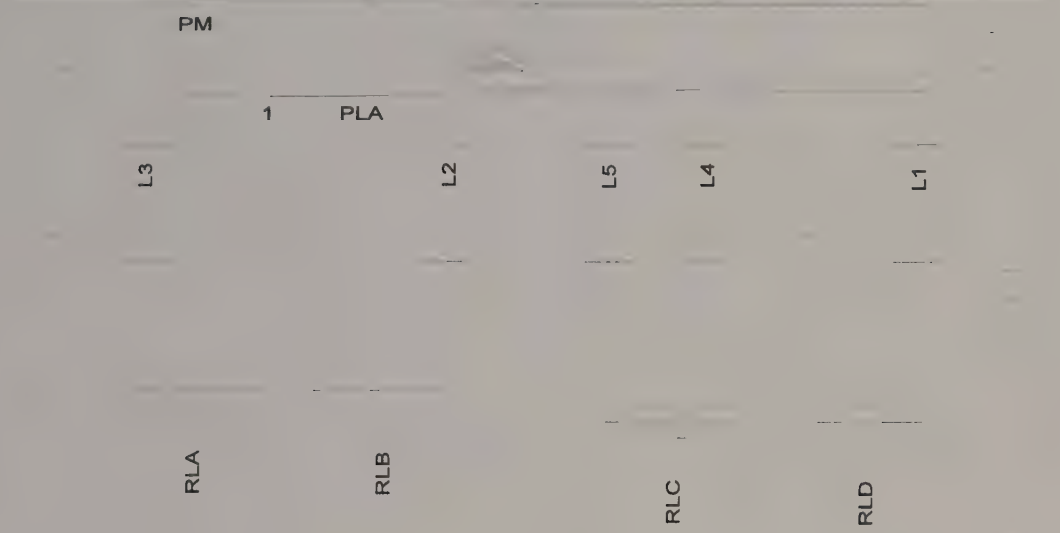

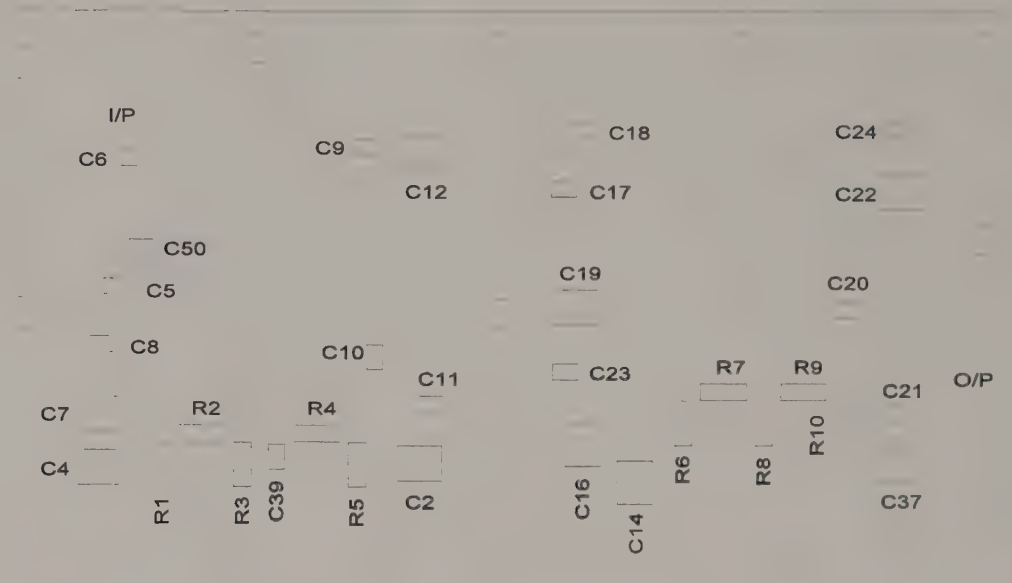

TOP SIDE

UNDER SIDE

RF generator output attenuator **A20**

Drg. No. E44429/081

Fig. 7-37 A21 Component layout of Input attenuator

Circuit diagram A21

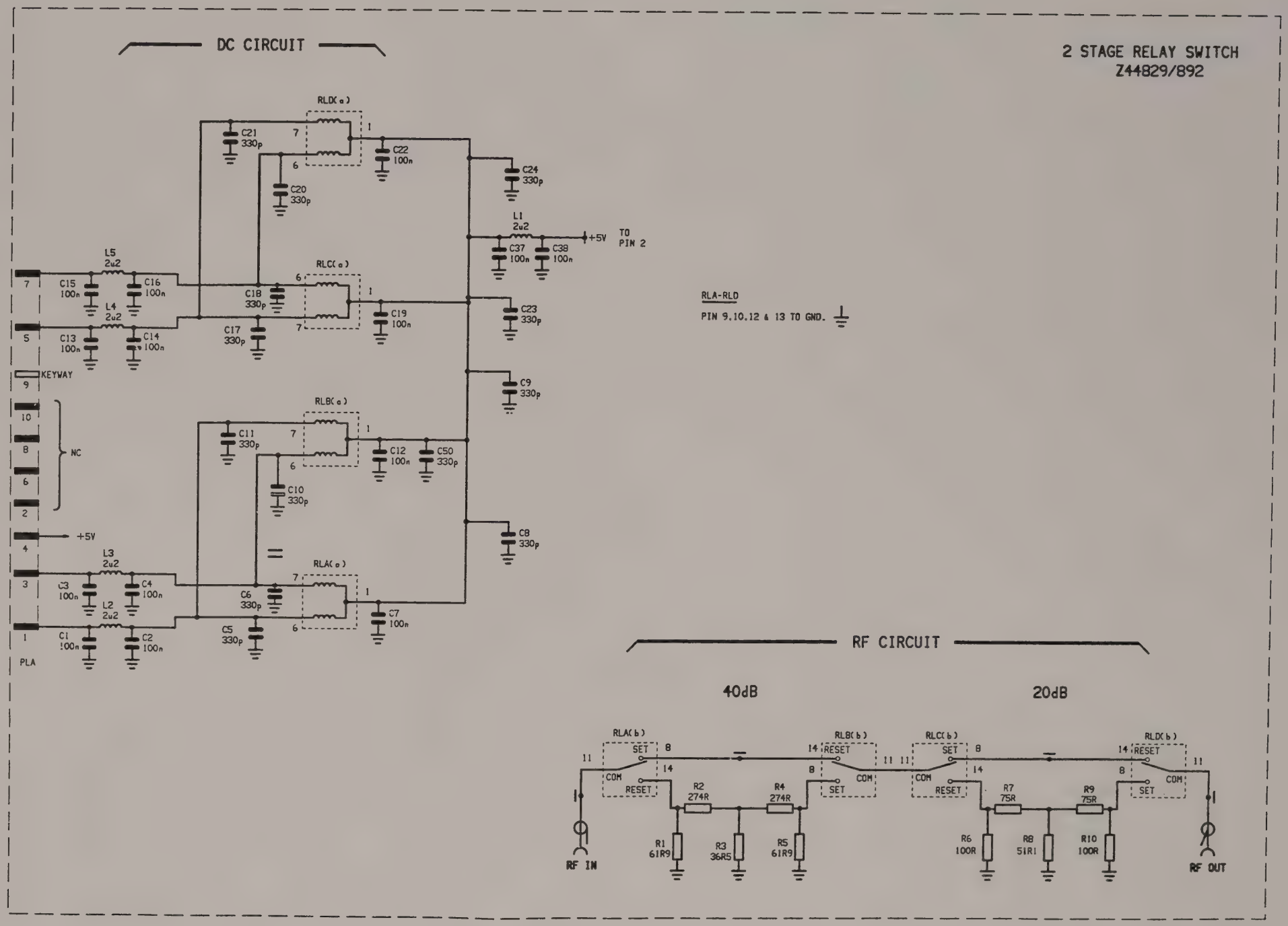

Drg. No. Z44429/081 Sheet 1 of 1 Issue 2

Fig. 7-38 A21 Input attenuator

AF3

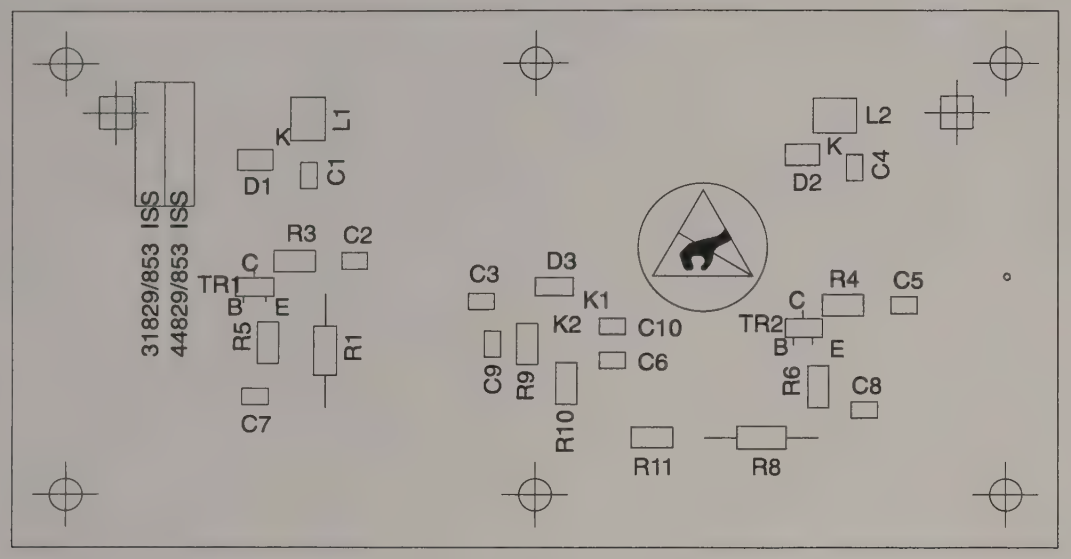

TOP SIDE

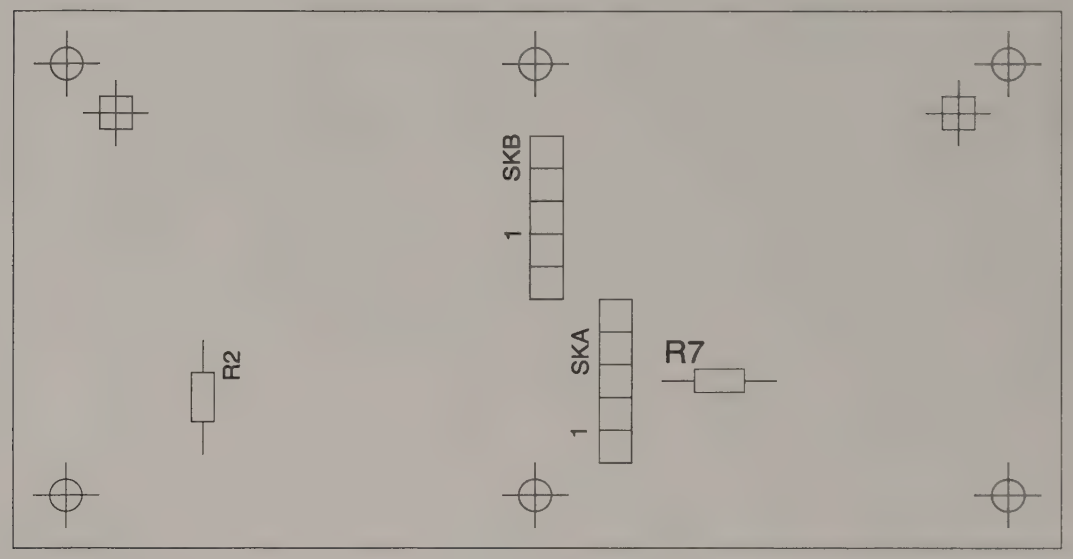

UNDER SIDE

Input attenuator **A21**

Drg. No. E44429/853

Fig. 7-39 AF3 Component layout of VCO Sub-board

Circuit diagram AF3

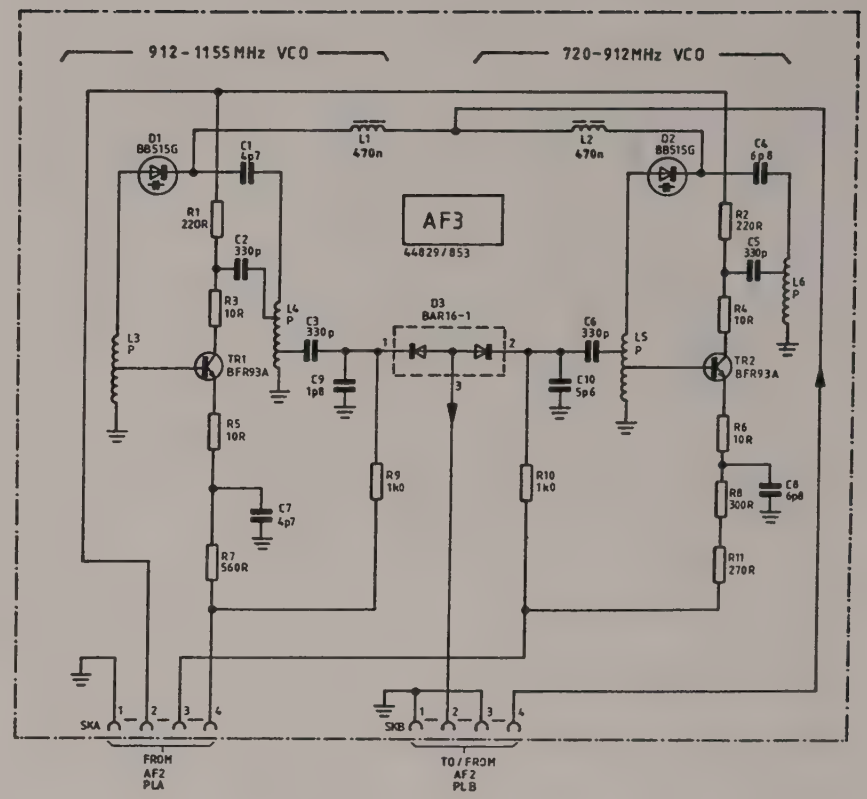

Drg. No. Z44429/853 Sheet 1 of 1 Issue 4

Fig. 7-40 AF3 VCO Sub-board

B1/2

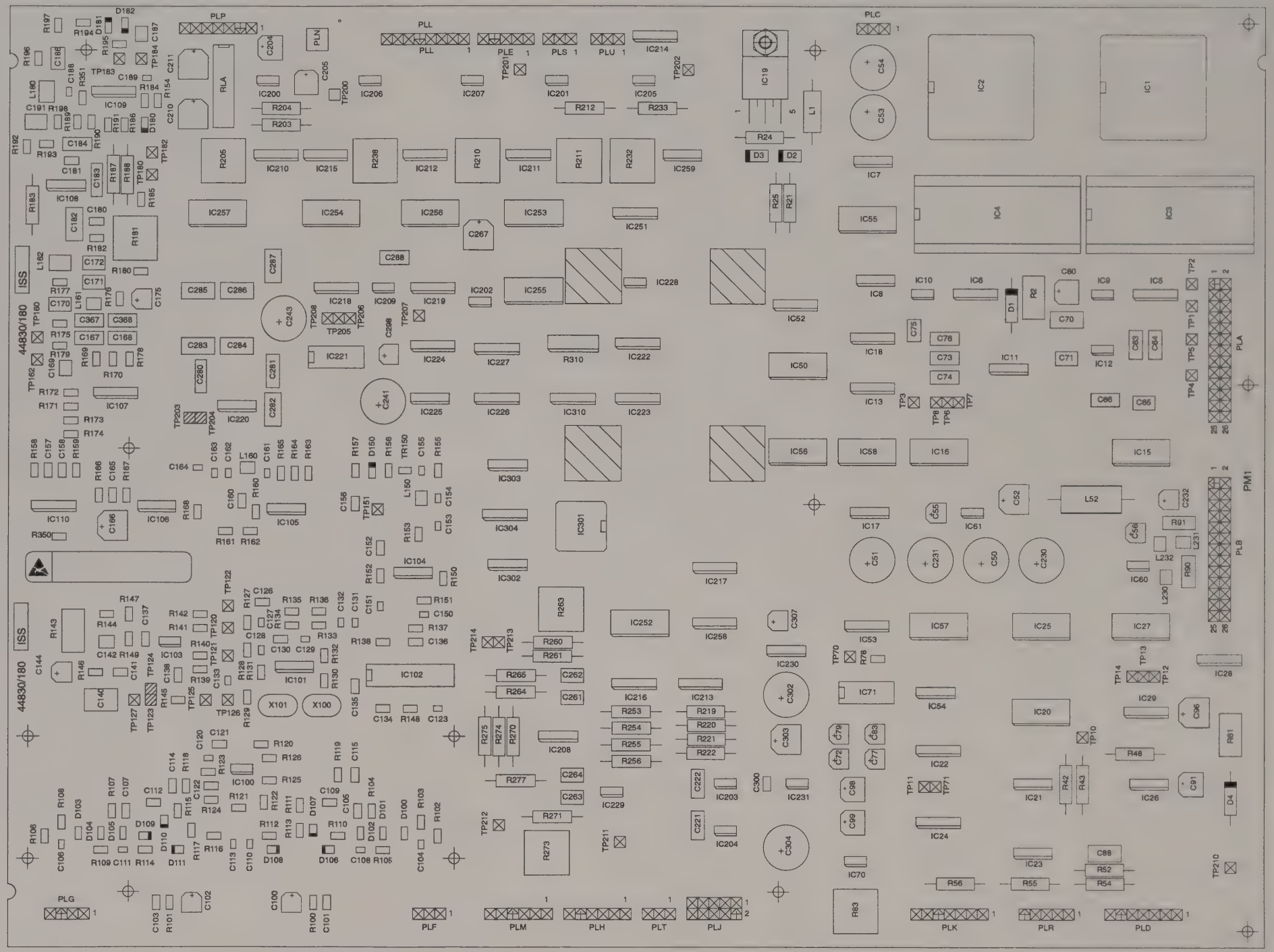

TOP SIDE

VCO Sub-board **AF3**

Drg. No. E44830/180 Issue 2

Fig. 7-41 B1/2 Component layout of Audio processor - top side

Circuit diagram B1/2

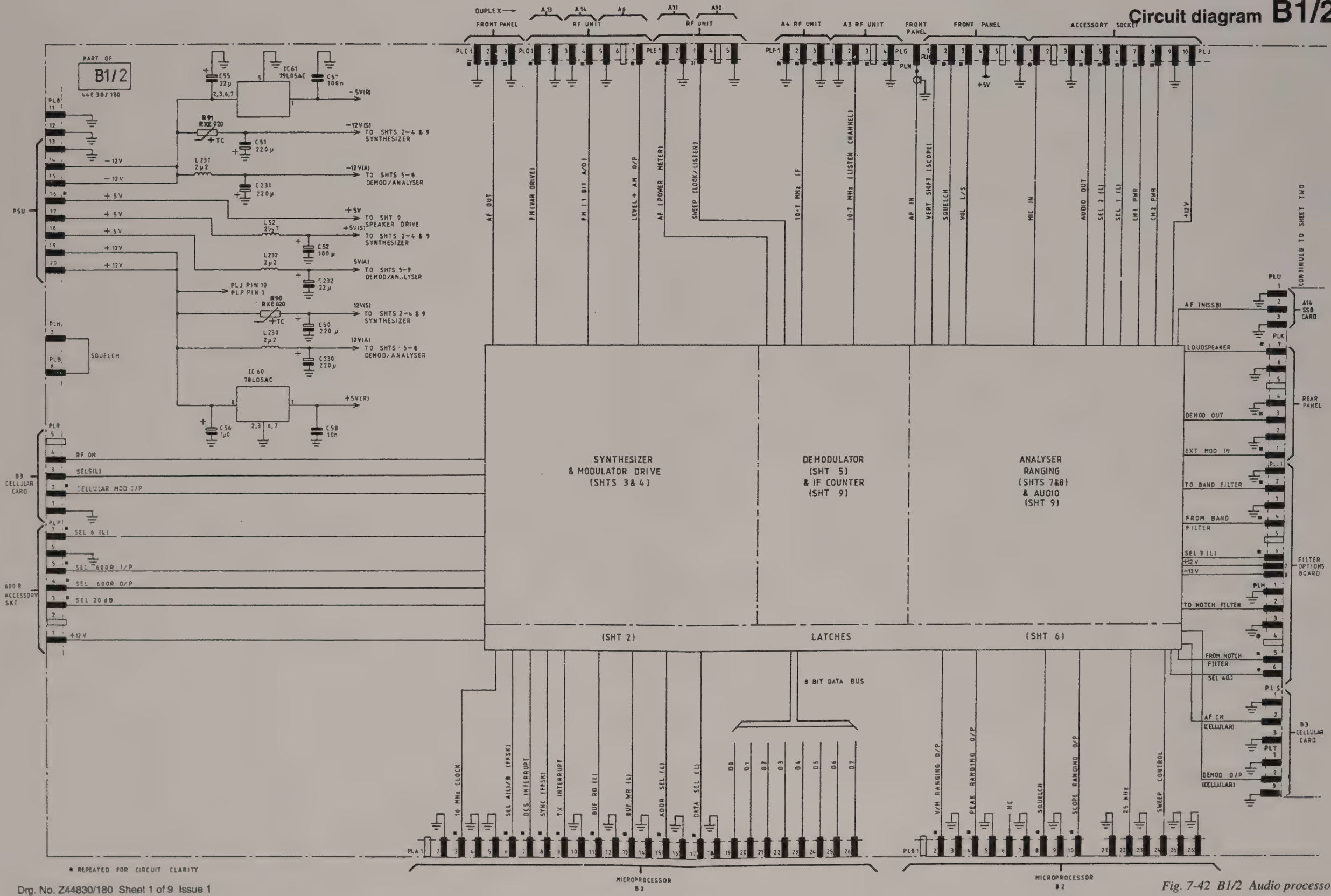

Drg. No. Z44830/180 Sheet 1 of 9 Issue 1

Fig. 7-42 B1/2 Audio processor

B1/2

UNDER SIDE

Audio processor B1/2

Drg. No. E44830/180 Issue 1

Fig. 7-43 B1/2 Component layout of audio processor board - under side

Circuit diagram B1/2

PART OF B1/2
44830/180

—ADDRESS LATCH—

IC50 74HC377 — +5V(S), Vcc pin 20, GND pin 10, EN pin 1, CK pin 11
D0–D7 ← FROM PLA 19–26 FROM 8-BIT DATA BUS D0–D7
R310 22k — +5V(A) — (k) (j) (i) — SEE SHT 9
PLA 13 BUF WR(L) → CK
PLA 15 ADDR SEL(L)
Q0–Q7 → A0–A7
3 A0–A2 → LATCHED ADDRESS BUS TO SHT 3 IC 1 PINS 12, 13 & 14 IC 2 PINS 12, 13 & 14 TO SHT 9 IC301 PINS 22 & 23
5 A3–A7 → TO SHT 6 ADDRESS BUS IC 251

IC52 74HC138 — +5V(S), Vcc pin 16, GND pin 8
A0 A1 A2 ← A0 A1 A2
E3 ← A3 ; E2 ← A4 ; E1 ← A5
Y0 → 15 IC55 EN(L)
Y1 → 14 CS 1 (L) → TO SHT 3 IC1 PIN 15
Y2 → 13 CS 2 (L) → TO SHT 3 IC2 PIN 15
Y3 → 12 IC58 EN(L)
Y4 → 11 CS AF1 LEVEL(L) → TO SHT 3 IC15 PIN 16
Y5 → 10 CS AF2 LEVEL(L) → TO SHT 3 IC16 PIN 16
Y6 → 9 IC56 EN(L)
Y7 → 7 IC57 EN(L)

IC54(a) 74HC04 — 1 → 2, 5 → 6

IC53 74HC138 — +5V(S), Vcc pin 16, GND pin 8
A0 A1 A2 ← A0 A1 A2
E3 ← A6 ; E2 ← A7 ; E1 ← GND
Y0 → 15 CS EXT MOD LEVEL (L) → TO SHT 4 IC20 PIN 16
Y1 → 14 CS MOD CORRECT (L) → TO SHT 4 IC25 PIN 16
Y2 → 13 CS RF LEVEL (L) → TO SHT 4 IC 27 PIN 16
Y3 → 12 CS IF CNTR (L) → TO SHT 9 IC 301 PIN 24
Y4 → 11 EN BIN CNTR (L) → TO SHT 9 IC 303 PINS 2 & 12
Y5 → 10 CLR BIN CNTR (L) → TO SHT 9 IC 304 PIN 1
Y6 → 9 CS FM ATTEN (L) → TO SHT 4 IC 28 PIN 12
Y7 → 7 NC

IC54 74HC04 — +5V(S), Vcc pin 14, GND pin 7 — 13 → 12 NC

IC55 74HC377 — +5V(S), Vcc pin 20, GND pin 10, EN pin 1, CK pin 11 ← D7 BUF WR(L)
D0–D7 ← 8-BIT DATA BUS D0–D7
Q0 → 2 SEL DCS (L) → TO SHT 3 IC 8 PIN 13 & IC54 PIN 3
Q1 → 5 DCS DATA → TO SHT 3 IC 7 PIN 12
Q2 → 6 GEN 1/A13 → TO SHT 3 IC3 PIN 26
Q3 → 9 GEN 1/A14 → TO SHT 3 IC3 PIN 27
Q4 → 12 GEN 1/A15 → TO SHT 3 IC3 PIN 1
Q5 → 15 GEN 2/A13 → TO SHT 3 IC7 PIN 2
Q6 → 16 GEN 2/A14 → TO SHT 3 IC4 PIN 27
Q7 → 19 GEN 2/A15 → TO SHT 3 IC4 PIN 1

IC56 74HC377 — +5V(S), Vcc pin 20, GND pin 10, EN pin 1, CK pin 11 ← D7 BUF WR(L)
D0–D7 ← 8-BIT DATA BUS D0–D7
Q0 → 2 SEL AF 2 WIDEBAND → TO SHT 3 IC18 PIN 6
Q1 → 5 FM DEMOD DISABLE → TO SHT 5 IC104 PIN 12
Q2 → 6 SEL AF 2 140 LP → TO SHT 3 IC18 PIN 15
Q3 → 9 SEL AF 2 50k LP → TO SHT 3 IC18 PIN 5
Q4 → 12 SEL EXT MOD I/P (L) → TO SHT 4 IC 22 PIN 1
Q5 → 15 SEL MOD/AF OPT (L) → TO SHT 4 IC 22 PIN 8
Q6 → 16 SEL MIC (L) → TO SHT 4 IC 22 PIN 9
Q7 → 19 SEL AF1 MOD (L) → TO SHT 4 IC 22 PIN 16

IC57 74HC377 — +5V(S), Vcc pin 20, GND pin 10, EN pin 1, CK pin 11 ← D7 BUF WR(L)
D0–D7 ← 8-BIT DATA BUS D0–D7
Q0 → 2 SEL AF 2 MOD (L) → TO SHT 4 IC24 PIN 1
Q1 → 5 SEL EXT MOD (L) → TO SHT 4 IC 24 PIN 8
Q2 → 6 SEL PRE-EMP (L) → TO SHT 4 IC 24 PIN 16
Q3 → 9 TOGGLE → TO SHT 9 D71
Q4 → 12 FM (L) /AM → IC54(d) 74HC04 → FM/AM (L) → TO SHT 4 IC 29 PIN 16
Q5 → 15 SEL SSB IN(L) → TO SHT7 IC234 PIN 16
Q6 → 16 SEL LOOK/LISTEN (L) → IC54(e) 74HC04 → TO SHT 3 IC 8 PIN 2 & SHT 5 R101 ; TO SHT 5 R100 & SHT 7 IC214 PIN 9
Q7 → 19 PWR HD (H) → TO SHT 9 R69

IC58 74HC377 — +5V(S), Vcc pin 20, GND pin 10, EN pin 1, CK pin 11 ← D7 BUF WR(L)
D0–D7 ← 8-BIT DATA BUS D0–D7
Q0 → 2 D8 ; Q1 → 5 D9 ; Q2 → 6 D10 ; Q3 → 9 D11 → D8–D11 BUS 4 → TO SHT 3 IC 15 & 16 PIN 7 PIN 6 ; TO SHT 4 IC 20, 25, 27 PIN 5 PIN 4
Q4 → 12 SEL AF2 (4VFS) (L) → TO SHT 3 IC 13 PIN 8
Q5 → 15 SEL AF2 (L) → TO SHT 3 IC 13 PIN 9
Q6 → 16 SEL AF1 (4VFS) (L) → TO SHT 3 IC 13 PIN 16
Q7 → 19 SEL AF1 (L) → TO SHT 3 IC 13 PIN 1

8-BIT DATA BUS
TO SHEET 3
IC 1, 2, 15, 16
TO SHEET 4
IC 20, 25, 27, 28
TO SHEET 6
IC 252, 254, 256, 253, 255, 257
TO SHEET 9
IC 301

SUPPLY LINE TABLE			
IC	PIN	DEC	CAP
50	20	C15	10n
52	16	C16	10n
53	16	C17	10n
54	14	C18	10n
56	20	C19	10n
58	20	C20	10n

ALL IC'S DECOUPLED AT SUPPLY TO GROUND AS INDICATED

CONTINUED FROM SHEET ONE

CONTINUED TO SHEET THREE

■ REPEATED FOR CIRCUIT CLARITY

Drg. No. Z44830/180 Sheet 2 of 9 Issue 1

Fig. 7-44 B1/2 Audio processor

Audio processor **B1/2**

Circuit diagram B1/2

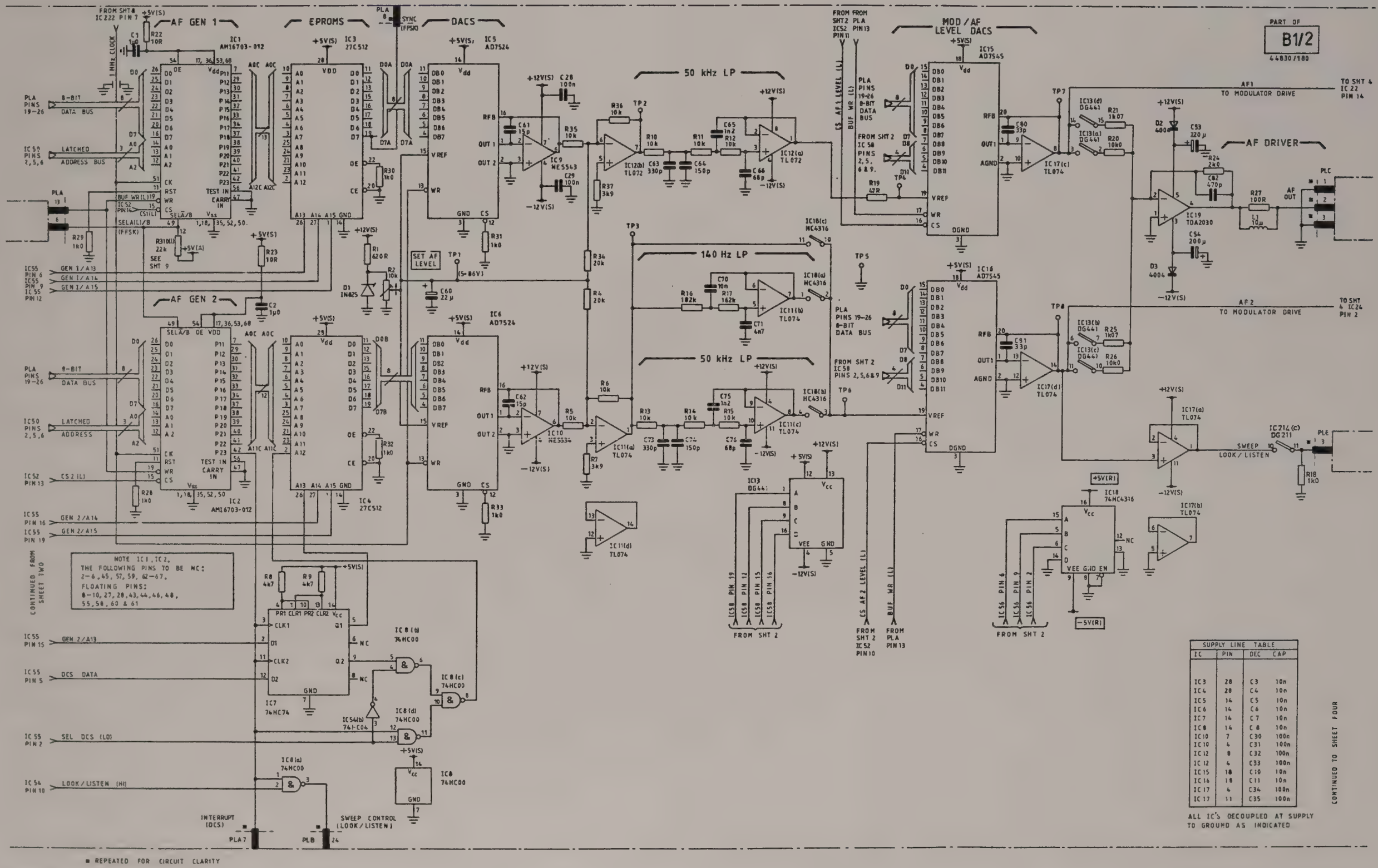

Drg. No. Z44830/180 Sheet 3 of 9 Issue 1

Fig. 7-45 B1/2 Audio processor

Audio processor **B1/2**

Circuit diagram B1/2

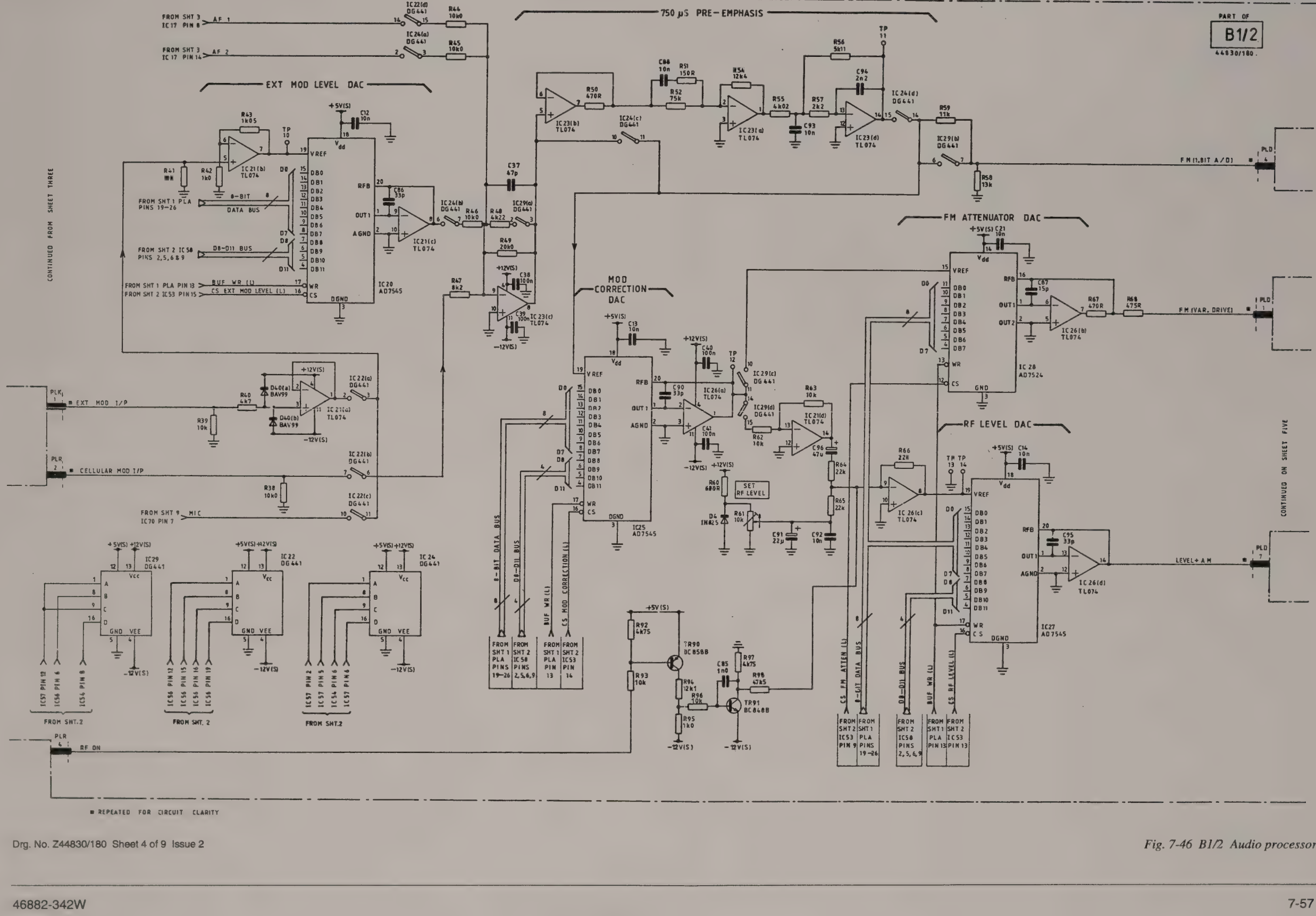

Drg. No. Z44830/180 Sheet 4 of 9 Issue 2

Fig. 7-46 B1/2 Audio processor

Audio processor **B1/2**

Circuit diagram B1/2

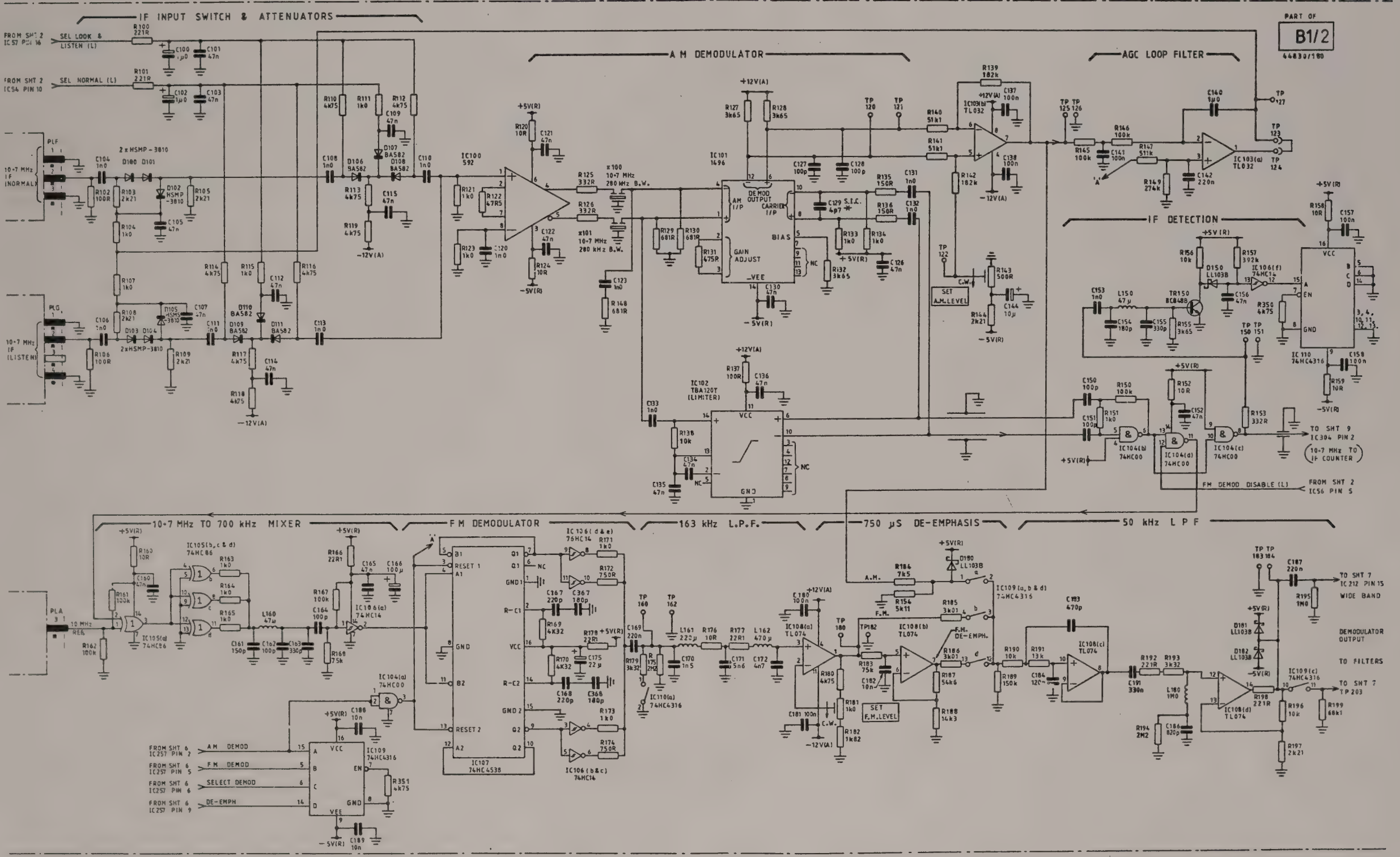

Drg. No. Z44830/180 Sheet 5 of 9 Issue 4

Fig. 7-47 B1/2 Audio processor

Audio processor **B1/2**

Circuit diagram B1/2

PART OF
B1/2
44830/180

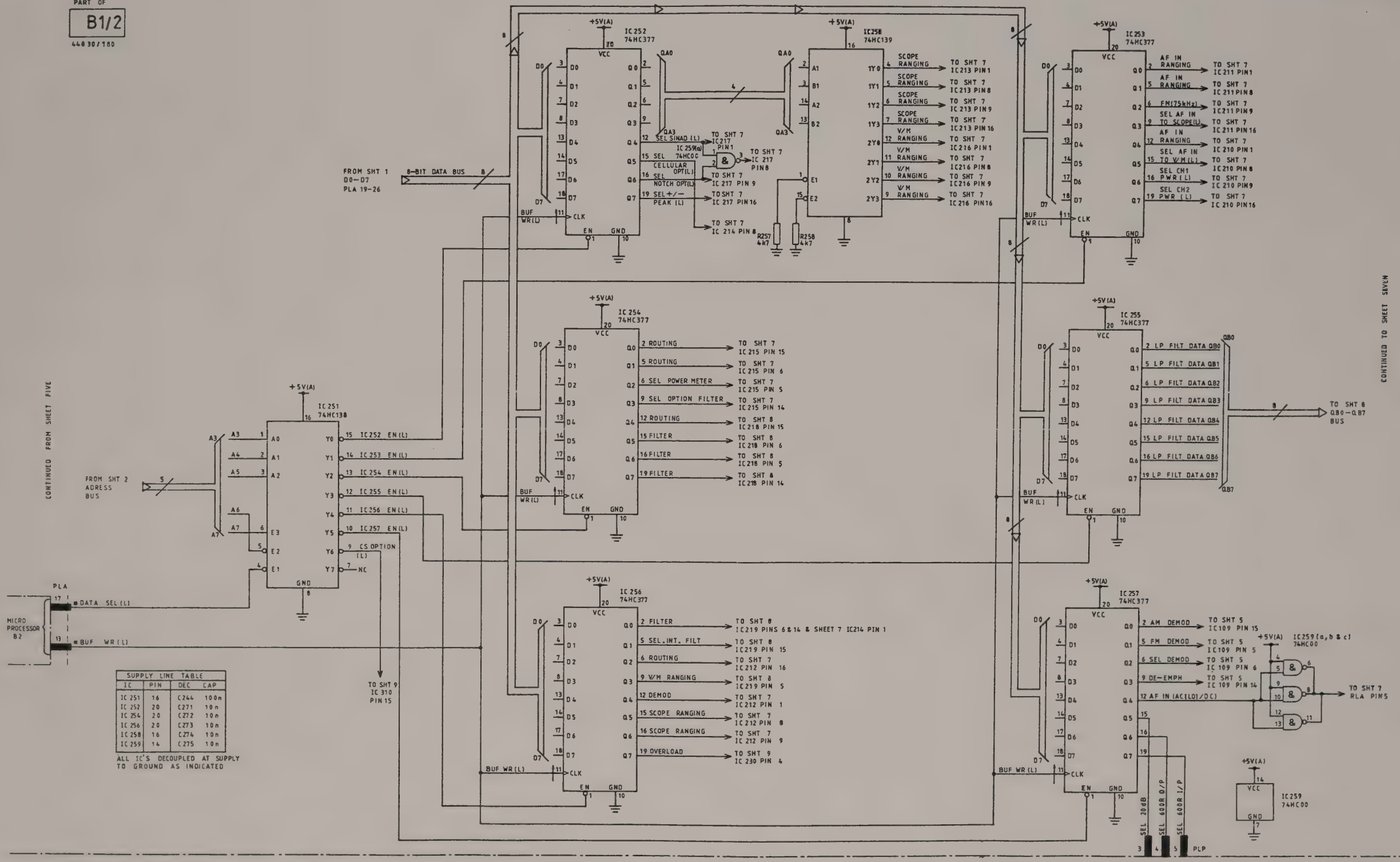

SUPPLY LINE TABLE			
IC	PIN	DEC	CAP
IC 251	16	C244	100n
IC 252	20	C271	10n
IC 254	20	C272	10n
IC 256	20	C273	10n
IC 258	16	C274	10n
IC 259	14	C275	10n

ALL IC'S DECOUPLED AT SUPPLY TO GROUND AS INDICATED

■ REPEATED FOR CIRCUIT CLARITY

Drg. No. Z44830/180 Sheet 6 of 9 Issue 1

Fig. 7-48 B1/2 Audio processor

Audio processor **B1/2**

Circuit diagram B1/2

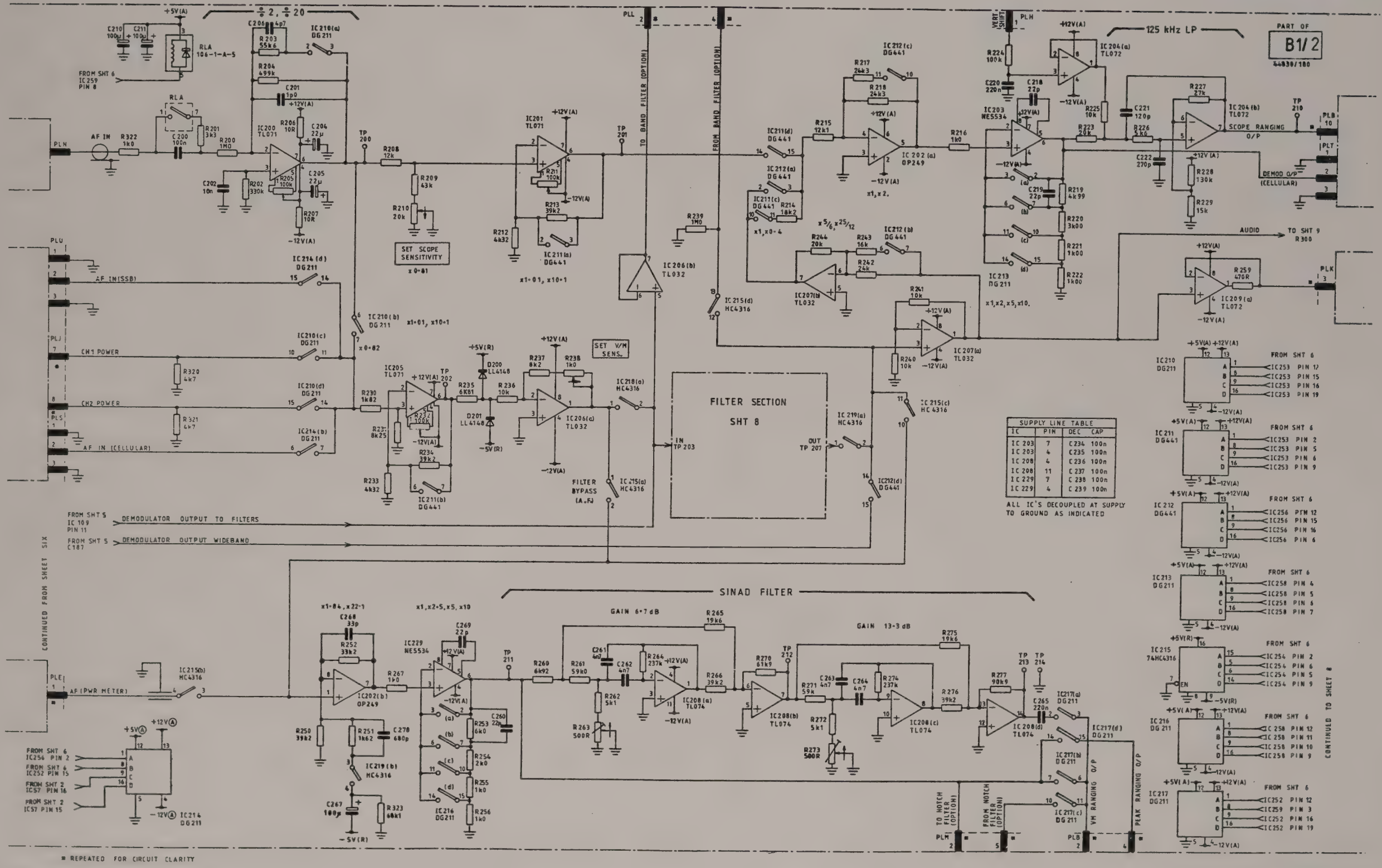

SUPPLY LINE TABLE		
IC	PIN	DEC CAP
IC 203	7	C234 100n
IC 203	4	C235 100n
IC 208	4	C236 100n
IC 208	11	C237 100n
IC 229	7	C238 100n
IC 229	4	C239 100n

Drg. No. Z44830/180 Sheet 7 of 9 Issue 1

Fig. 7-49 B1/2 Audio processor

Audio processor **B1/2**

Circuit diagram B1/2

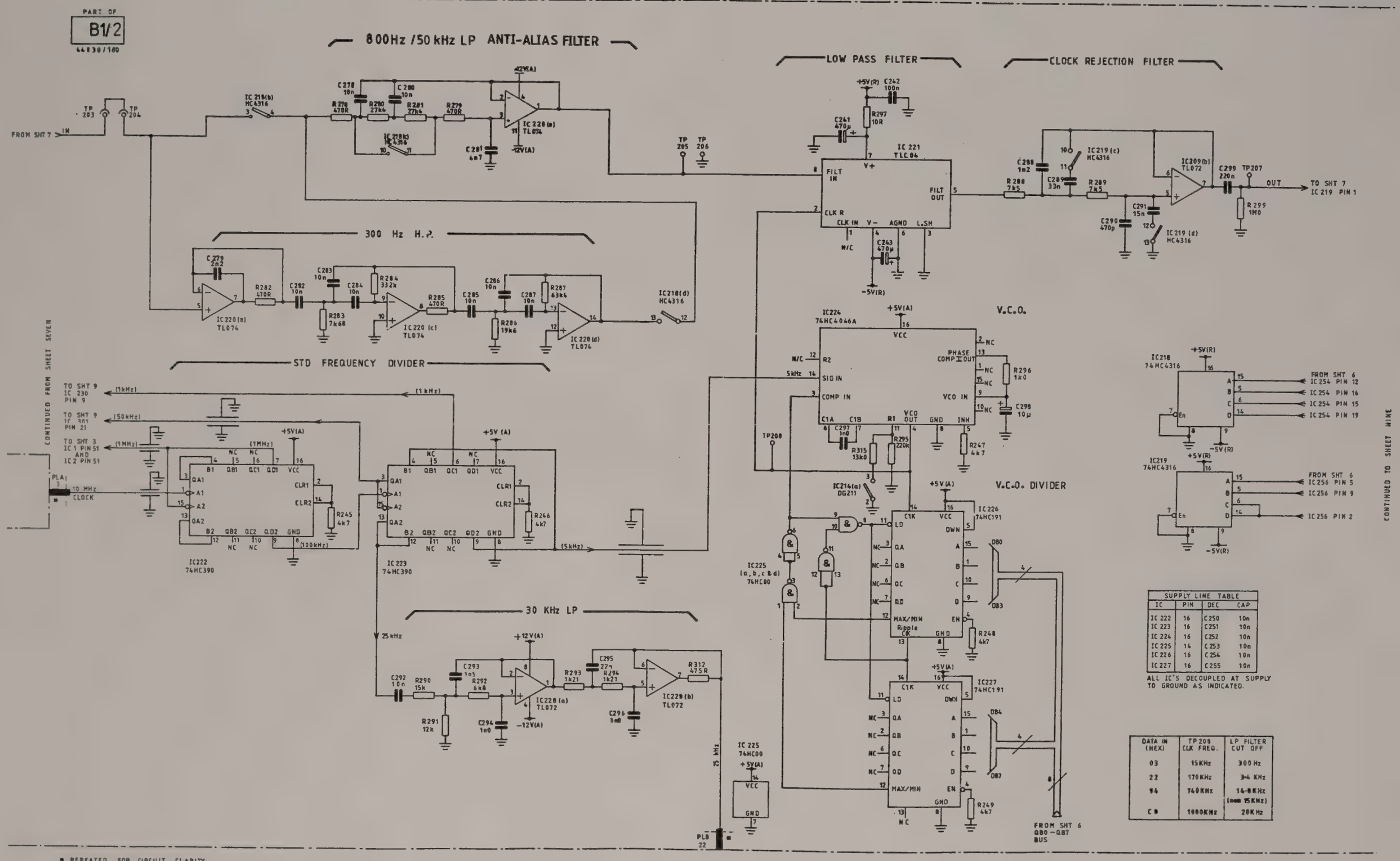

SUPPLY LINE TABLE			
IC	PIN	DEC	CAP
IC 222	16	C250	10n
IC 223	16	C251	10n
IC 224	16	C252	10n
IC 225	14	C253	10n
IC 226	16	C254	10n
IC 227	16	C255	10n

ALL IC'S DECOUPLED AT SUPPLY TO GROUND AS INDICATED.

DATA IN (HEX)	TP 208 CLK FREQ.	LP FILTER CUT OFF
03	15KHz	300 Hz
22	170KHz	3·4 KHz
94	740KHz	14·8KHz (nom 15KHz)
C8	1000KHz	20KHz

Drg. No. Z44830/180 Sheet 8 of 9 Issue 1

Fig. 7-50 B1/2 Audio processor

Audio processor **B1/2**

Circuit diagram B1/2

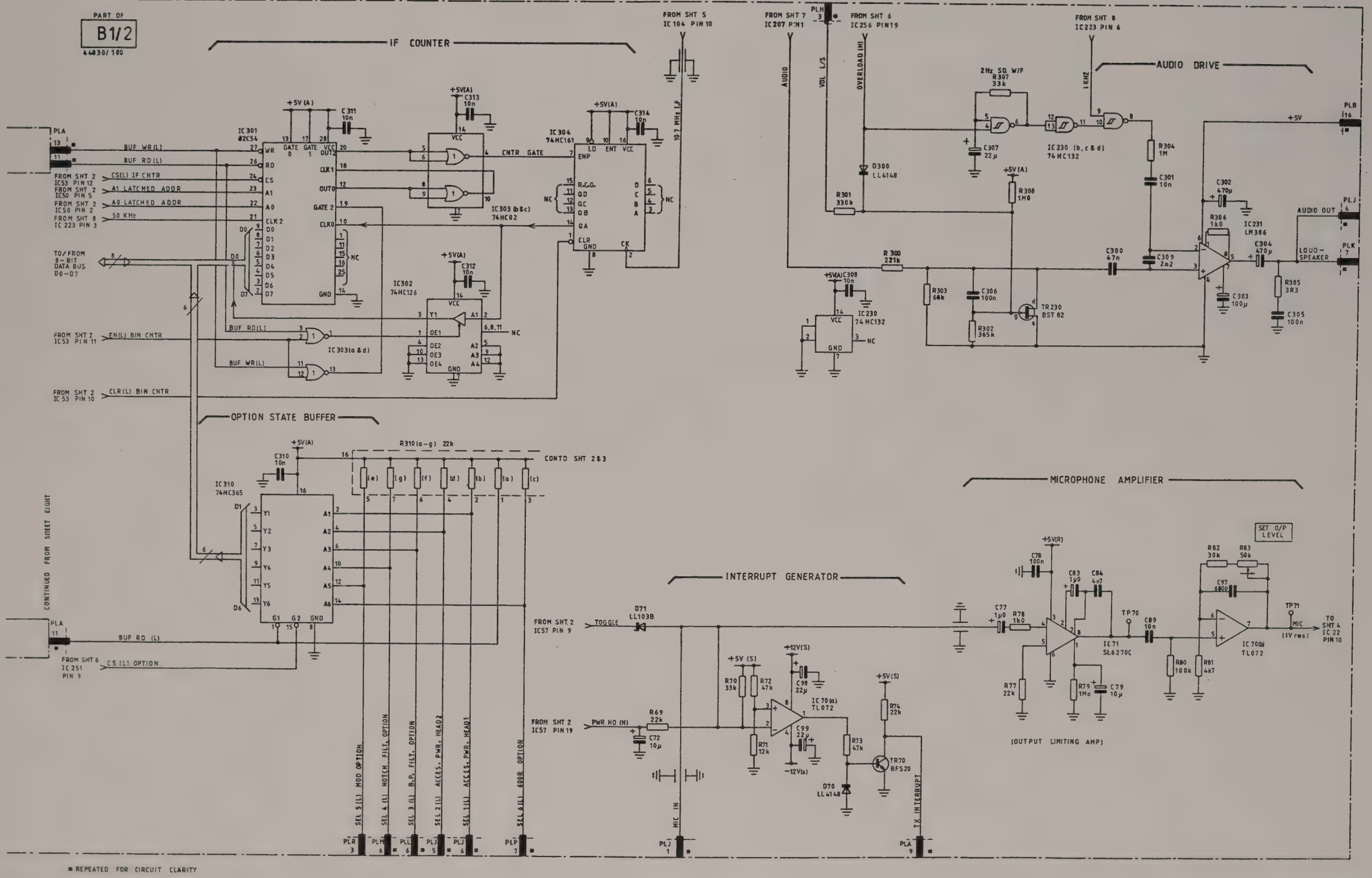

Drg. No. Z44830/180 Sheet 9 of 9 Issue 1

Fig. 7-51 B1/2 Audio processor

B2/1

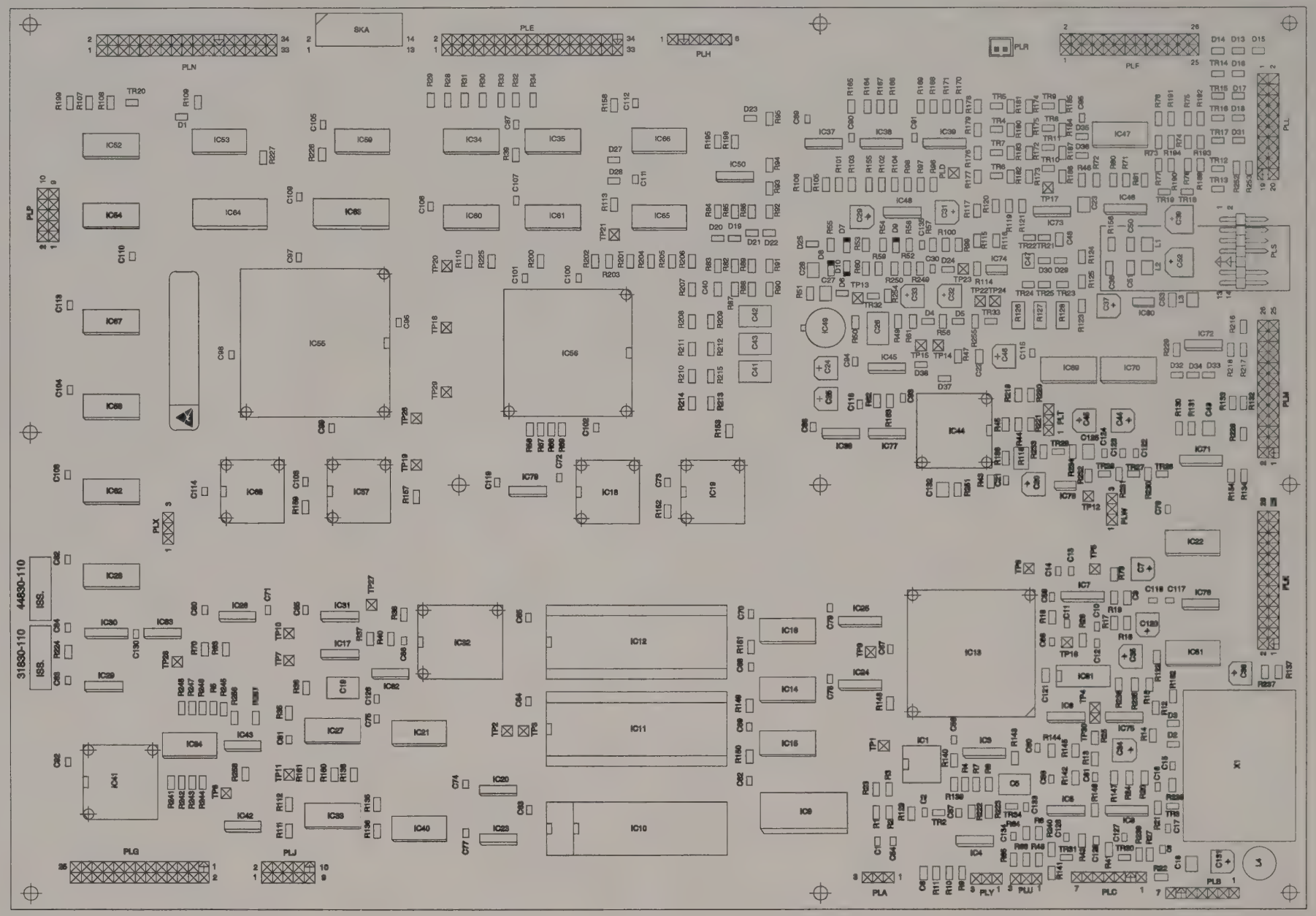

Audio processor B1/2

Drg. No. E44830/110 Issue 2

Fig. 7-52 B2/1 Component layout of microprocessor board

Circuit diagram B2/1

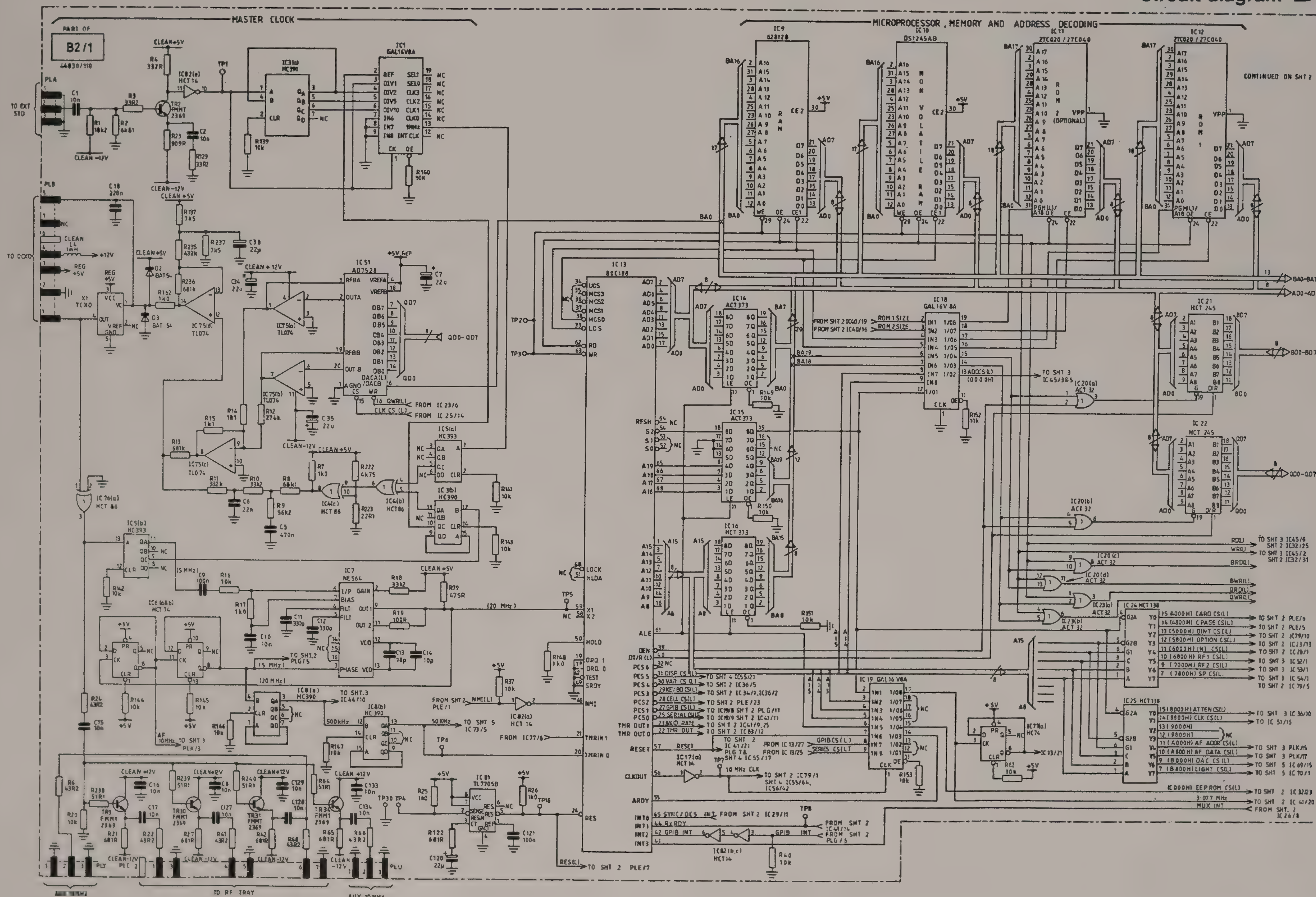

Drg. No. Z448230/110 Sheet 1 of 5 Issue 1

Fig. 7-53 B2/1 Microprocessor

Microprocessor **B2/1**

Circuit diagram B2/1

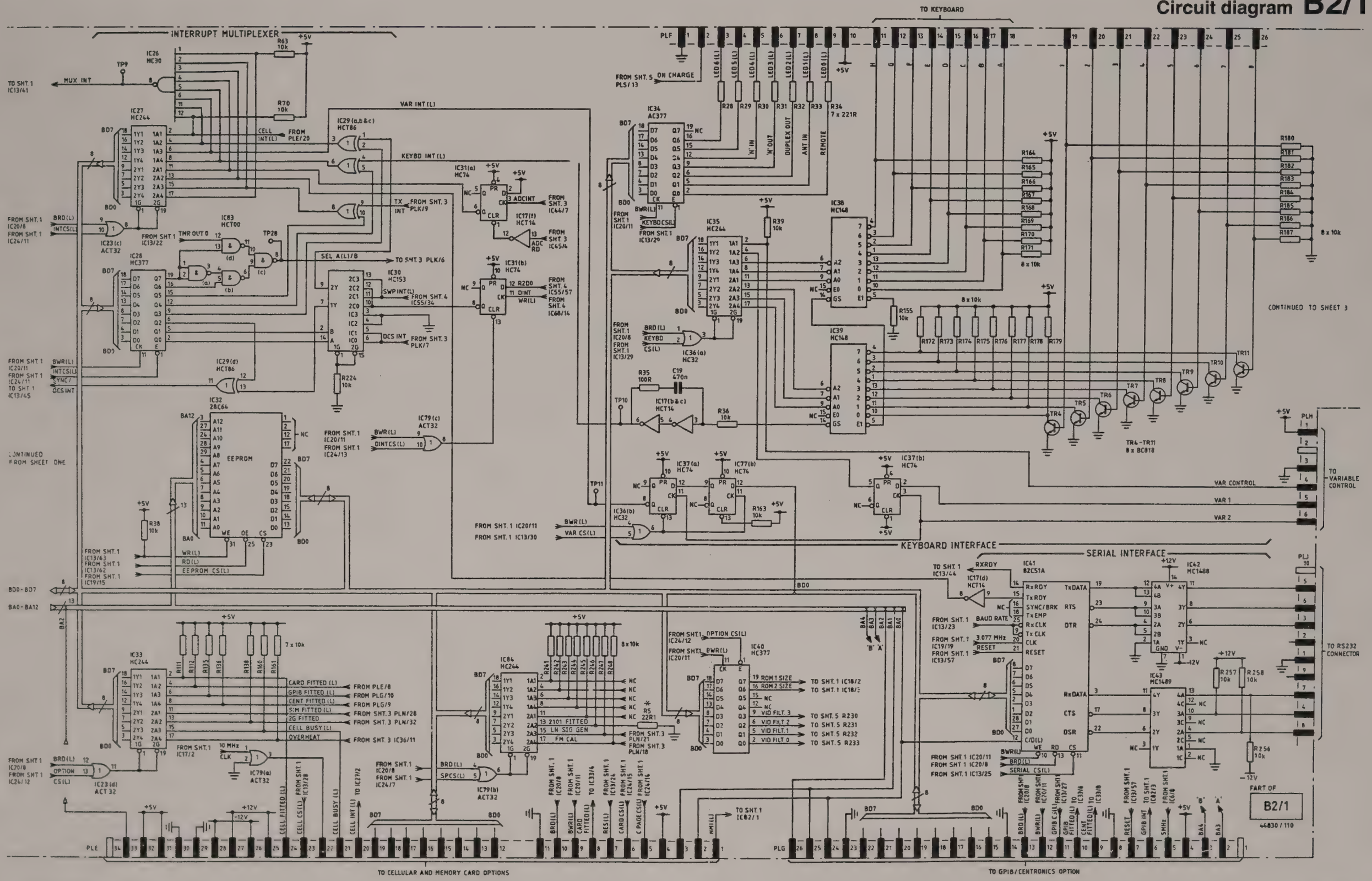

Drg. No. Z44830/110 Sheet 2 of 5 Issue 1

Fig. 7-54 B2/1 Microprocessor

Microprocessor **B2/1**

Circuit diagram B2/1

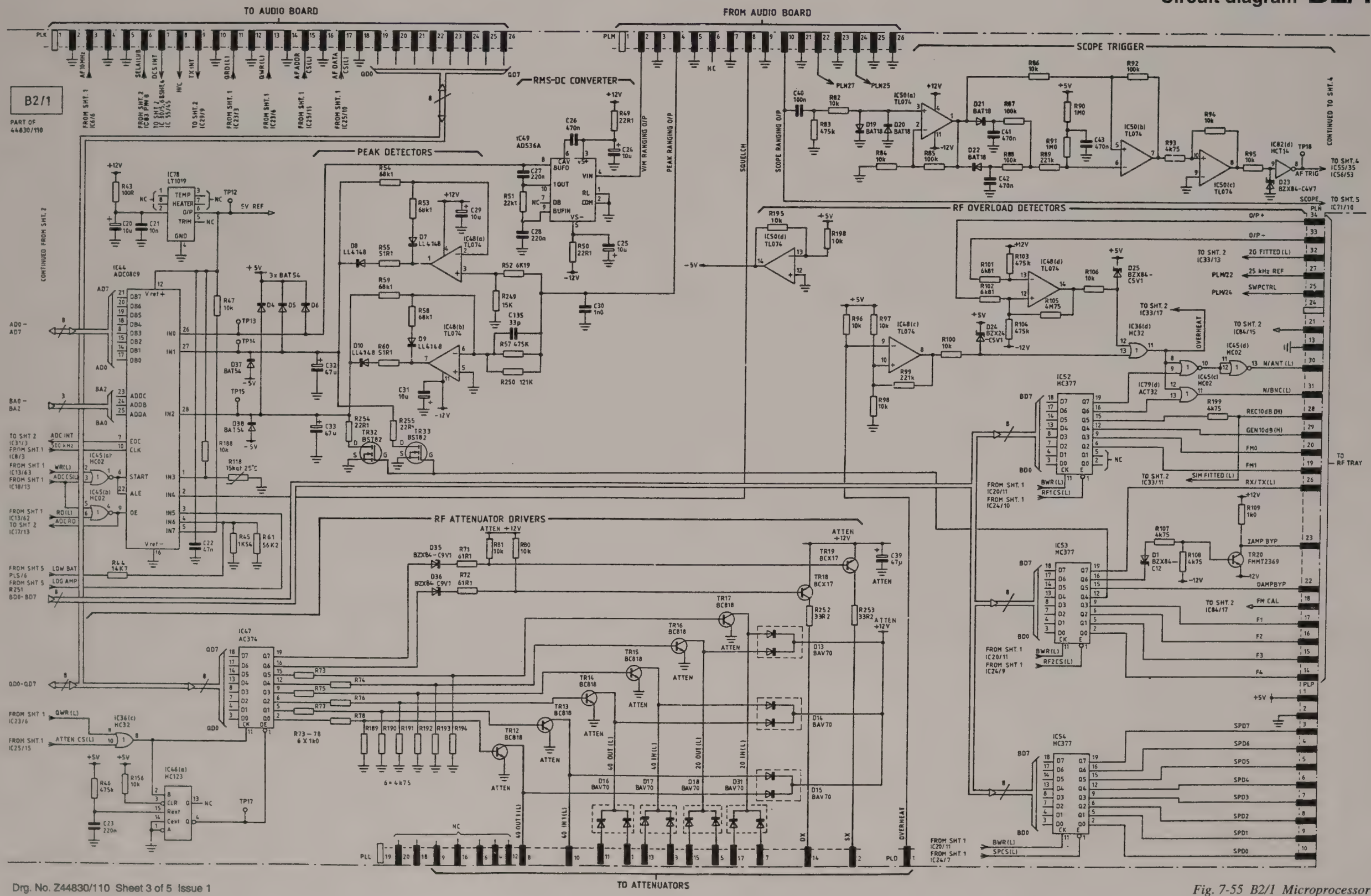

Drg. No. Z44830/110 Sheet 3 of 5 Issue 1

Fig. 7-55 B2/1 Microprocessor

Microprocessor **B2/1**

Circuit diagram B2/1

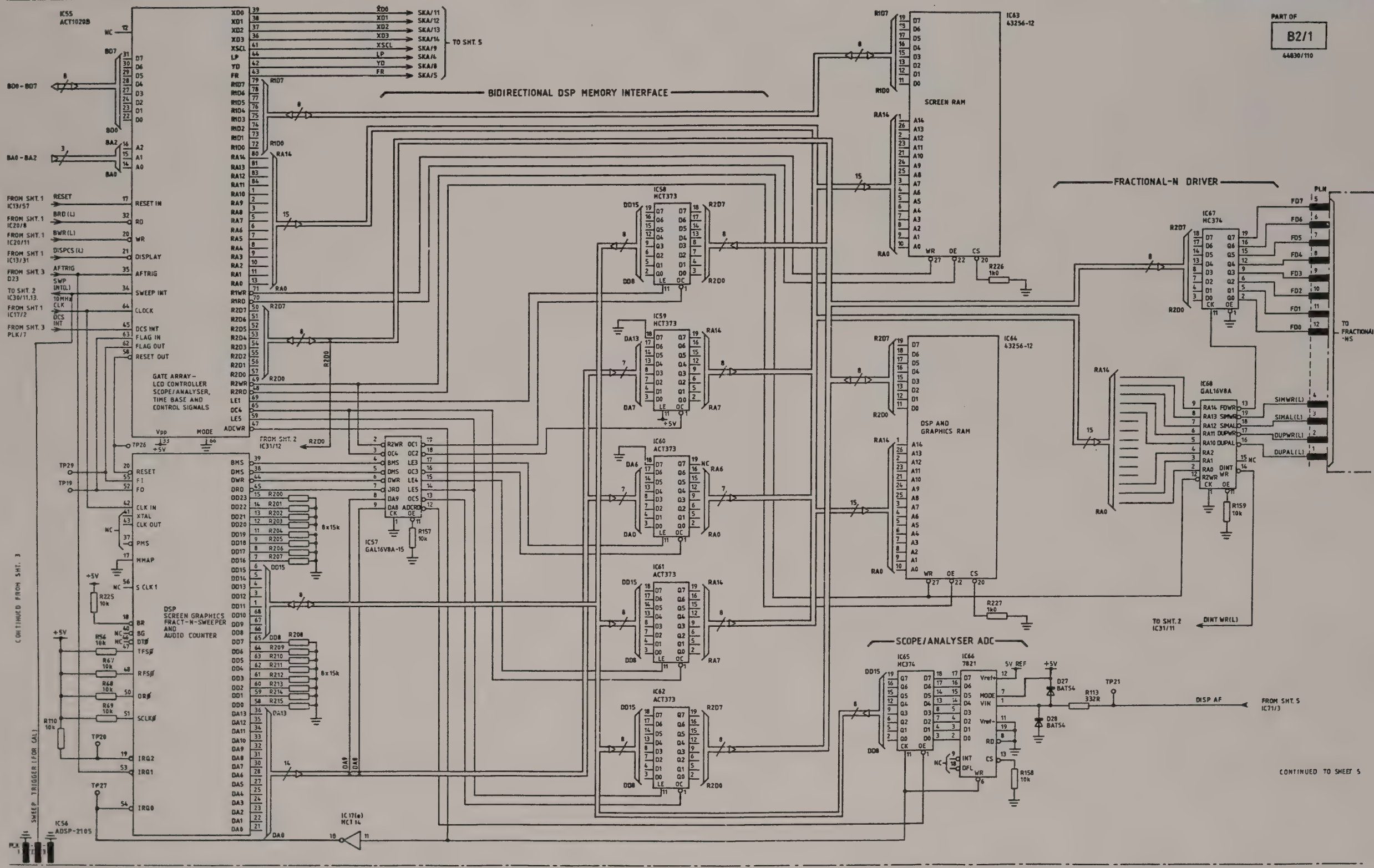

Drg. No. Z44830/110 Sheet 4 of 5 Issue 2

Fig. 7-56 B2/1 Microprocessor

Microprocessor **B2/1**

Circuit diagram B2/1

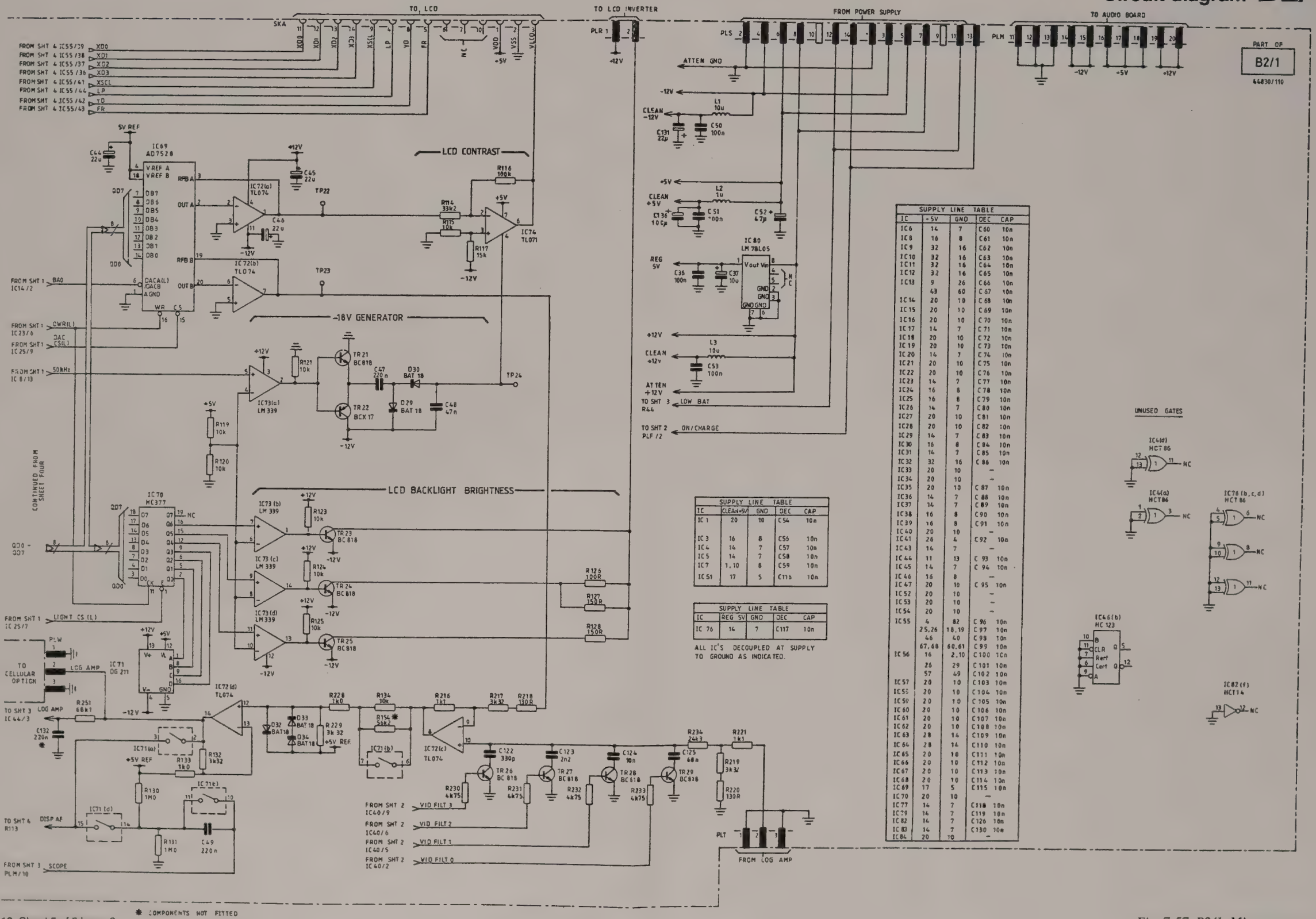

SUPPLY LINE TABLE				
IC	+5V	GND	DEC	CAP
IC6	14	7	C60	10n
IC8	16	8	C61	10n
IC9	32	16	C62	10n
IC10	32	16	C63	10n
IC11	32	16	C64	10n
IC12	32	16	C65	10n
IC13	9	26	C66	10n
	43	60	C67	10n
IC14	20	10	C68	10n
IC15	20	10	C69	10n
IC16	20	10	C70	10n
IC17	14	7	C71	10n
IC18	20	10	C72	10n
IC19	20	10	C73	10n
IC20	14	7	C74	10n
IC21	20	10	C75	10n
IC22	20	10	C76	10n
IC23	14	7	C77	10n
IC24	16	8	C78	10n
IC25	16	8	C79	10n
IC26	14	7	C80	10n
IC27	20	10	C81	10n
IC28	20	10	C82	10n
IC29	14	7	C83	10n
IC30	16	8	C84	10n
IC31	14	7	C85	10n
IC32	32	16	C86	10n
IC33	20	10	–	
IC34	20	10	–	
IC35	20	10	C87	10n
IC36	14	7	C88	10n
IC37	14	7	C89	10n
IC38	16	8	C90	10n
IC39	16	8	C91	10n
IC40	20	10	–	
IC41	26	4	C92	10n
IC43	14	7	–	
IC44	11	13	C93	10n
IC45	14	7	C94	10n
IC46	16	8	–	
IC47	20	10	C95	10n
IC52	20	10	–	
IC53	20	10	–	
IC54	20	10	–	
IC55	4	82	C96	10n
	25,26	18,19	C97	10n
	46	40	C98	10n
	67,68	60,61	C99	10n
IC56	16	2,10	C100	10n
	26	29	C101	10n
	57	49	C102	10n
IC57	20	10	C103	10n
IC58	20	10	C104	10n
IC59	20	10	C105	10n
IC60	20	10	C106	10n
IC61	20	10	C107	10n
IC62	20	10	C108	10n
IC63	28	14	C109	10n
IC64	28	14	C110	10n
IC65	20	10	C111	10n
IC66	20	10	C112	10n
IC67	20	10	C113	10n
IC68	20	10	C114	10n
IC69	17	5	C115	10n
IC70	20	10	–	
IC77	14	7	C118	10n
IC79	14	7	C119	10n
IC82	14	7	C126	10n
IC83	14	7	C130	10n
IC84	20	10	–	

SUPPLY LINE TABLE				
IC	CLEAN+5V	GND	DEC	CAP
IC 1	20	10	C54	10n
IC 3	16	8	C55	10n
IC 4	14	7	C57	10n
IC 5	14	7	C58	10n
IC 7	1, 10	8	C59	10n
IC 51	17	5	C116	10n

SUPPLY LINE TABLE				
IC	REG 5V	GND	DEC	CAP
IC 76	14	7	C117	10n

ALL IC'S DECOUPLED AT SUPPLY TO GROUND AS INDICATED.

Drg. No. Z44830/110 Sheet 5 of 5 Issue 2

Fig. 7-57 B2/1 Microprocessor

B3/1

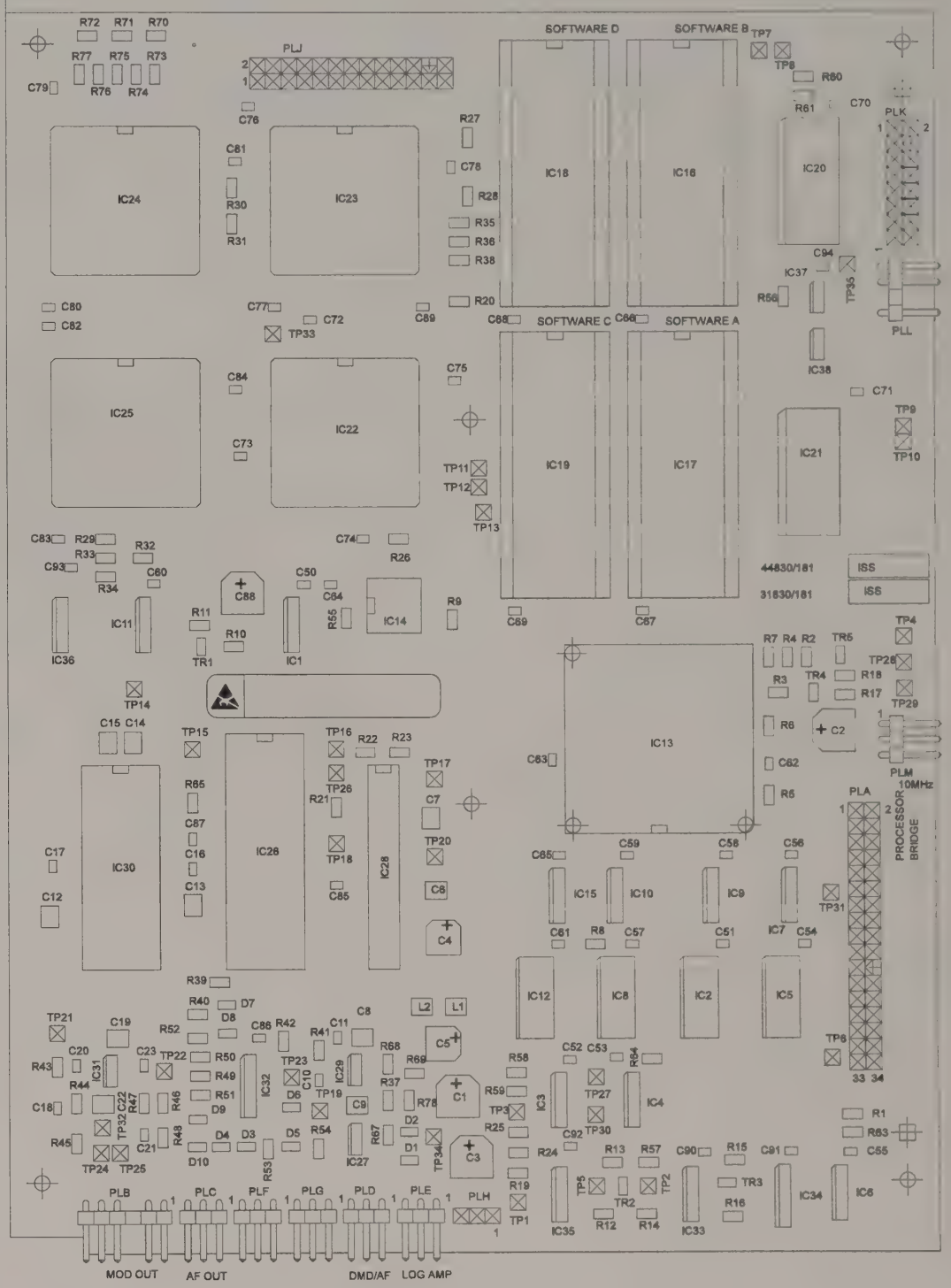

Microprocessor **B2/1**

Drg. No. E44829/181

Fig. 7-58 B3/1 Component layout of cellular radio systems board

Circuit diagram B3/1

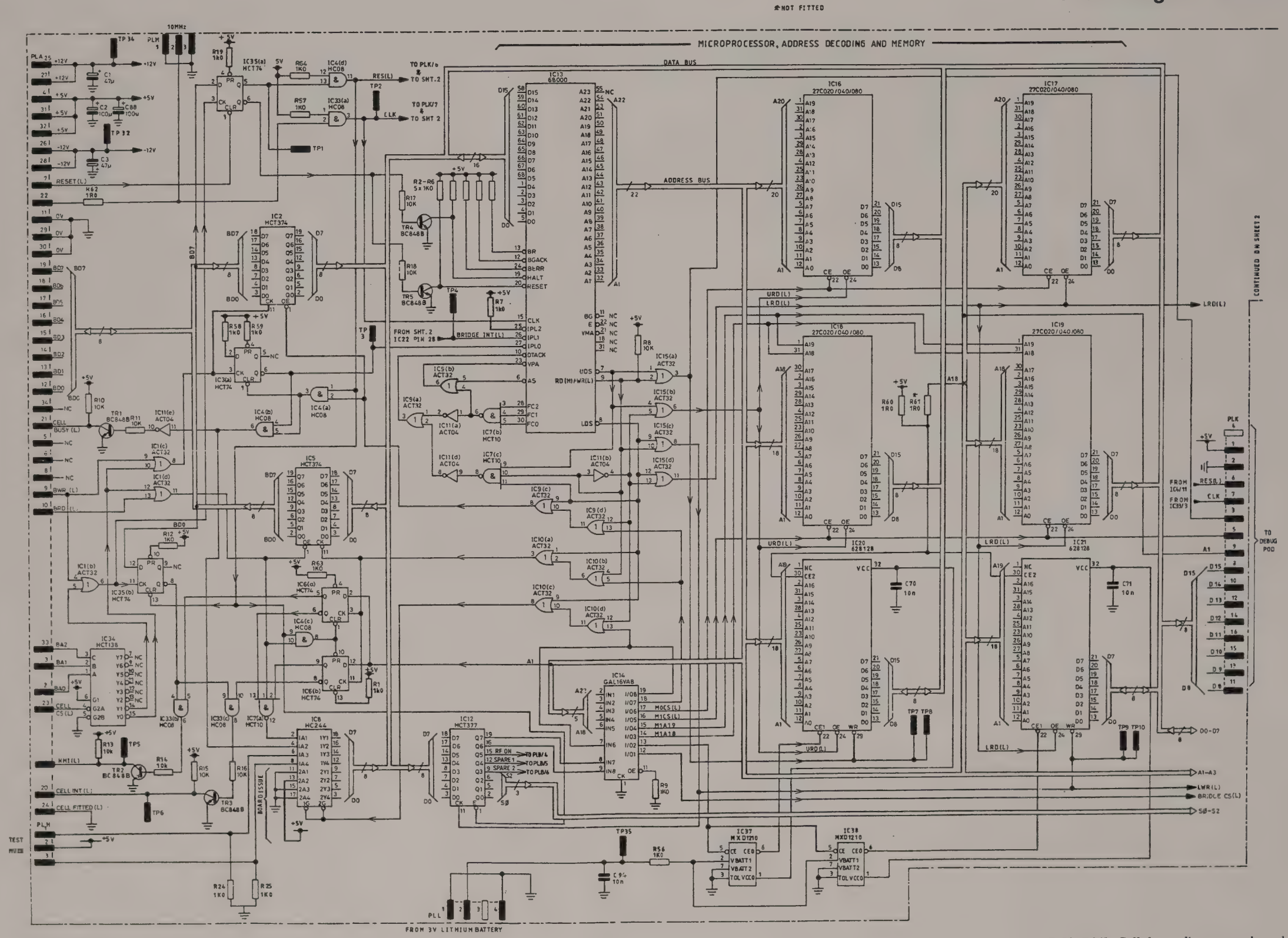

Drg. No. Z44830/181 Sheet 1 of 3 Issue 2

Fig. 7-59 B3/1 Cellular radio systems board

Cellular radio systems board **B3/1**

Circuit diagram B3/1

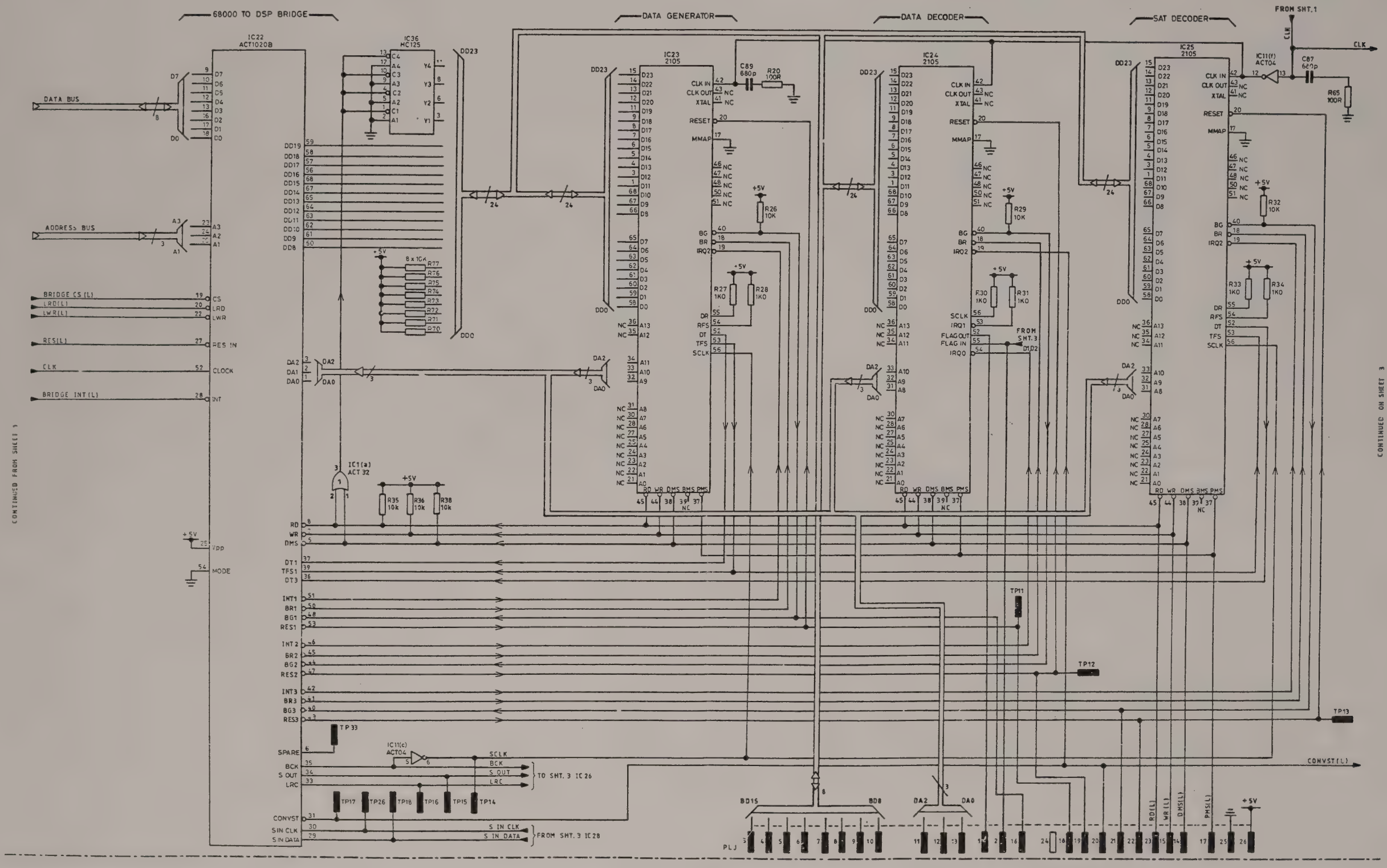

Drg. No. Z44830/181 Sheet 2 of 3 Issue 1

Fig. 7-60 B3/1 Cellular radio systems board

Cellular radio systems board **B3/1**

Circuit diagram B3/1

SUPPLY LINE TABLE			
IC	+5V	GND	CAP
1	14	7	C50 10n
2	20	10	C51 10n
3	14	7	C52 10n
4	14	7	C53 10n
5	20	10	C54 10n
6	14	7	C55 10n
7	14	7	C56 10n
8	20	10	C57 10n
9	14	7	C58 10n
10	14	7	C59 10n
11	14	7	C60 10n
12	20	10	C61 10n
13	14	16,17	C62 10n
	52	56,57	C63 10n
14	20	10	C64 10n
15	14	7	C65 10n
16	32	16	C66 10n
17	32	16	C67 10n
18	32	16	C68 10n
19	32	16	C69 10n
20	—	16	—
21	—	16	—

SUPPLY LINE TABLE			
IC	5V	GND	CAP
22	4	66	C72 10n
	21	14,15	C73 10n
	38	32	C74 10n
	55	49	C75 10n
23	16	2,10	C76 10n
	26	29	C77 10n
	57	49	C78 10n
24	16	2,10	C79 10n
	26	29	C80 10n
	57	49	C81 10n
25	16	2,10	C82 10n
	26	29	C83 10n
	57	49	C84 10n
26	22	8,21	C85 10n
32	16	8	C86 10n
33	14	7	C90 10n
34	16	8	C91 10n
35	14	7	C92 10n
36	14	7	C93 10n
37	8	4	—
38	8	4	—

Drg. No. Z44830/181 Sheet 3 of 3 Issue 1

Fig. 7-61 B3/1 Cellular radio systems board

B4

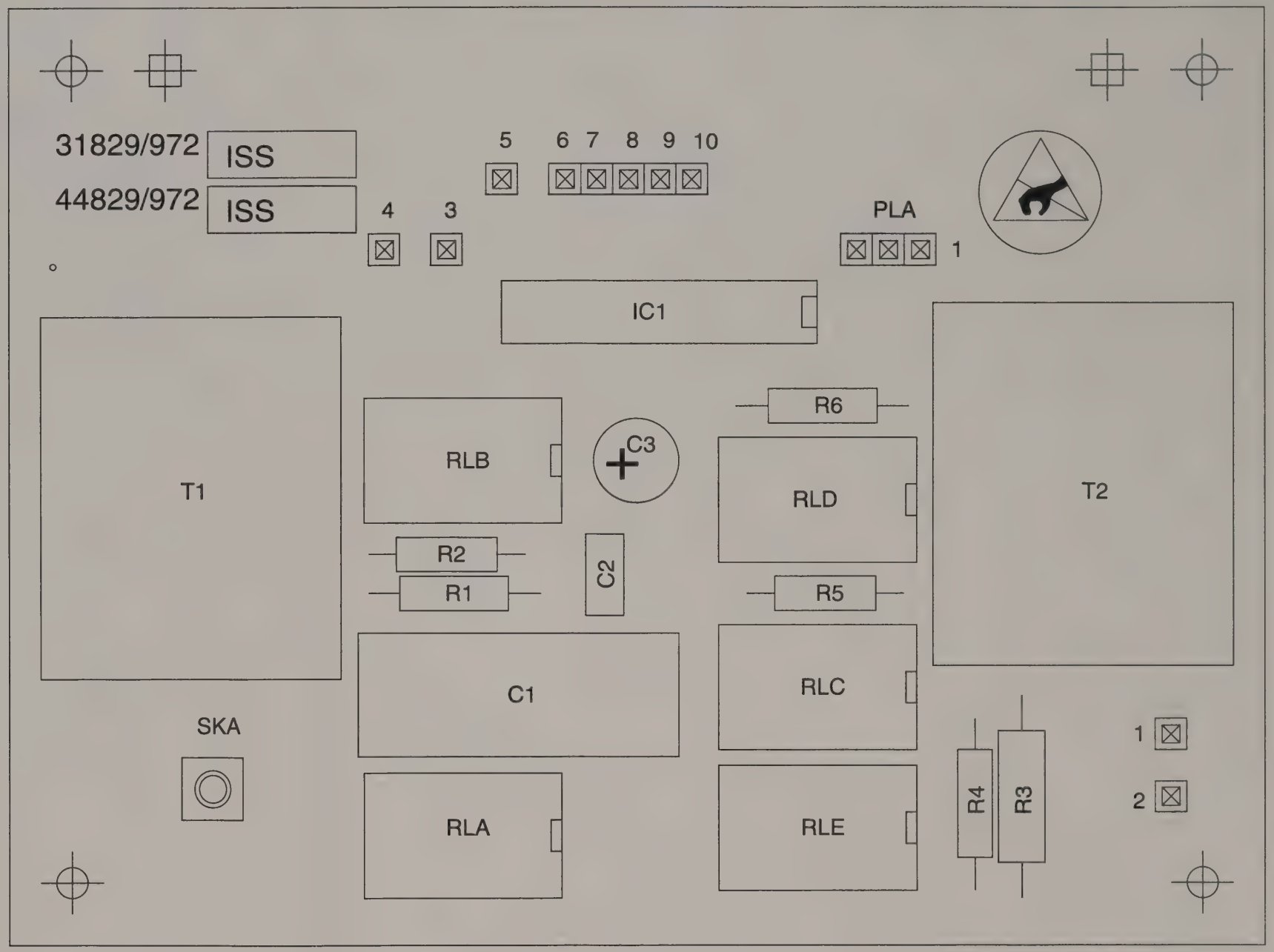

Cellular radio systems board **B3/1**

Drg. No. E44829/972 Issue 2

Fig. 7-62 B4 Component layout of 600 Ω audio input/output interface

Circuit diagram B4

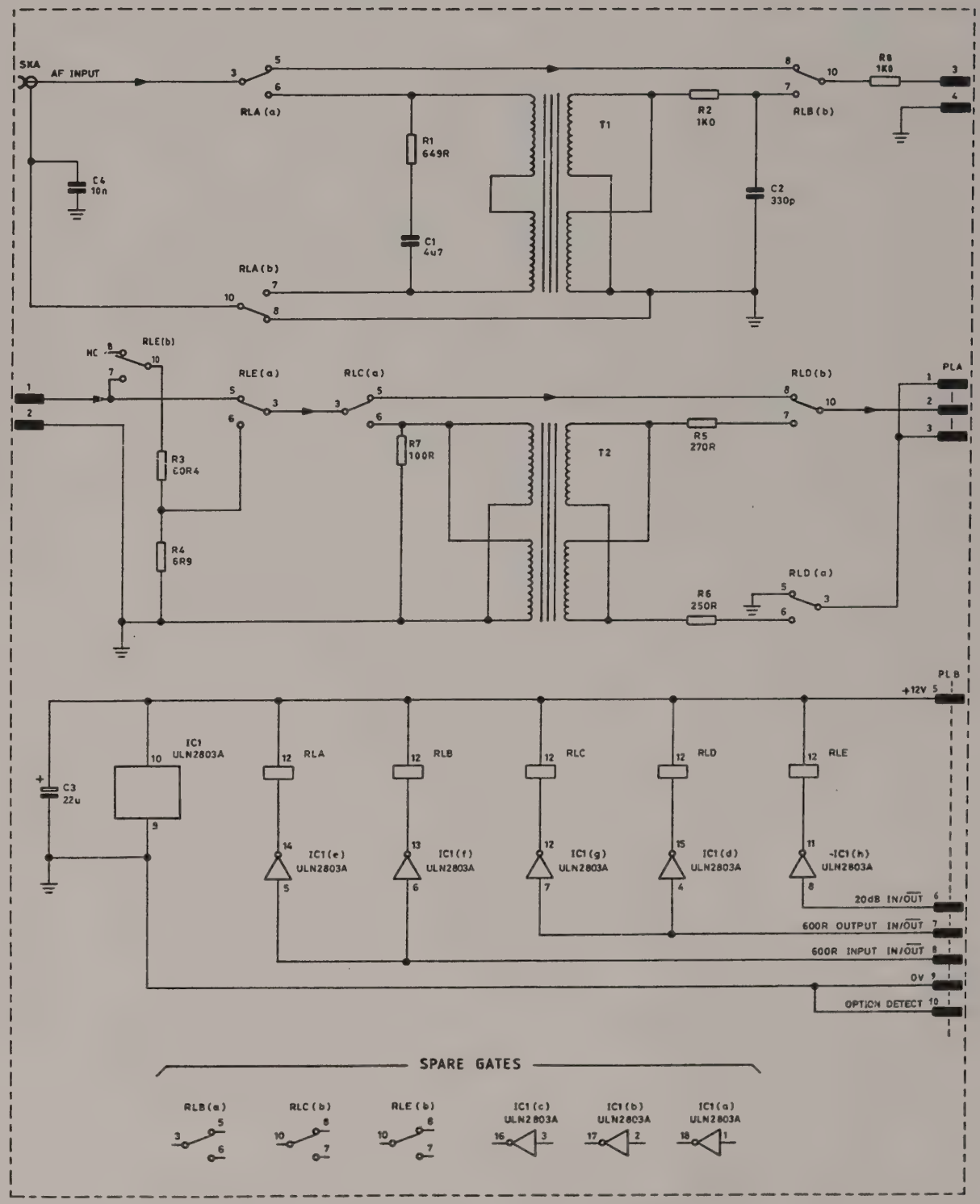

Drg. No. Z44829/972 Sheet 1 of 1 Issue 3

Fig. 7-63 B4 600 Ω audio input/output interface

B7

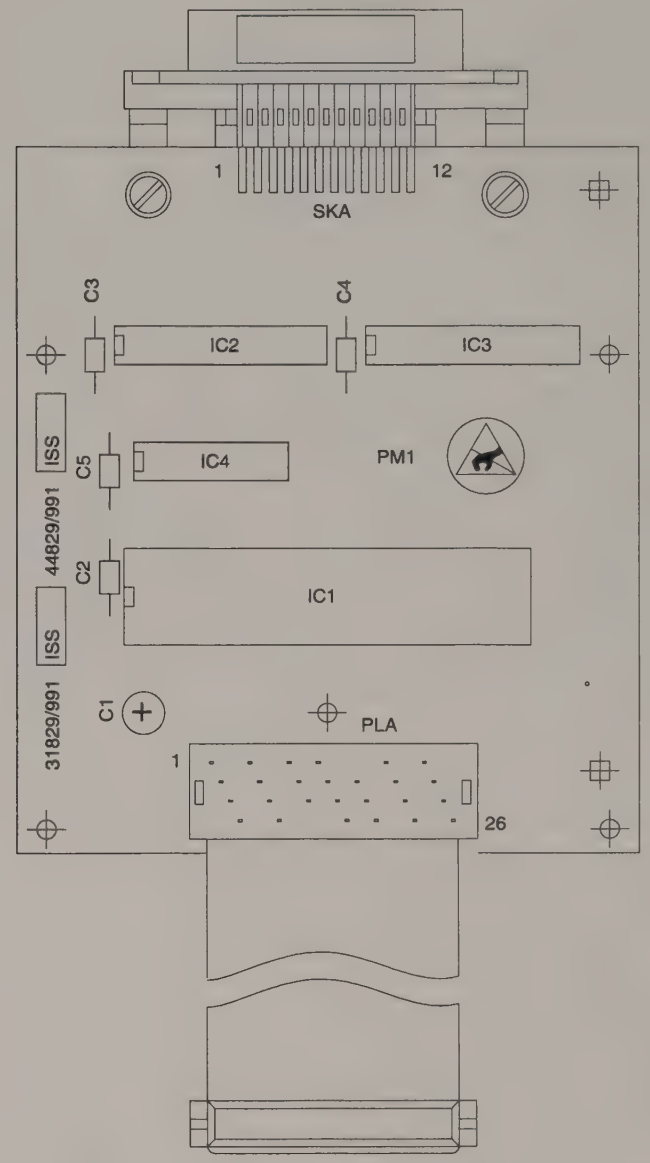

600 Ω audio input/output interface **B4**

Drg. No. E44829/991

Fig. 7-64 B7 Component layout of GPIB interface

Circuit diagram B7

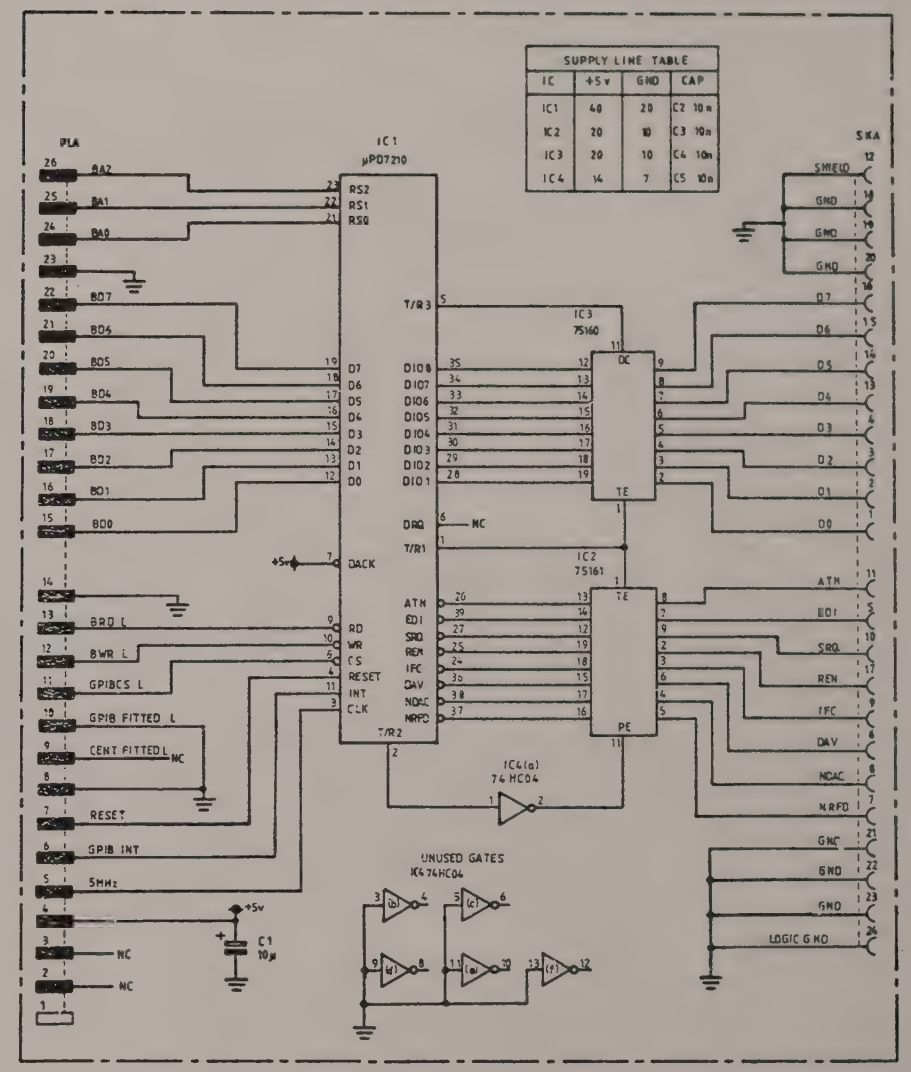

Drg. No. Z44829/991 Sheet 1 of 1 Issue 1

Fig. 7-65 B7 GPIB interface

B10

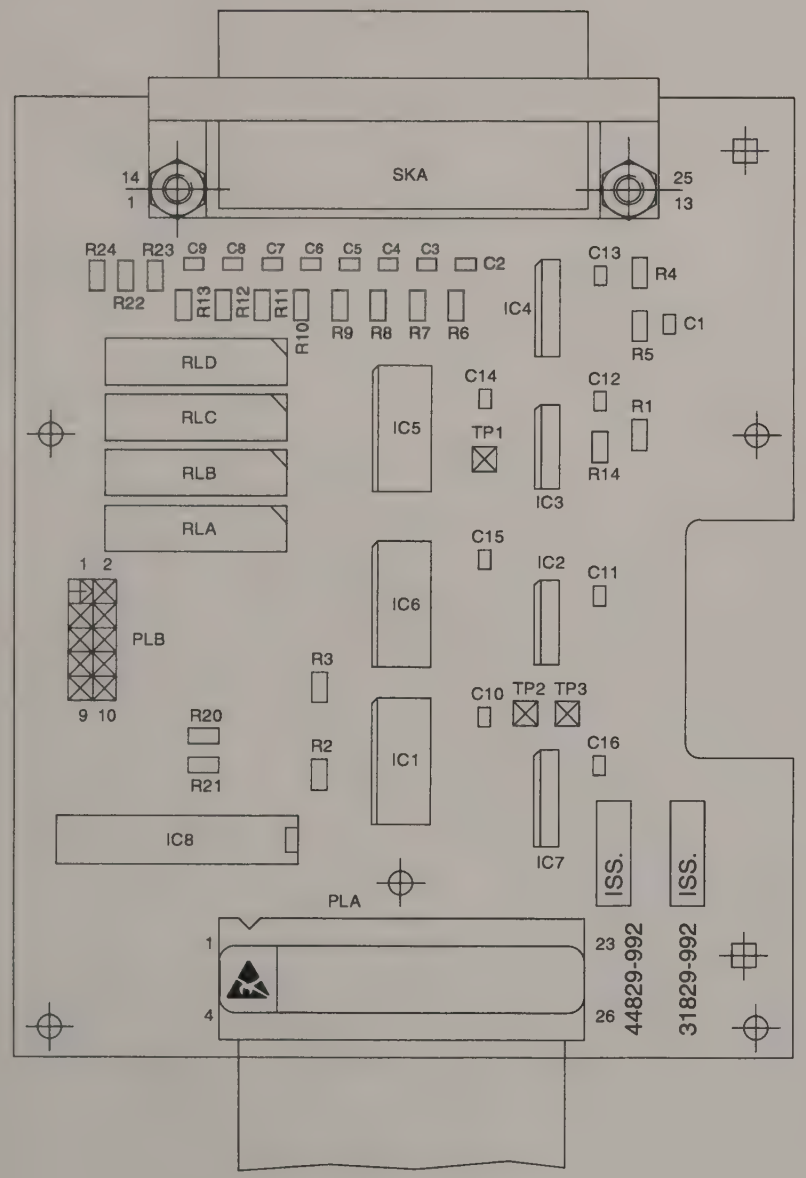

TOP SIDE

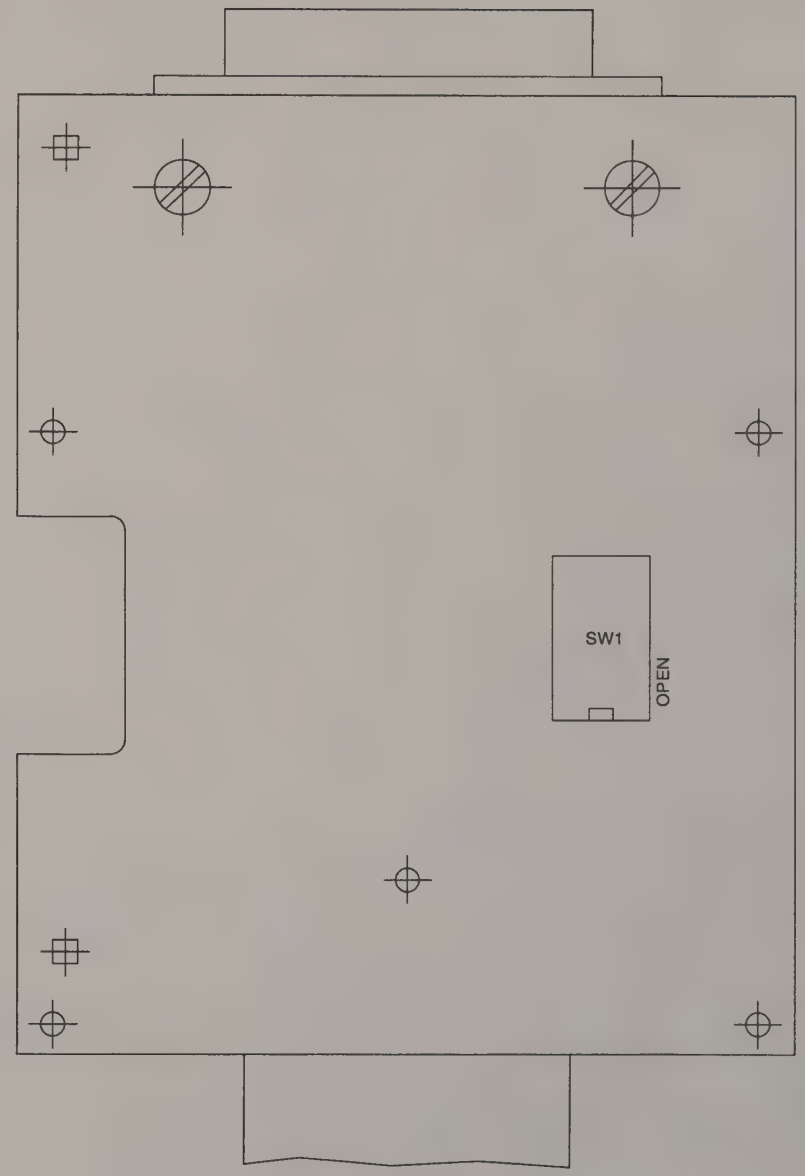

UNDER SIDE

GPIB interface B7

Drg. No. E44829/992 Issue 6

Fig. 7-66 B10 Component layout of parallel interface

Circuit diagram B10

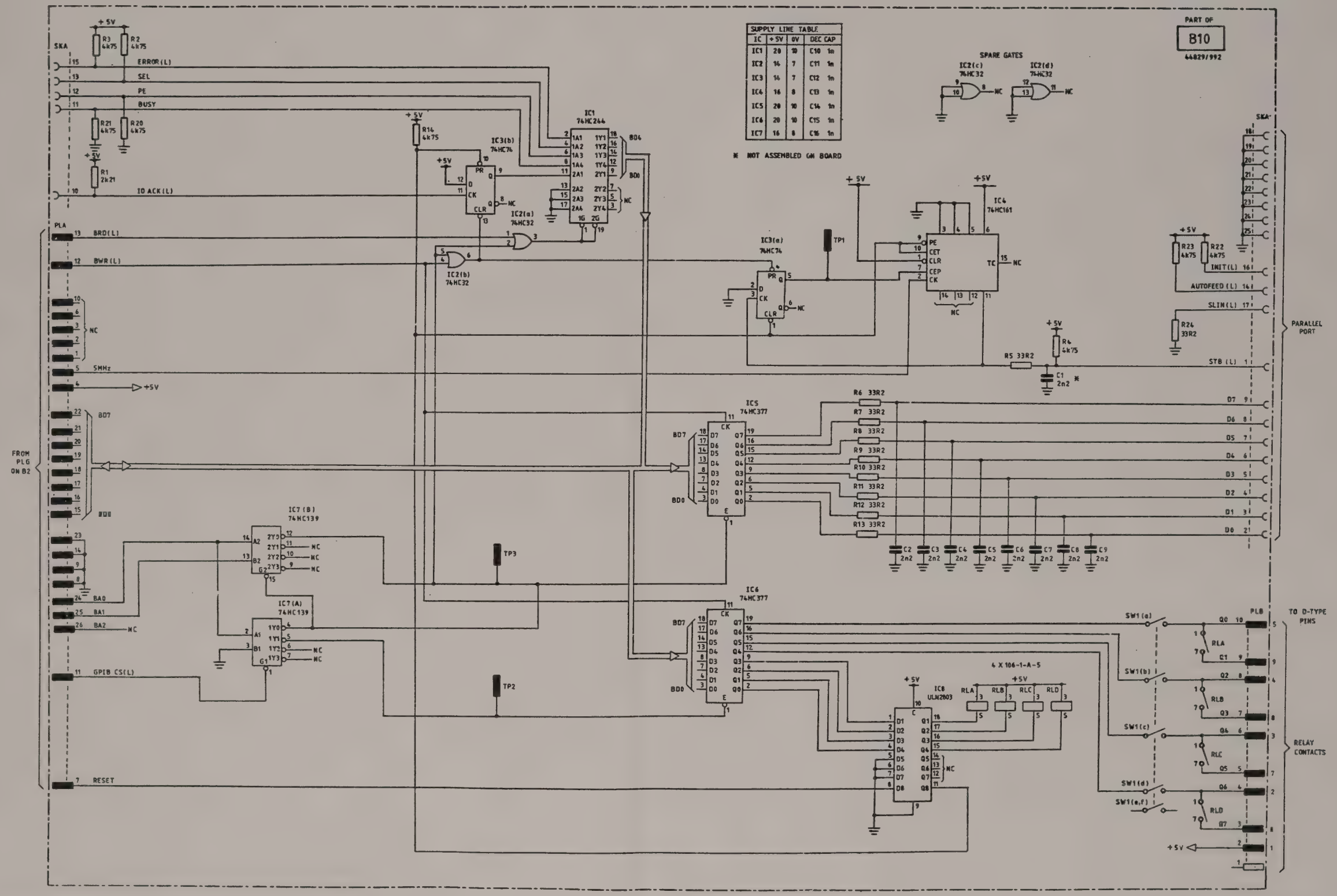

Drg. No. Z44829/992 Sheet 1 of 1 Issue 4

Fig. 7-67 B10 Parallel interface

B11

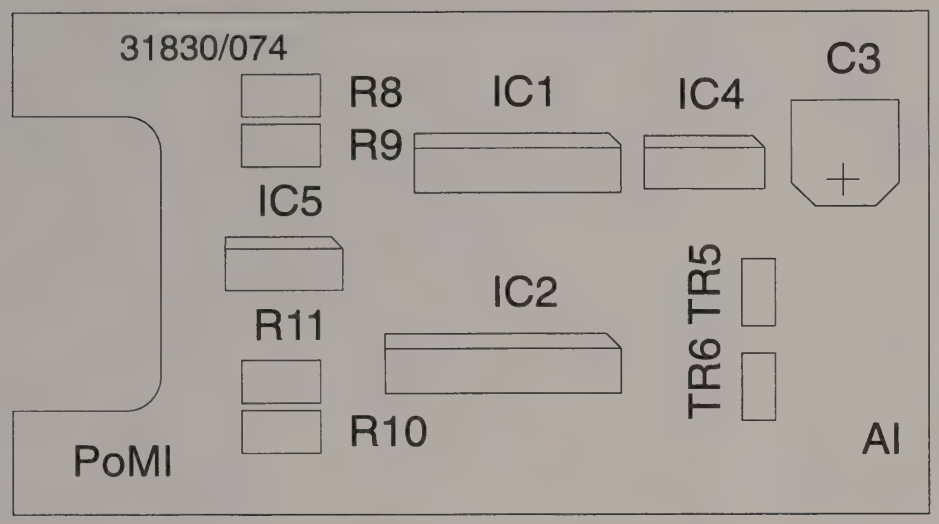

TOP SIDE

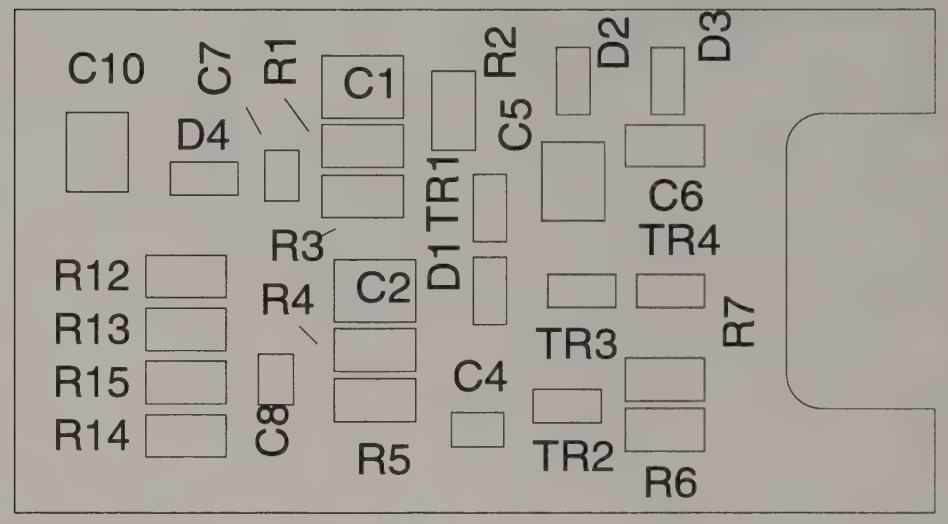

UNDER SIDE

Parallel interface B10

Drg. No. E44830/074 Issue 2

Fig. 7-68 B11 Component layout of light-weight power head interface

Circuit diagram B11

SUPPLY LINE TABLE			
IC	+5V	GND	CAP
IC1	14	7	C7 - 10n
IC2	16	8	C8 - 10n

ACCESSORY INTERFACE

TO 7-WAY DIN ACCESSORY PLUG - PIN :-

POWER METER INTERFACE

TO 8-WAY DIN POWER METER SOCKET - PIN :-

R1 22k1 · C1 220n · IC1(a) 74HC132 · R2 4k75 · R3 2k21 · TR1 FMMT2369 · IC1(b) 74HC132

R11 2k21 · R15 2k21 · R12 22k1 · R13 681k · R16 22k · TR5 BC818 · TR6 FMMT2369

IC2(a) 74HC109 · IC2(b) 74HC109

IC1(c) 74HC132 · C2 220n · R4 681k · D1 BAT54

IC5(a) TL072 · R8 4k75 · R9 10k

R10 10k · IC5(b) TL072 · R11 10k

C3 10u · C10 220n · IC4 78L86 · D4 BAT18

R5 4k75 · IC1(d) 74HC132 · R6 4k75 · C4 10n · R7 10k · TR3 BC818 · TR2 BC818 · TR4 BCX17 · C5 220n · D3 BAT18 · D2 BAT18 · C6 47n

	ACCESSORY PLUG	POWER METER SOCKET
SCL	3	6
SDA	6	1
SDA	1	5
+12V	2	3
SHIELD	4	4
FWD PWR	4	8
REV PWR	5	8
+7.3SV		5
-5V		2
0V		3

7-WAY DIN PLUG (LOOKING AT PINS)

8-WAY DIN SOCKET (LOOKING INTO HOLES)

B11 · 44830-074

Drg. No. Z44830/074 Sheet 1 of 1 Issue 3

Fig. 7-69 B11 Light-weight power head interface

B12

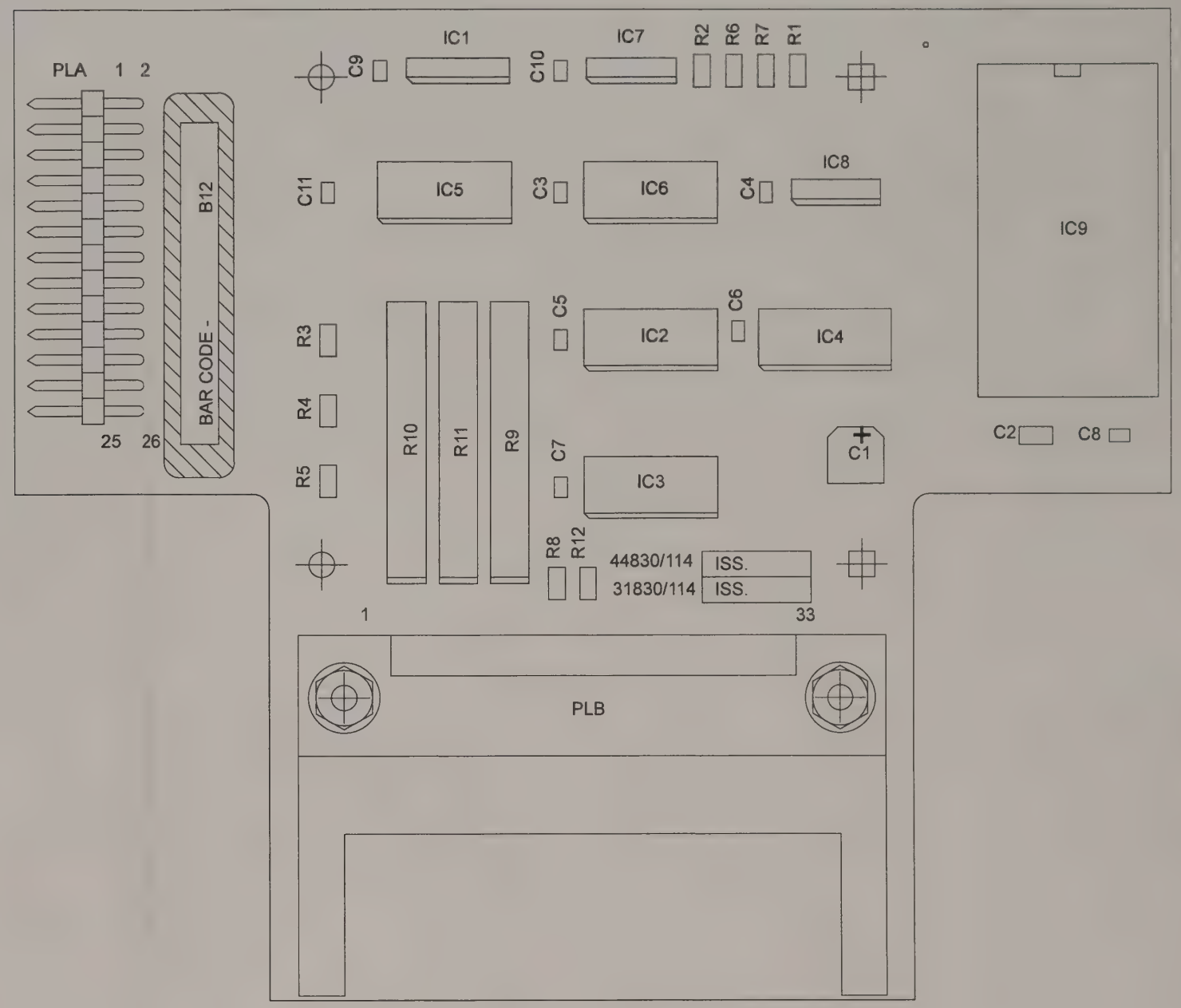

Drg. No. E44830/114

Fig. 7-70 B12 Component layout of memory card and date/time stamp

Light-weight power head interface **B11**

Circuit diagram B12

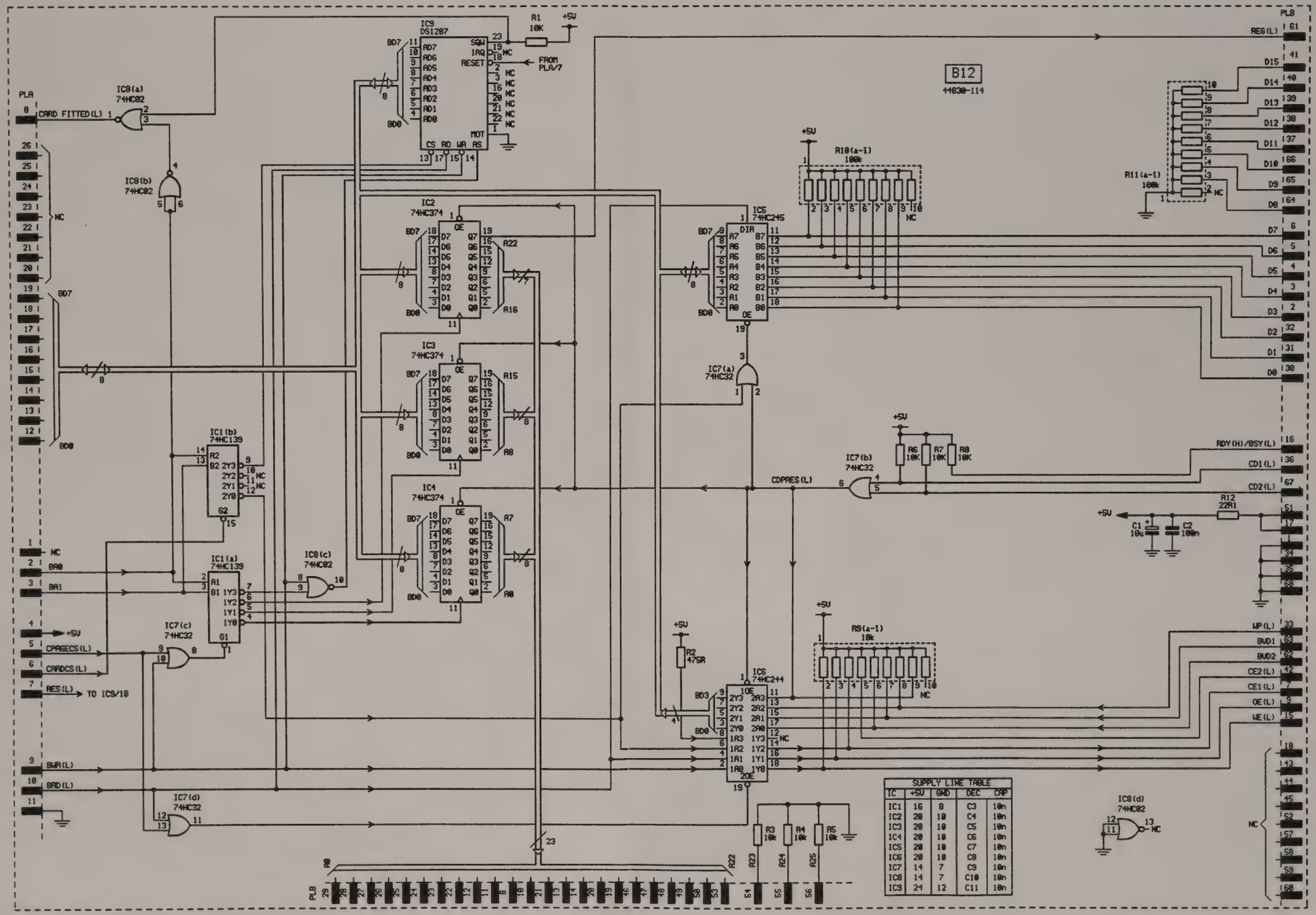

Drg. No. Z44830/114 Sheet 1 of 1 Issue 1

Fig. 7-71 B12 Memory card and date/time stamp

B13

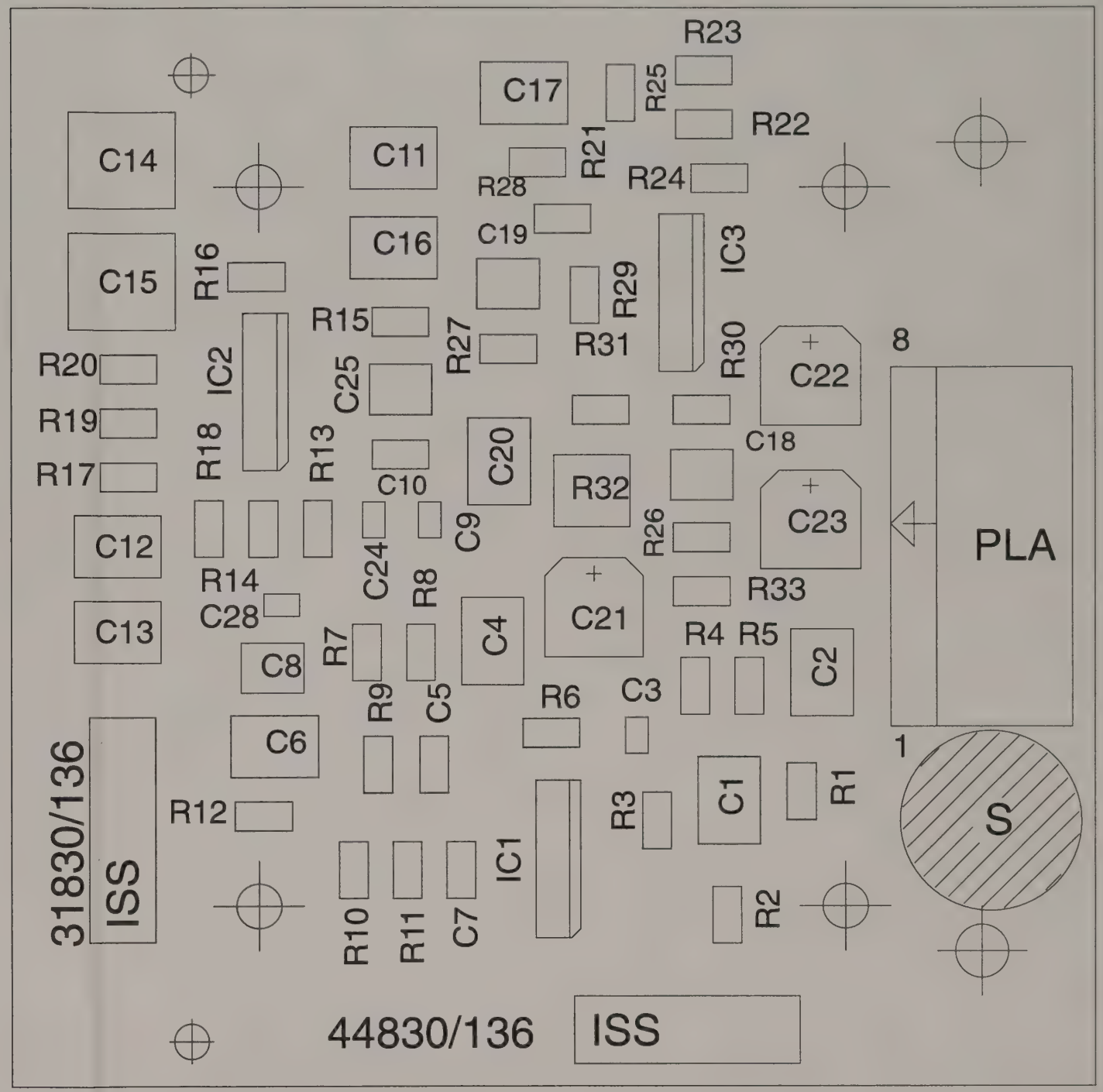

Memory card and date/time stamp **B12**

Drg. No. E44830/136

Fig. 7-72 B13 Component layout of CCITT filter

Circuit diagram B13

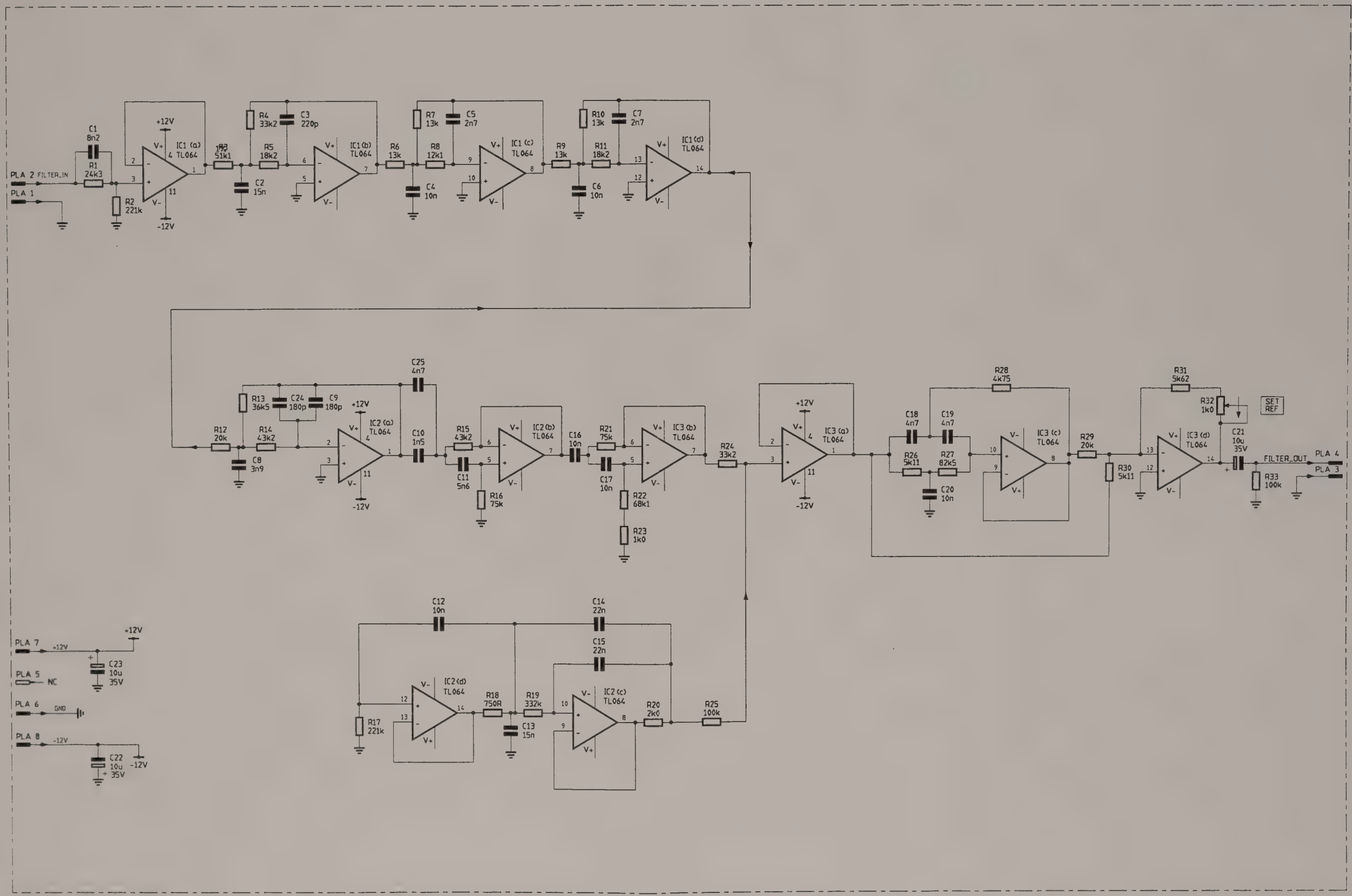

Drg. No. Z44830/136 Sheet 1 of 1 Issue 1

Fig. 7-73 B13 CCITT filter

B13/1

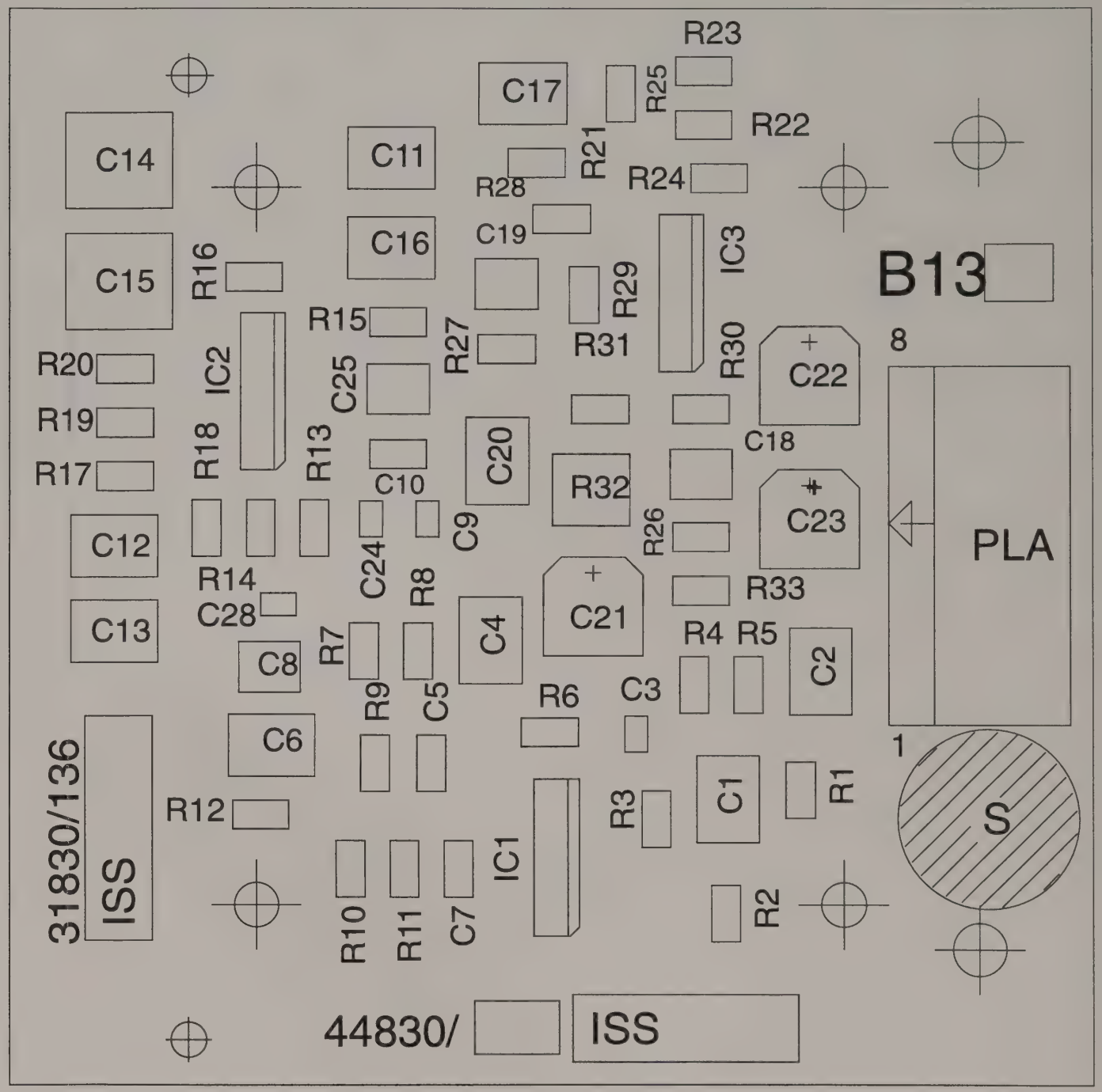

CCITT filter **B13**

Drg. No. E44830/176

Fig. 7-74 B13/1 Component layout of CMESS filter

Circuit diagram B13/1

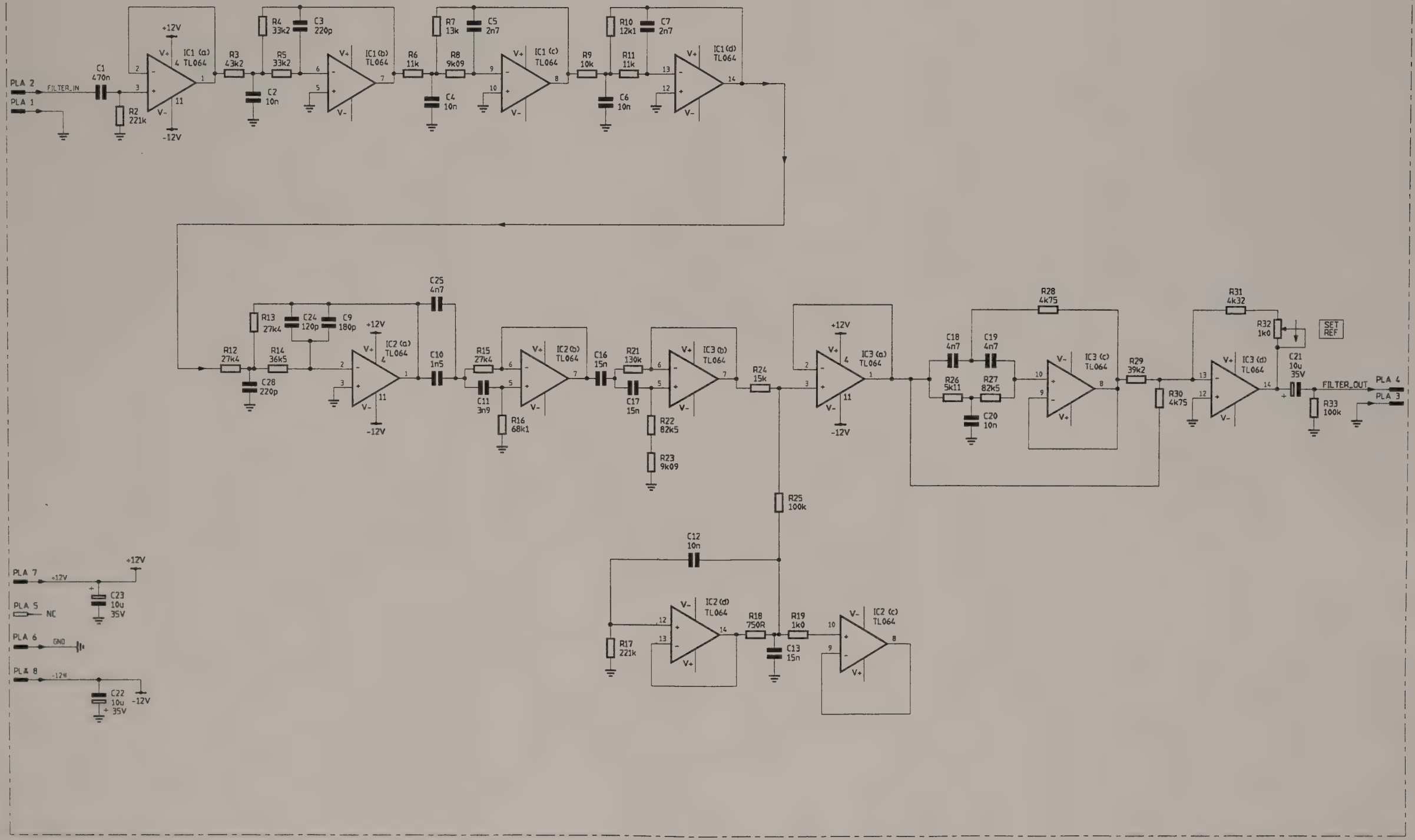

Drg. No. Z44830/176 Sheet 1 of 1 Issue 1

Fig. 7-75 B13/1 CMESS filter

C1

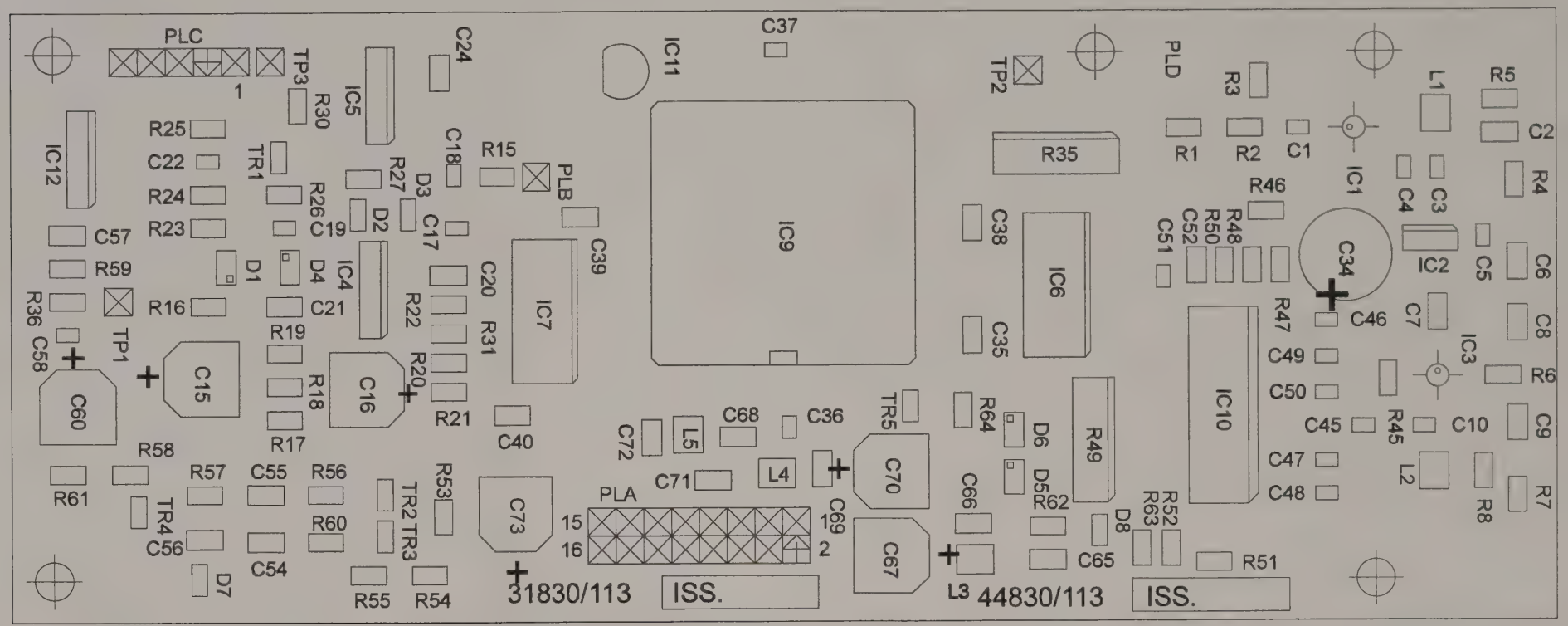

CMESS filter B13/1

Drg. No. E44830/113

Fig. 7-76 C1 Component layout of RF generator control

Circuit diagram C1

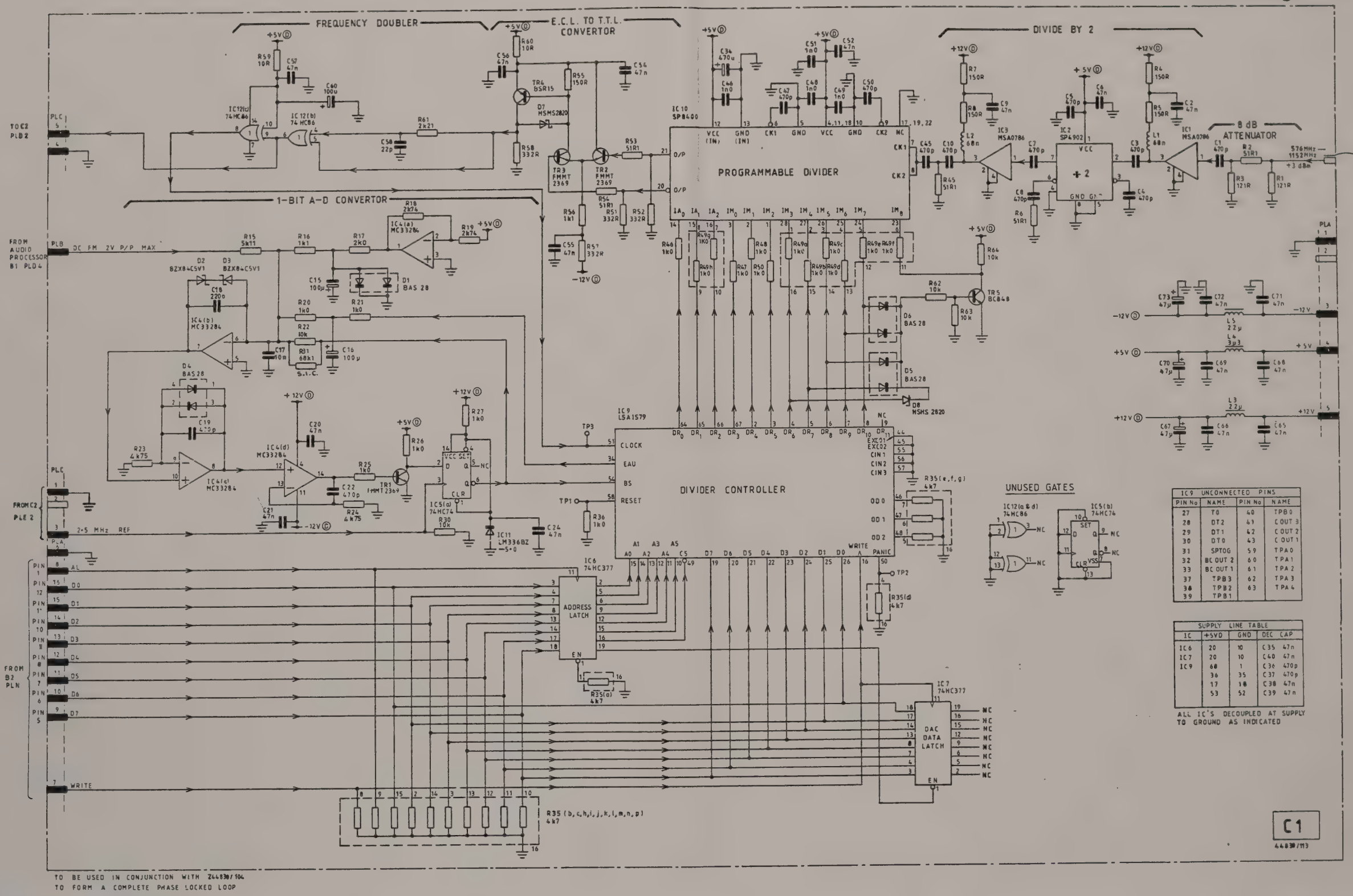

IC9 UNCONNECTED PINS

PIN No	NAME	PIN No	NAME
27	T0	40	TPB0
28	DT2	41	COUT 3
29	DT1	42	COUT 2
30	DT0	43	COUT 1
31	SPTOG	59	TPA0
32	BC OUT 2	60	TPA1
33	BC OUT 1	61	TPA2
37	TPB3	62	TPA3
38	TPB2	63	TPA4
39	TPB1		

SUPPLY LINE TABLE

IC	+5VD	GND	DEC CAP
IC6	20	10	C35 47n
IC7	20	10	C40 47n
IC9	60	1	C36 470p
	36	35	C37 470p
	17	18	C38 47n
	53	52	C39 47n

Drg. No. Z44830/113 Sheet 1 of 1 Issue 2

Fig. 7-77 C1 RF generator control

C2

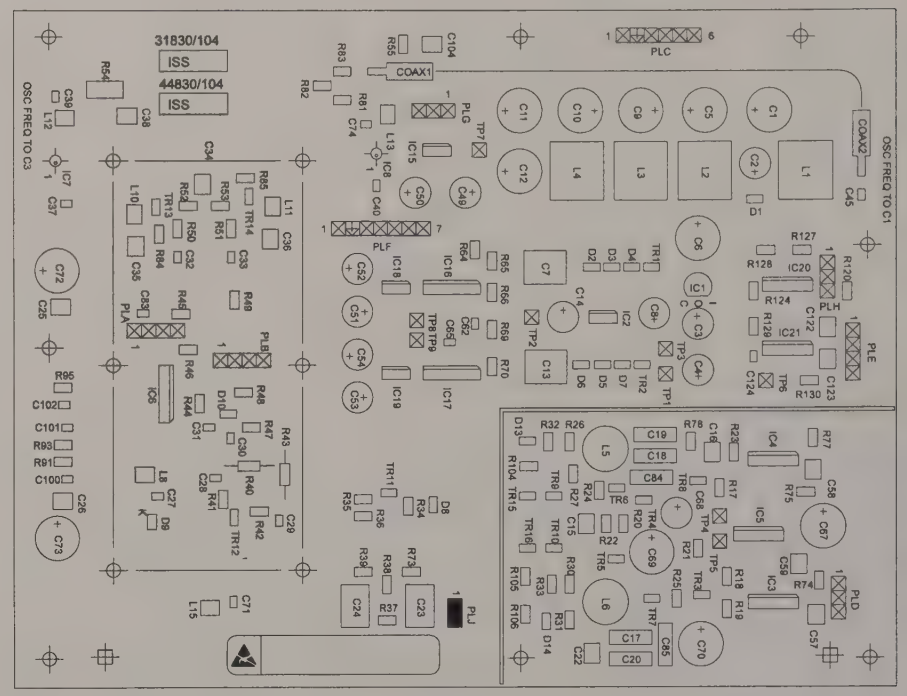

Top side

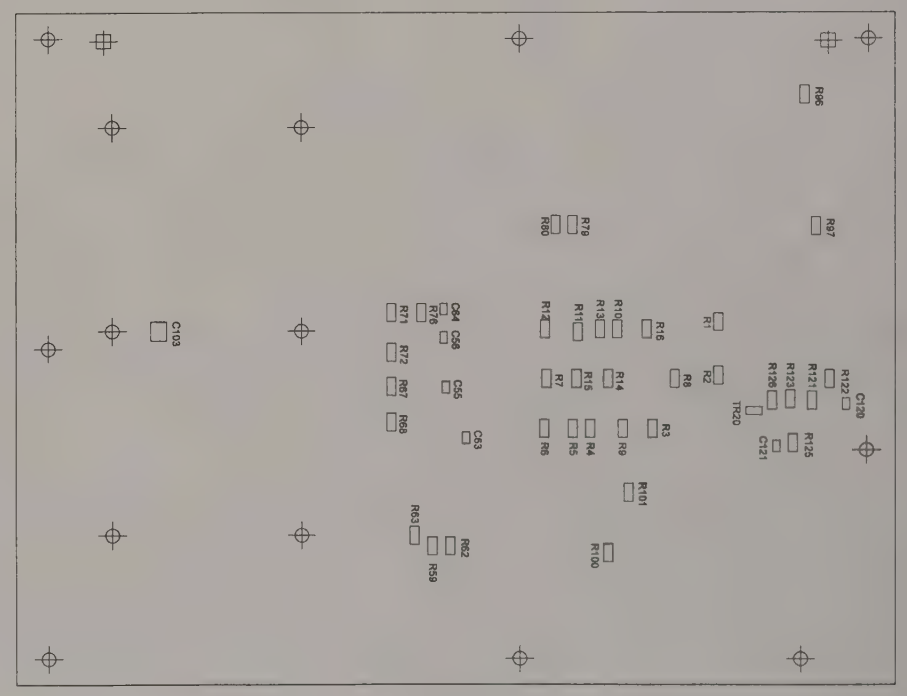

Under side

RF generator control **C1**

Drg. No. E44830/104

Fig. 7-78 C2 Component layout of RF oscillator

Circuit diagram C2

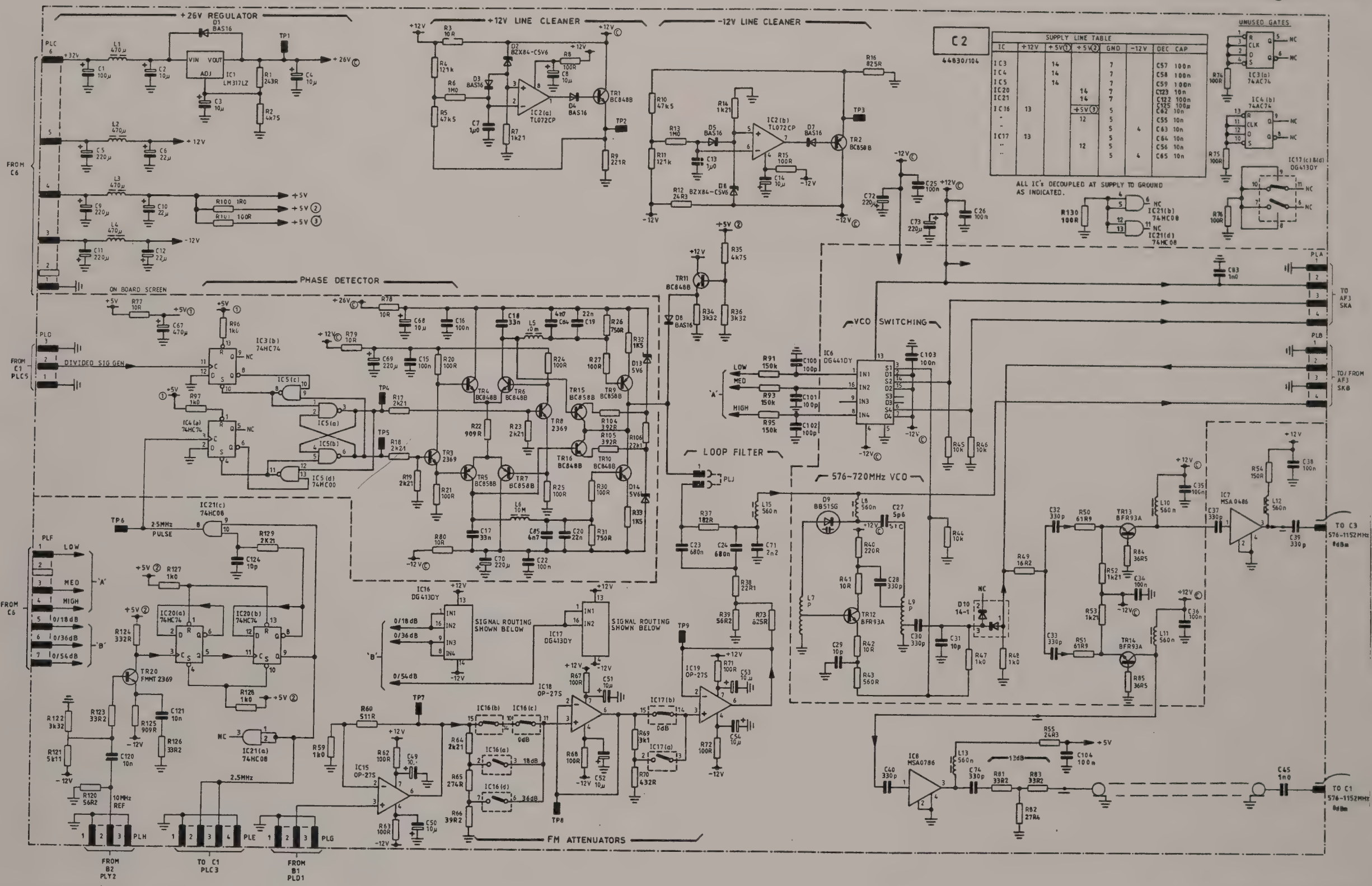

Drg. No. Z44830/104 Sheet 1 of 1 Issue 3

Fig. 7-79 C2 RF oscillator

C3

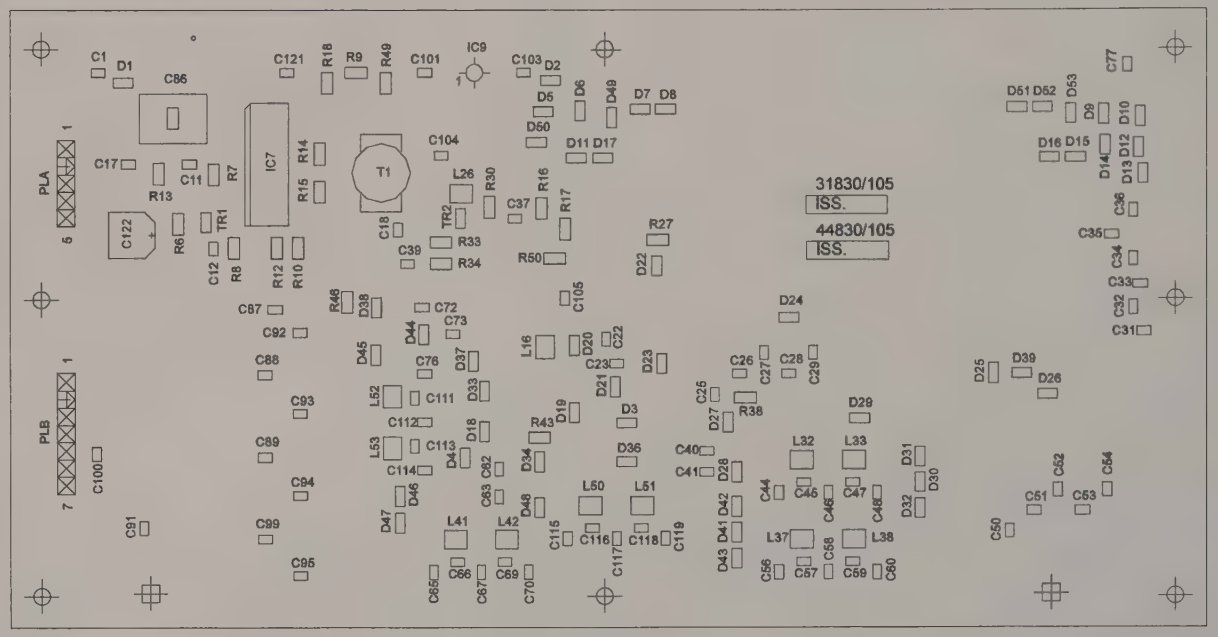

Top side

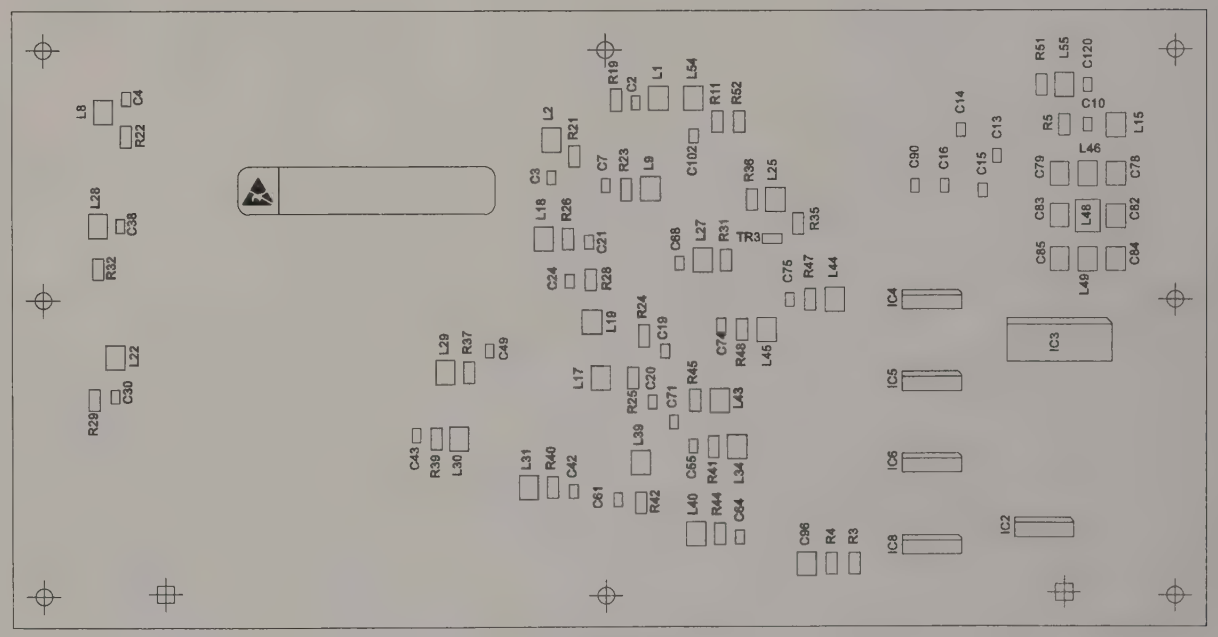

Under side

RF oscillator C2

Drg. No. E44830/105

Fig. 7-80 C3 Component layout of RF divider inc AF3 VCO

Circuit diagram C3

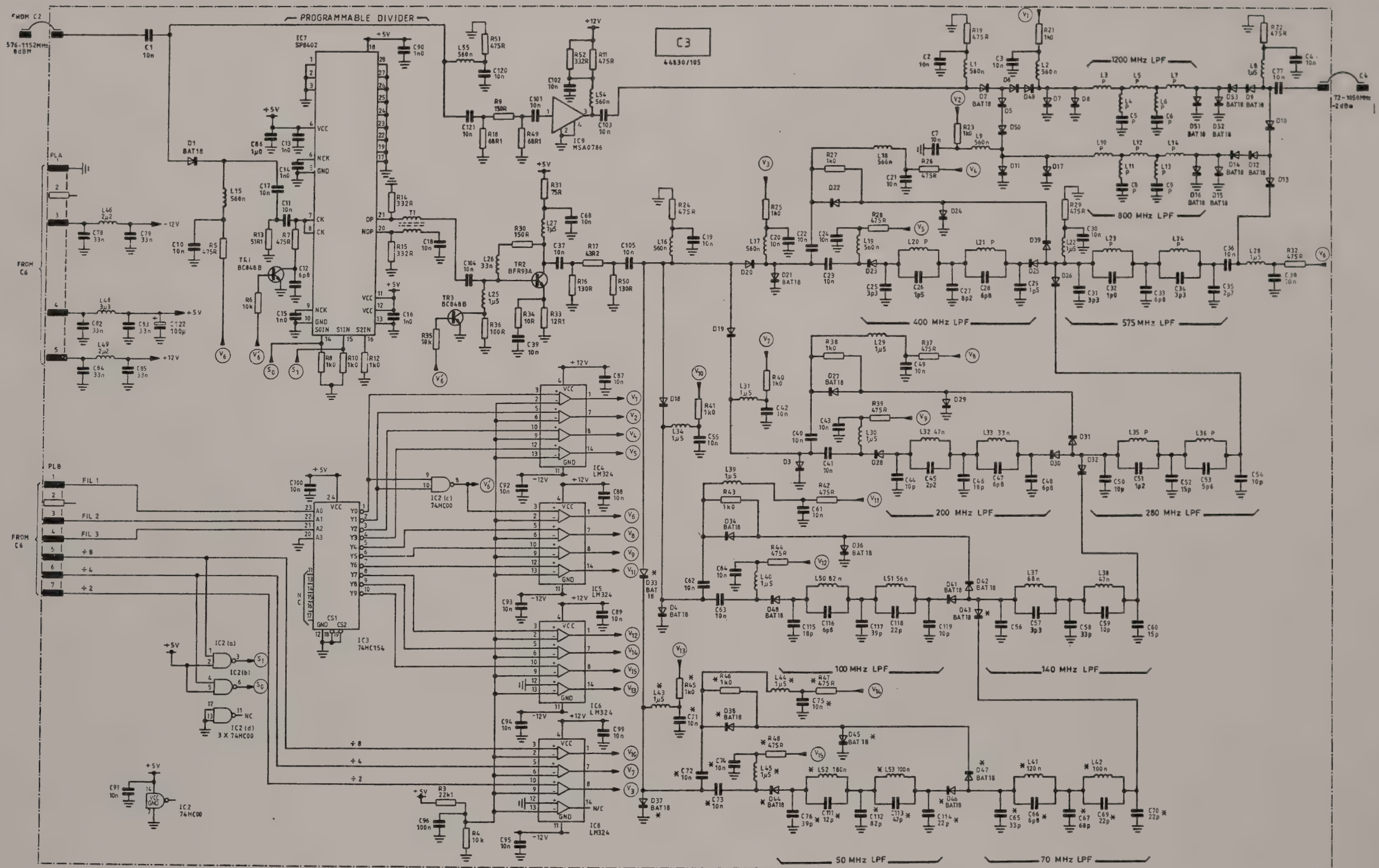

NOTE 1 * COMPONENTS NOT REQUIRED FOR THIS OPTION
NOTE 2 ALL DIODES HSMP-3810 UNLESS OTHERWISE STATED

Drg. No. Z44830/105 Sheet 1 of 1 Issue 1

Fig. 7-81 C3 RF divider inc AF3 VCO

C4

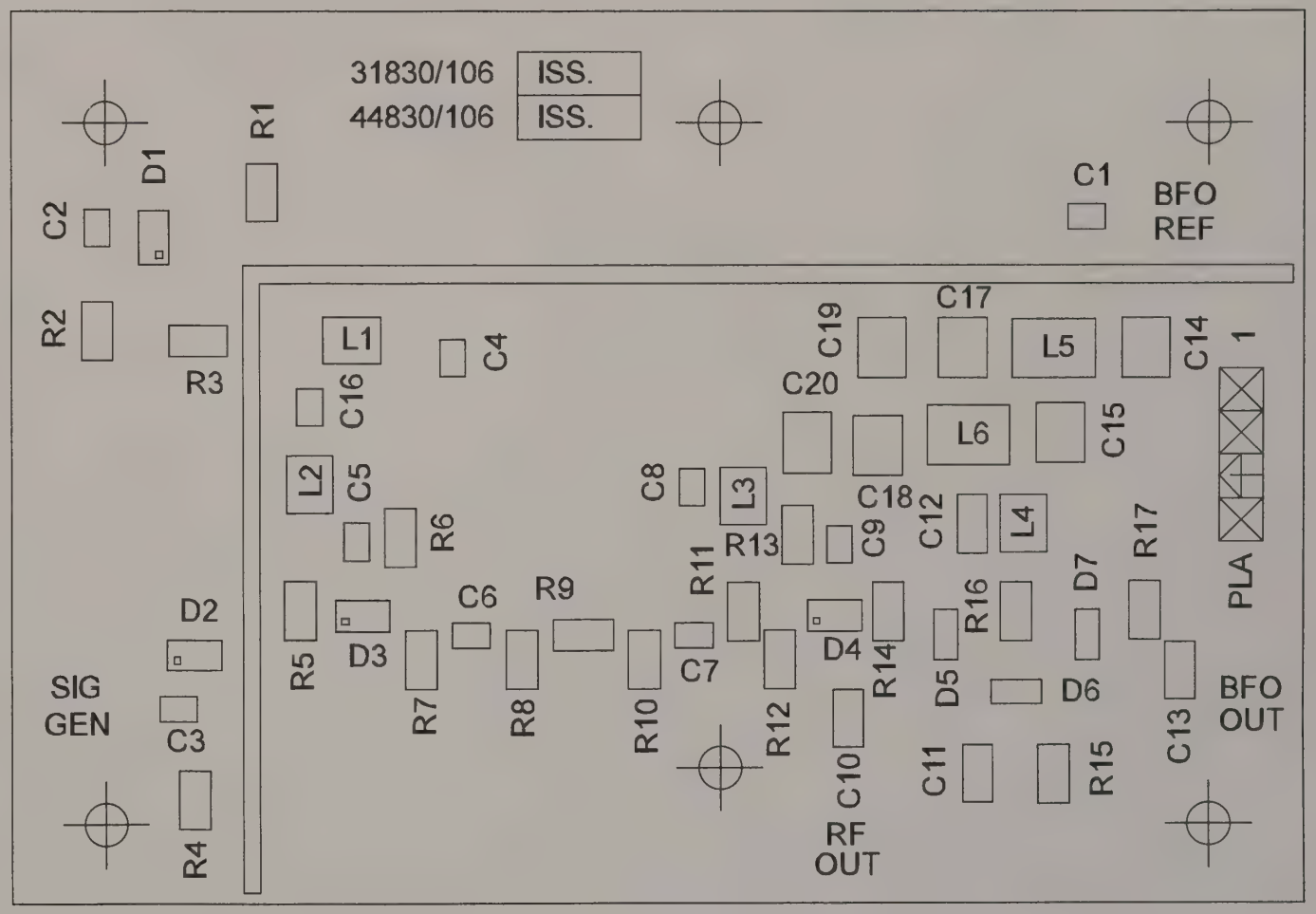

RF divider inc AF3 VCO **C3**

Drg. No. E44830/106

Fig. 7-82 C4 Component layout of Bypass board

Circuit diagram C4

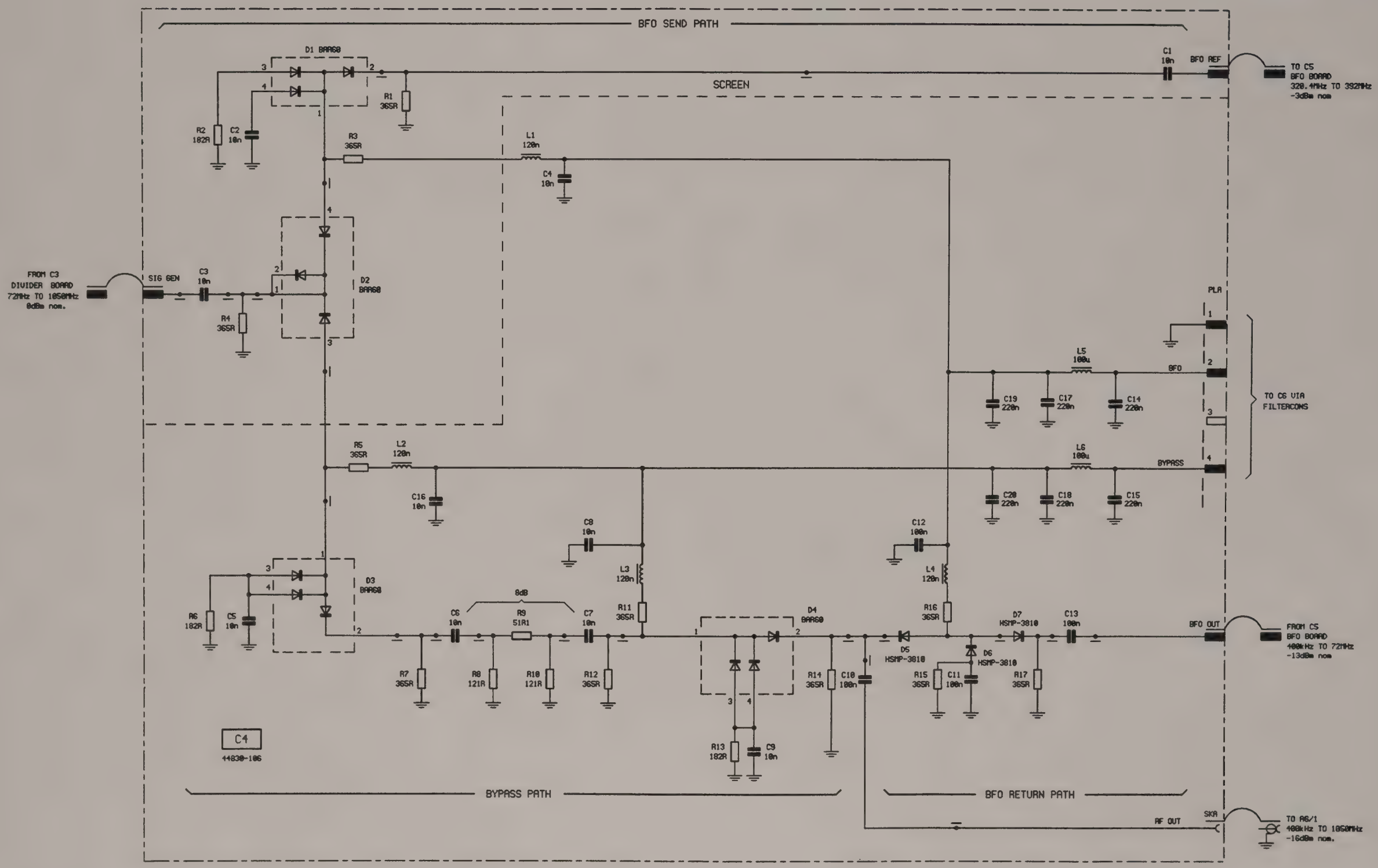

Drg. No. Z44830/106 Sheet 1 of 1 Issue 1

Fig. 7-83 C4 Bypass board

C5

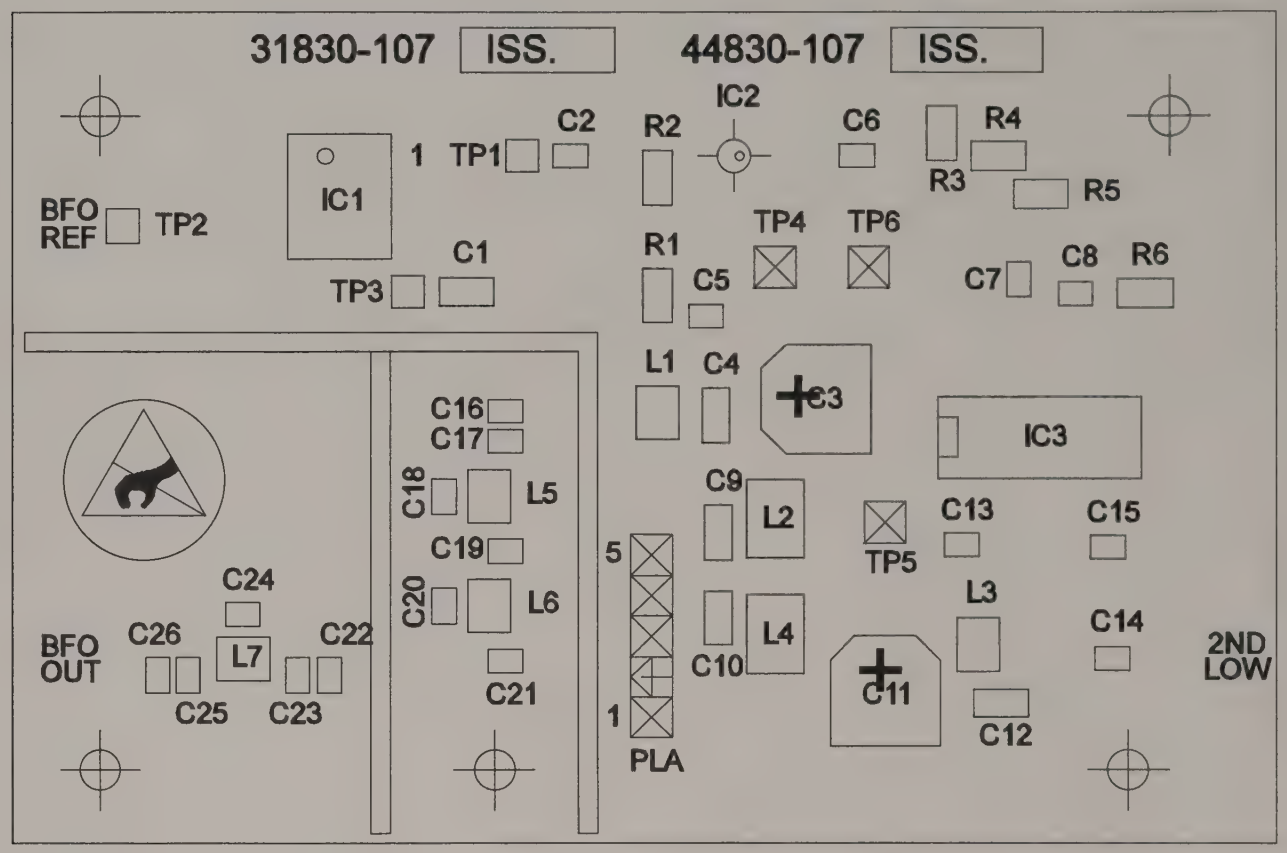

Bypass board **C4**

Drg. No. E44830/107

Fig. 7-84 C5 Component layout of BFO board

Circuit diagram C5

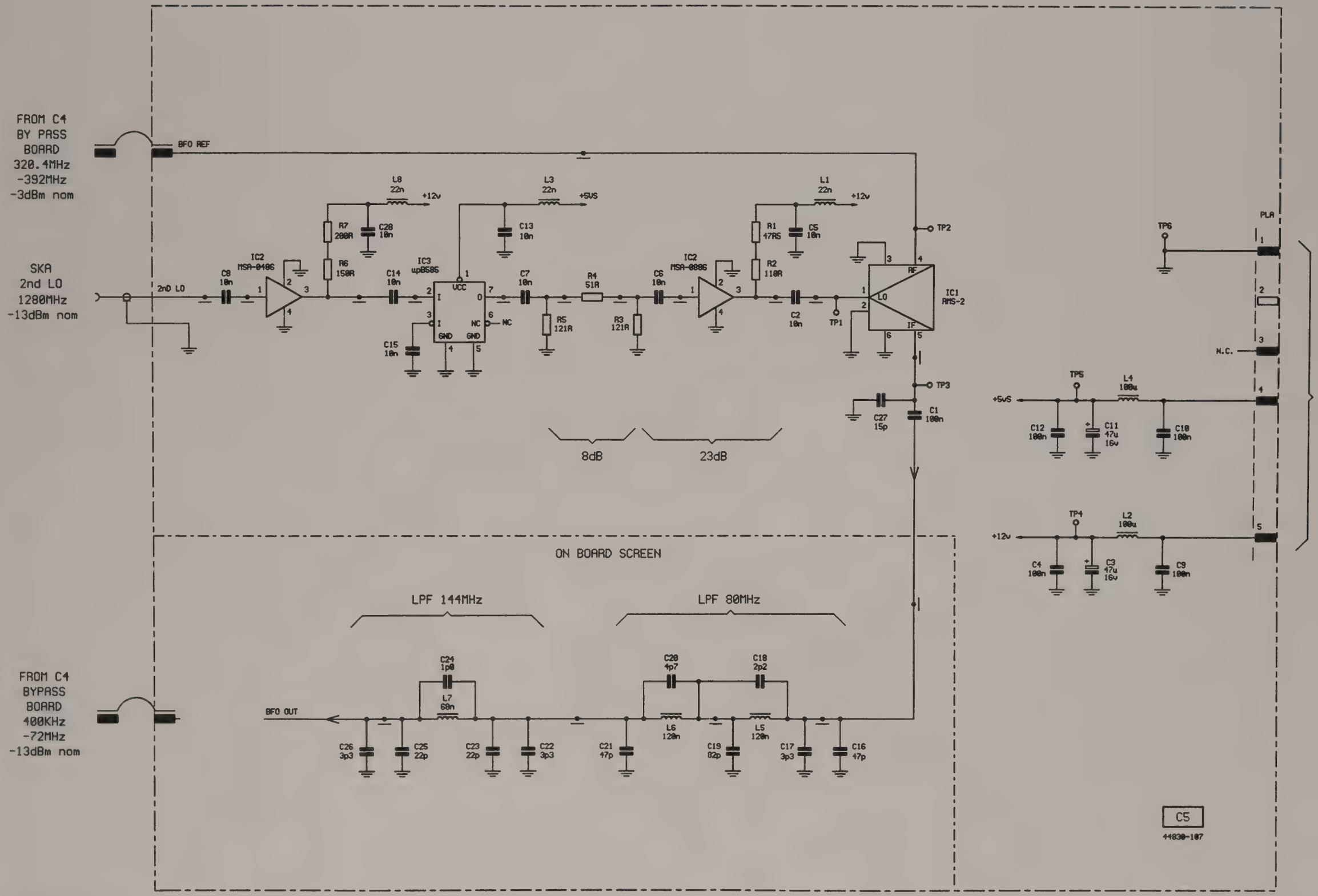

Drg. No. Z44830/107 Sheet 1 of 1

Fig. 7-85 C5 BFO board

C6

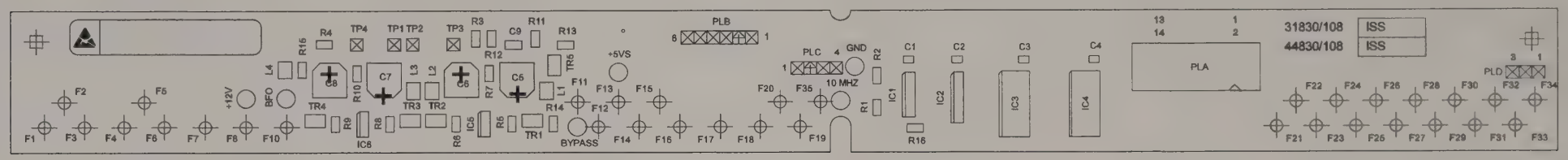

BFO board C5

No. E44830/108

Fig. 7-86 C6 Component layout of RF tray interconnection PCB

Circuit diagram C6

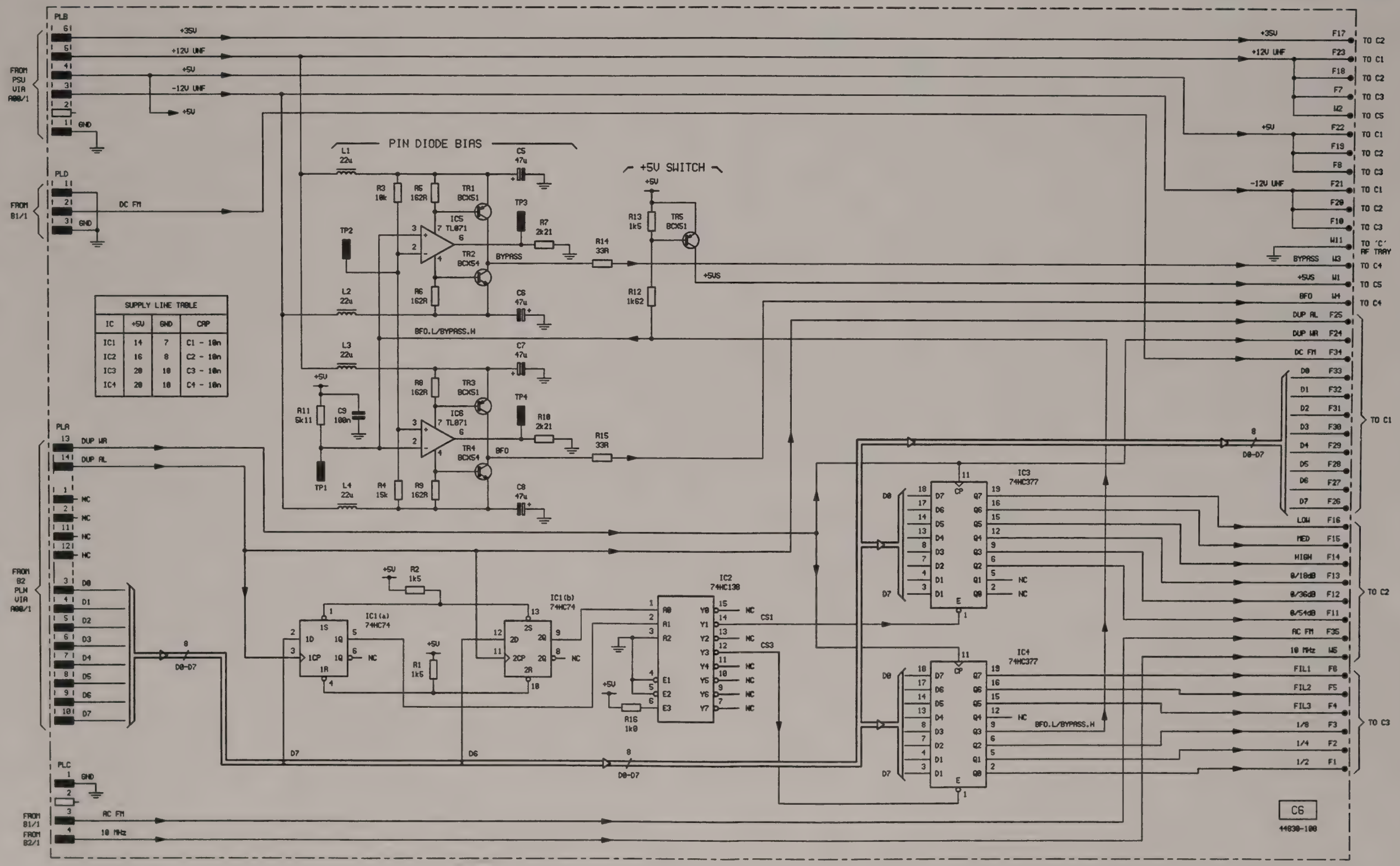

Drg. No. Z44830/108 Sheet 1 of 1

Fig. 7-87 C6 RF tray interconnection PCB

RF tray interconnection PCB **C6**

Composite layout and circuit diagram

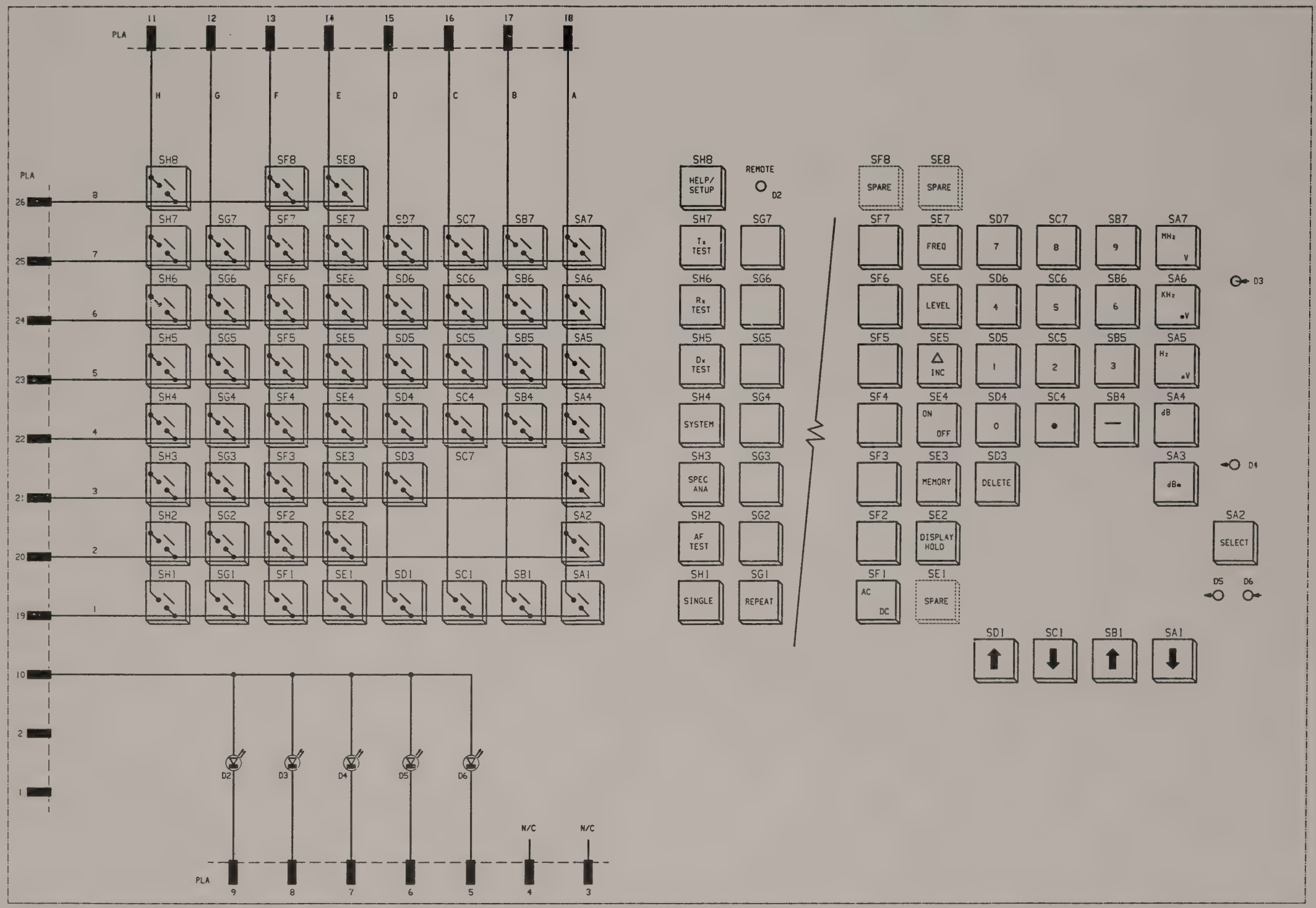

Drg. No. Z46662/603 Sheet 1 of 1 Issue 2

Fig. 7-88 Keyboard

Keyboard

MARCONI INSTRUMENTS LTD
SOFTWARE WARRANTY STATEMENT

Definitions

Any software provided by Marconi Instruments Ltd (MI) is supplied subject to the terms of MI's Software Licence. This is printed on the reverse of our Quotations, will be found with our shrink-wrap Products and is available on request. Software is defined in the Licence as "Licensed Software" and can be further sub-divided as follows;

"Embedded Software" means Licensed Software that forms part of the Equipment supplied by MI and without which the Equipment cannot function.

"Add-In Application Software" means Licensed Software that may be loaded separately from time to time into the Equipment to improve or modify its functionality.

"Computer Application Software" means Licensed Software supplied to run on a standard PC or workstation.

Warranty

1 MI certifies that the Licensed Software supplied by MI will at the time of delivery function substantially in accordance with the applicable Software Product Descriptions, Data Sheets or Product Specifications published by MI

2 Unless you have purchased or been provided with extended warranty for Embedded Software the warranty period from date of delivery in respect of each type of Licensed Software is

(i) Embedded Software 12 months

(ii) Add-In Application Software 90 days

(iii) Computer Application Software 90 days

3 If during the appropriate Warranty Period the Licensed Software does not conform substantially to the above Software Product Descriptions, Data Sheets or Product Specifications MI will provide

a) In the case of Embedded Software and at MI's discretion either a fix for the problem or an effective and efficient work around.

b) In the case of Add-In Application Software and Computer Application Software and at MI's discretion replacement of the software or a fix for the problem or an effective and efficient work around.

MI does not warrant that the operation of any software will be uninterrupted or error free.

Limitation of Warranty

The above Warranty does not apply to;

(i) defects resulting from software not supplied by MI, from unauthorised modification or misuse or from operation outside of the specification.

(ii) third party produced Proprietary Software which MI may deliver with its products, in such case the third party Software Licence Agreement including its warranty terms shall apply.

Exclusive Remedies

The remedies offered above are your sole and exclusive remedies and to the extent permitted by applicable law are in lieu of any implied conditions, guarantees or warranties whatsoever and whether statutory or otherwise as to the software all of which are hereby expressly excluded.

Marconi
Instruments

Regional Offices

The international country codes in telephone and fax numbers are shown in square brackets [ ] whilst the national area codes are identified by round brackets ( ).

UNITED KINGDOM

Marconi Instruments Ltd
Longacres House
Norton Green Road
STEVENAGE
Hertfordshire SG1 2BA
United Kingdom
Telephone: [+44] (1438) 742200
Fax: [+44] (1438) 727601
Telex: 23350 MARCON G

AUSTRALIA

Marconi Instruments (Pty) Ltd
Unit 1
38 South Street
Rydalmere,
NEW SOUTH WALES, 2116
Australia
Telephone: [+61] (2) 638 0800
Fax: [+61] (2) 638 3131

FRANCE

Marconi Instruments SA
18 Rue du Plessis-Briard
"Le Canal"
Courcouronnes
91023 EVRY CEDEX
France
Telephone: [+33] (1) 60 79 96 00
Fax: [+33] (1) 60 77 69 22

HONG KONG

Marconi Instruments International Ltd.
Room 702-703,
CC Wu Building
302-308 Hennessy Road
WANCHAI
Hong Kong
Telephone: [+852] 2832 7988
Fax: [+852] 2834 5364
Email: mihk@asiansources.com

UK SERVICE DIVISION

Marconi Instruments Ltd
The Airport
LUTON
Bedfordshire LU2 9NS
United Kingdom
Telephone: [+44] (1582) 33866
Fax: [+44] (1582) 417573

GERMANY

Marconi Messtechnik GmbH
Landsberger Strasse 65
D-82110 GERMERING
Germany
Telephone: [+49] (89) 84 9360
Fax: [+49] (89) 84 19142
Telex: 5212642 MMMC D

NETHERLANDS

Marconi Instrumenten
Van Limburg Stirumlaan 4
5037 SK TILBURG
Postbus 645
5000 AP TILBURG
Netherlands
Telephone: [+31] (13) 463 95 40
Fax: [+31] (13) 4639663

SINGAPORE

Marconi Instruments International Ltd
ASEAN Regional Centre
GEC Building
3 Tai Seng Drive
SINGAPORE 535216
Telephone: [+65] 381 1470
Fax: [+65] 281 0113
Telex: 36370 GECSRSRS

SPAIN

Marconi Instrumentos S.A.
Europa Empresarial
C/Rozabella, No. 6
Edif. Paris, Planta Baja, Oficina 1
28230 LAS ROZAS
Madrid, Spain
Telephone: [+34] (1) 640 11 34
Fax: [+34] (1) 640 06 40
Telex: 57481 MIES E

USA

Marconi Instruments Inc.
13600 Heritage Parkway
Fort Worth
Texas 76117
USA
Telephone: [+1] (817) 224 9200
Fax: [+1] (817) 244 9201

International Service Centres

All Marconi Instruments products are supported by the following network of service centres. Details of these establishments may change from time to time. If you require support please contact your local distributor at the relevant address detailed below. If you experience difficulties, please contact the Customer Support Group - ILS at our Head Office in the UK.

ARGENTINA

V.R.Marine Electronics
(RF Instrumentos)
Tacuman 858 - 6 TO Piso L
(1049) BUENOS AIRES
Republic of Argentina
Telephone: [+54] (1) 311 0424/7432
Fax: [+54] (1) 312 2799
Telex: 21833 JUDD AR

AUSTRALIA

Marconi Instruments (Pty) Ltd
Unit 1
38 South Street
Rydalmere,
NEW SOUTH WALES, 2116
Australia
Telephone: [+61] (2) 638 0800
Fax: [+61] (2) 638 3131

AUSTRIA

LB-Electronics GmbH
Doblinger Hauptstrasse 95
A-1190 WIEN
Austria
Telephone: [+43] (1) 36031
Fax: [+43] (1) 3698443

BANGLADESH

AEI-EE of Bangladesh Ltd
Magnet House 71-72
Dilkusha Commercial Area
DHAKA 1000
Bangladesh
Telephone: [+880] (2) 46031-46037
Fax: [+880] (2) 863278
Telex: 642818 BDI BJ

BELGIUM

Marconi Instrumenten
Van Limburg Stirumlaan 4
5037 SK TILBURG
Postbus 645
5000 AP TILBURG
Netherlands
Telephone: [+31] (13) 4639540
Fax: [+31] (13) 4639663

BOTSWANA

Measuretest cc
Unit 16 Villa Vlencia Office Park
Monument Road
Glen Marais
Kempton Park
Gauteng
South Africa
Telephone: [+27] (11) 396 4502/4/5
Fax: [+27] (11) 396 4510

BRAZIL

Marconi Instruments Inc.
Suite 100
13600 Heritage Parkway
Fort Worth
Texas 76117
USA
Telephone: [+1] (817) 224 9200
Fax: [+1] (817) 224 9201

BRUNEI

Marconi Instruments International Ltd
ASEAN Regional Centre
GEC Building, 3 Tai Seng Drive
SINGAPORE 535216
Telephone: [+65] 381 1470
Fax: [+65] 281 0113

BULGARIA

GOPE Electronics
45 "Popova Shapka" Str
1505 SOFIA
Bulgaria
Telephone: [+359] (2) 708357
Fax: [+359] (2) 708357

CHILE

Morgan & Cia SA
Almirante Pastene 256
Casilla (PO Box) 1-T Tajamar
SANTIAGO
Chile
Telephone: [+56] (2) 236 1278
Fax: [+56] (2) 235 7552

CHINA

Marconi Instruments Service Centre
Department of Electronic Engineering
Beijing Institute of Technology
7 Baishi Qiao Road
BEIJING 100081
Peoples Republic of China
Telephone: [+86] (10) 6842 7954
Fax: [+86] (10) 6842 7954
Telex: 22011 BIT CN

CHINA

Marconi Instruments Service Centre
88 Jiang An Road
SHANGHAI 200233
Peoples Republic of China
Telephone: [+86] (21) 64821947
Fax: [+86] (21) 64821947

COLOMBIA

Selectronica Limitada
Carrera 71 No. 55-98 A.A.25124
Santafe de Bogota
Colombia
Telephone: [+57] (1) 2953215
[+57] (1) 2631220
Fax: [+57] (1) 2632874

CZECH REPUBLIC

EMPOS Spol. S.R.O.
Rostislavova 13
140 00 PRAHA 4
Czech Republic
Telephone: [+42] (2) 692 50 80
Fax: [+42] (2) 692 50 84

DENMARK

Stantronic Ormhøjgårdvej 16
DK 8700 HORSENS
Denmark
Telephone: [+45] 75 643366
Fax: [+45] 75 644080

EGYPT

Multi-Systems Engineering
21 El Obour Building
Salah Salem, Floor 18
CAIRO
Egypt
Telephone: [+20] (2) 2632771
Fax: [+20] (2) 4028057

FIJI

Marconi Instruments (Pty) Ltd
Unit 1
38 South Street
Rydalmere,
NEW SOUTH WALES, 2116
Australia
Telephone: [+61] (2) 9638 0800
Fax: [+61] (2) 9638 3131

FINLAND

Kaukomarkkinat Oy
Kutojantie 4
P. O. Box 40
SF-02630 ESPOO 63
Finland
Telephone: [+358] (9) 5211
Fax: [+358] (9) 521 5290
Telex: 124469 KAUKO SF

FRANCE

Marconi Instruments SA
18 Rue du Plessis-Briard
"Le Canal"
Courcouronnes
91023 EVRY CEDEX
France
Telephone: [+33] (1) 60 79 96 00
Fax: [+33] (1) 60 77 69 22

GERMANY

Marconi Messtechnik GmbH
Landsberger Strasse 65
D-82110 GERMERING
Germany
Telephone: [+49] (89) 84 9360
Fax: [+49] (89) 84 19142
Telex: 5212642 MMMC D

GREECE

Theodorou Automation SAICT
3 Aftomedontos Street
116 35 Athens
Greece
Telephone: [+30] (1) 7010069
Fax: [+30] (1) 7518829

HUNGARY

MTA-MMSZ Ltd
59-61 Etele ut
H-1119 BUDAPEST
Hungary
Telephone: [+36] (1) 2034298
Fax: [+36] (1) 2034353
Telex: 225114 MTAMM H

ICELAND

Amundason HF
Langholtsvegur 109
P. O. Box 4207
124 REYKJAVIK
Iceland
Telephone: [+354] 5687820
Fax: [+354] 5889318
Telex: 2108 AMCO IS

INDIA

Blue Star Limited
Head Office
Sahas, 414/2 Veer Savarkar Marg
Prabhadevi
BOMBAY 100 025
India
Telephone: [+91] (22) 4306 155 or
[+91] (22) 4306 185
Fax: [+91] (22) 4307 078

INDIA

Blue Star Limited
13 Community Centre
New Friends Colony
NEW DEHLI 110 065
India
Telephone: [+91] (11) 6911 660 or
[+91] (11) 6834 262
Fax: [+91] (11) 6841 845

INDIA

Blue Star Limited
Blue Star House
11 Magarath Road
BANGALORE 560 025
India
Telephone: [+91] (80) 5584 727 or
[+91] (80) 5584 729
Fax: [+91] (80) 5584 599

INDIA

Blue Star Limited
2-2-47, 47/1108,
Bolarum Road
SECUNDERABAD 580 009
India
Telephone: [+91] (40) 842 057 or
[+91] (40) 841 278
Fax: [+91] (40) 841 445

INDONESIA

P.T. Panorama Timur Jaya
J1. Paus 89 D-E
Rawamangun
JAKARTA 13220
Indonesia
Telephone: [+62] (21) 475 6788
Fax: [+62] (21) 475 1688

IRAN

Wavecut Electronics Ltd
PO Box 13185-1341
TEHRAN
Iran
Telephone: [+98] (21) 6436004
Fax: [+98] (21) 540705

IRELAND

Neltronic Ltd
John F. Kennedy Road
Naas Road
DUBLIN 12
Eire
Telephone: [+353] (1) 503560
Fax: [+353] (1) 552789
Telex: 93556 NELT EI

ISRAEL

IES Electronics Agencies (1986) Ltd
32 Ben Gurion Street
RAMAT GAN 52573
Israel
Telephone: [+972] (3) 753 0753 or
[+972] (3) 753 0700
Fax: [+972] (3) 753 0701
Telex: 361396 IES IL

ITALY

Federal Trade SpA
Via Leonardo da Vinci 21/23
20090 Segrate
MILANO
Italy
Telephone: [+39] (2) 2134034/5
Fax: [+39] (2) 2133970

JAPAN

Kikusui Electronics Corp.
1-1-3, Higashiyamata
Tsuzuki-ku
Yokohama City
224-0023
Japan
Telephone: [+81] (45) 593 7580
Fax: [+81] (45) 593 7581

KENYA

GPT Kenya Ltd
Uhuru Highway
P.O. Box 40743
NAIROBI
Kenya
Telephone: [+254] (2) 555011
Fax: [+254] (2) 541556
Telex: 24053

KOREA, SOUTH

Zino International
Youngsung Bldg.
108-4 Samsung-dong
Kangnam-ku
SEOUL 135 091
Republic of Korea
Telephone: [+82] (2) 545 7334
Fax: [+82] (2) 545 7335
Email:allzino@chollian.dacom.co.kr

KUWAIT

Al Nawasi Trading & Contracting Co.
PO Box 3204
13033 SAFAT
Kuwait
Telephone: [+965] 244 7243
Fax: [+965] 241 0473
Telex: 22131 AAA KT

LEBANON

Mabek
P.O. Box 13-5657
BEIRUT
Lebanon
Telephone: [+961] (1) 864479
Fax: [+961] (1) 603129
Telex: 22889 MABEK LE

LIECHTENSTEIN

Isatel Emitec AG
Hinterbergstrasse 9
6330 CHAM
Switzerland
Telephone: [+41] (42) 41 80 41
Fax: [+41] (42) 41 80 43

LUXEMBOURG

Marconi Instrumenten
Van Limburg Stirumlaan 4
5037 SK TILBURG
Postbus 645
5000 AP TILBURG
Netherlands
Telephone: [+31] (13) 639540
Fax: [+31] (13) 639663

MACAU

Marconi Instruments International Ltd
Room 702-703
CC Wu Building
302-308 Hennessy Road
WANCHAI
Hong Kong
Telephone: [+852] 2832 7988
Fax: [+852] 2834 5773

MALAYSIA

Mahkota Technologies Sdn Bhd
Wisma Mahkota
Jalan 215 Templer
46050 PETALING JAYA
Selangor, Malaysia
Telephone: [+60] (3) 791 1388
Fax: [+60] (3) 792 1350 or
[+60] (3) 791 1886
Telex: 37617 GECMYA MA

NAMIBIA

Measuretest cc
P.O. Box 6301
DUNSWART 1508
Transvaal
Republic of South Africa
Telephone: [+27] (11) 894 7721
Fax: [+27] (11) 894 6414
Telex: 747651 MTEST SA

NETHERLANDS

Marconi Instrumenten
Van Limburg Stirumlaan 4
5037 SK TILBURG
Postbus 645
5000 AP TILBURG
Netherlands
Telephone: [+31] (13) 463 95 40
Fax: [+31] (13) 4639663

NEW ZEALAND

Components & Instrumentation N.Z. Ltd
P. O. Box 38099
Wellington Mail Centre
19-21 Pretoria Street
LOWER HUTT
New Zealand
Telephone: [+64] (4) 566 3222
Fax: [+64] (4) 566 3722

NIGERIA

General Telecom Ltd
18 Moloney Street
P.O. Box 2213
LAGOS
Nigeria
Telephone: [+234] (1) 2645530
Fax: [+234] (1) 2645529

NORWAY

Nortronicom a/s
P.O. Box 33
Manglerud
0612 OSLO 6
Norway
Telephone: [+47] (22) 68 09 10
Fax: [+47] (22) 68 18 87
Telex: 77140 NM M

OMAN, SULTANATE OF

Suhail & Saud Bahwan
PO Box 169
MUSCAT
Sultanate of Oman
Telephone: [+968] 793741
Fax: [+968] 796158
Telex: 3585 BAHWAN ON

PAKISTAN

Intermark Ltd
P.O. Box 6159
Hakimsons Building
19 West Wharf Road
KARACHI 74000
Pakistan
Telephone: [+92] (21) 201725
Fax: [+92] (21) 231 04801
Telex: 23649 YAQIN PK

PHILIPPINES

Sunley Inc
8/F RCI Building
105 Rada Street
Legaspi Village
Makati
METRO MANILA
Philippines
Telephone: [+63] (2) 818 1216
Fax: [+63] (2) 815 0730
Telex: 62098 MANILA PN

POLAND

Interlab P.U.H.
Ul. Potocka 14, PAW 3
01-641 WARSAW
Poland
Telephone: [+48] (22) 333961 or
[+48] (22) 333956
Fax: [+48] (22) 3332260 or 333956

PORTUGAL

Pinto Basto Electrotecnia e Maquinas Ltda
Av. 24 de Julho
3-1 Esq
1200 LISBON
Portugal
Telephone: [+351] (1) 3972041
Fax: [+351] (1) 3972595
Telex: 16819 SOCIL P

QATAR

Business Communications Qatar Ltd
PO Box 150
DOHA
Qatar
Telephone: [+974] 325851
Fax: [+974] 414100
Telex: 4219 JAIDAH DH

SAUDI ARABIA

Electronic Equipment Marketing Co
P.O. Box 3750
RIYADH 11481
Kingdom of Saudi Arabia
Telephone: [+966] (1) 477 1650
Fax: [+966] (1) 478 5140
Telex: 401120 ZUHAIR SJ

SAUDI ARABIA

Electronic Equipment Marketing Co
Al Badariah Centre
3rd Floor, Suite 202
Pepsi Coal Road
AL KHOBAR
Kingdom of Saudi Arabia
Telephone: [+966] (3) 859 1888
ext 717
Fax: [+966] (3) 859 1888 ext 617

SAUDI ARABIA

Electronic Equipment Marketing Co
Abu Al-Fadel-Street
Palestin Road
JEDDAH
Kingdom of Saudi Arabia
Telephone: [+966] (2) 6652146
Fax: [+966] (2) 6655804

SINGAPORE

Marconi Instruments International Ltd
ASEAN Regional Centre
GEC Building
3 Tai Seng Drive
SINGAPORE 535216
Telephone: [+65] 381 1470
Fax: [+65] 281 0113
Telex: 36370 GECSRSRS

SLOVAKIA REPUBLIC

EMPOS s.r.o.
Rostislavova 13
140 00 PRAHA 4
Czech Republic
Telephone: [+38] (2) 692 50 80
Fax: [+38] (2) 692 50 84

SLOVENIA

SIQ
SI-61000
LJUBLJANA
Slovenia
Trzaska c.2
Telephone: [+386] 61 1258 212
Fax: [+386] 61 218 020
Telex: 31 265 YU ZAVTOM

SOUTH AFRICA

Measuretest cc
Unit 16 Villa Vlencia Office Park
Monument Road
Glen Marais
Kempton Park
Gauteng
South Africa
Telephone: [+27] (11) 396 4502/4/5
Fax: [+27] (11) 396 4510

SPAIN

Marconi Instrumentos S.A.
Europa Empresarial
C/Rozabella, No. 6
Edif. Paris, Planta Baja, Oficina 1
28230 LAS ROZAS
Madrid, Spain
Telephone: [+34] (1) 640 11 34
Fax: [+34] (1) 640 06 40
Telex: 57481 MIES E

SWEDEN

Pronesto AB
Box 6014
164 06 KISTA
Sweden
Telephone: [+46] (8) 444 1050
Fax: [+46] (8) 751 41 11
Telex: 19270 PROS

SWITZERLAND

Emitec AG
Hinterbergstrasse 9
6330 CHAM
Switzerland
Telephone: [+41] 41 748 60 10
Fax: [+41] 41 748 50 55

TAIWAN

HWA Jeat Corp.
6F-3, No. 181 Fu-Hsing N. Road
TAIPEI 10441
Taiwan
Republic of China
Telephone: [+886] (2) 719 3216
Fax: [+886] (2) 719 2886
Email: hjctwn@ms2.hinet.net

THAILAND

Yip in Tsoi & Jacks Ltd
523 Mahaprutharam Road
P.O. Box 2611
BANGKOK 10501
Thailand
Telephone: [+66] (2) 639 0369
Fax: [+66] (2) 236 5693
Telex: 82929 YIPJACKS TH.

TURKEY

Orko Mumessillik
Tunus Caddesi 85/9
06680 Kavaklidere
ANKARA
Turkey
Telephone: [+90] (312) 426 6047
Fax: [+90] (312) 426 6180
Telex: 44498 OKAS TR

UAE ABU DHABI

Bahwan Trading Company (LLC)
P O Box 41175
Abu Dhabi
Telephone: [+971] (2) 768909
Fax: [+971] (2) 768907

UAE DUBAI

Bahwan Trading Company (LLC)
P O Box 25173
Dubai (Head Office)
Telephone: [+971] (4) 553883
Fax: [+971] (4) 553776

UNITED KINGDOM

Marconi Instruments Ltd
The Airport
LUTON
Bedfordshire LU2 9NS
United Kingdom
Telephone: [+44] (1582) 33866
Fax: [+44] (1582) 417573

URUGUAY

Telefax TelecomunicacionesColonia 968
11100 Montevideo
Uruguay
Telephone: [+598] (2) 920082
Fax: [+598] (2) 921581

USA

Marconi Instruments Inc.
13600 Heritage Parkway
Fort Worth
Texas 76117
USA
Telephone: [+1] (817) 224 9200
Fax: [+1] (817) 244 9201

VENEZUELA

Marcoms De Venezuela C.A.
Edif Exagon Piso 5 OFC 57
Av Romulo Gallegos El Marques
Apartado 76702
CARACAS 1070A
Venezuela
Telephone: [+58] (2) 242 1110 or [+58] (2) 242 1590
Fax: [+58] (2) 238 0068 or [+58] (2)242 0241
Telex: 23049 DHMAR VC

VIETNAM

East Asiatic Company Ltd A/S,
Ho Chi Minh City Representative Office
17 Ton Duc Thang Street, 2nd Floor
HO CHI MINH CITY
Vietnam
Telephone: [+84] (8) 8290499
Fax: [+84] (8) 8230014

ZIMBABWE

Measuretest cc
Unit 16 Villa Vlencia Office Park
Monument Road
Glen Marais
Kempton Park
Gauteng
South Africa
Telephone: [+27] (11) 396 4502/4/5
Fax: [+27] (11) 396 4510

www.manualsplus.com
1033666